chanhvinh.com

T4 Series

SNUBBERLESS™ & LOGIC LEVEL

4A TRIACs

MAIN FEATURES:

Symbol	Value	Unit
$I_{T(RMS)}$	4	A
V_{DRM}/V_{RRM}	600 to 800	V
$I_{GTT\ (Q_1)}$	5 to 35	mA

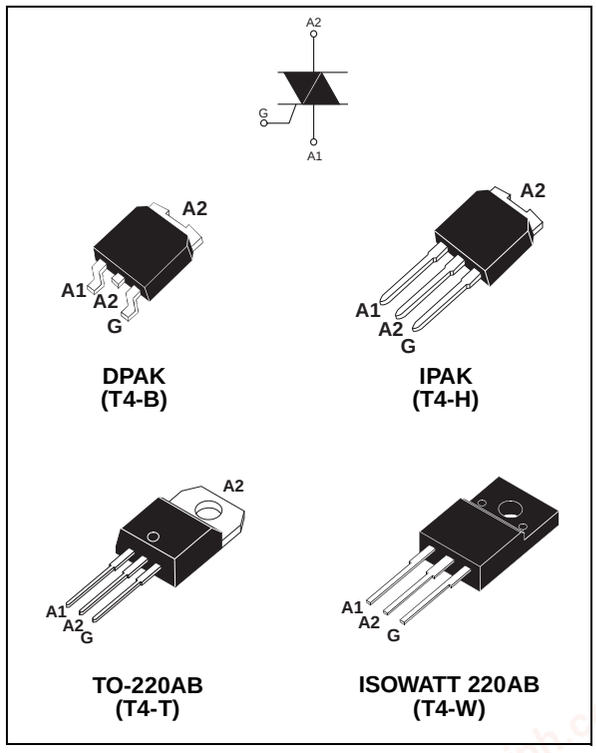

DESCRIPTION

Based on ST's Snubberless / Logic level technology providing high commutation performances, the T4 series is suitable for use on AC inductive loads. They are recommended for applications using universal motors, electrovalves.... such as kitchen aid equipments, power tools, dishwashers,...
Available in a fully insulated package, the T4...-...W version complies with UL standards (ref. E81734).

ABSOLUTE MAXIMUM RATINGS

Symbol	Parameter			Value	Unit
$I_{T(RMS)}$	RMS on-state current (full sine wave)	DPAK / IPAK TO-220AB	Tc = 110°C	4	A
		ISOWATT 220AB	Tc = 105°C		
I_{TSM}	Non repetitive surge peak on-state current (full cycle, Tj initial = 25°C)	F = 50 Hz	t = 20 ms	30	A
		F = 60 Hz	t = 16.7 ms	31	
I^2t	I^2t Value for fusing	tp = 10 ms		5.1	A^2s
dI/dt	Critical rate of rise of on-state current I_G = 2 x I_{GT} , tr ≤ 100 ns	F = 120 Hz	Tj = 125°C	50	A/µs
I_{GM}	Peak gate current	tp = 20 µs	Tj = 125°C	4	A
$P_{G(AV)}$	Average gate power dissipation		Tj = 125°C	1	W
T_{stg} T_j	Storage junction temperature range Operating junction temperature range			- 40 to + 150 - 40 to + 125	°C

chanhvinh.com

ELECTRICAL CHARACTERISTICS (Tj = 25°C, unless otherwise specified)

Symbol	Test Conditions	Quadrant		T4			Unit
				T405	T410	T435	
I_{GT} (1)	V_D = 12 V R_L = 30 Ω	I - II - III	MAX.	5	10	35	mA
V_{GT}		I - II - III	MAX.	1.3			V
V_{GD}	$V_D = V_{DRM}$ R_L = 33 kΩ Tj = 125°C	I - II - III	MIN.	0.2			V
I_H (2)	I_T = 100 mA		MAX.	10	15	35	mA
I_L	$I_G = 1.2\ I_{GT}$	I - III	MAX.	10	25	50	mA
		II		15	30	60	
dV/dt (2)	V_D = 67 %V_{DRM} gate open Tj = 125°C		MIN.	20	40	400	V/µs
(dI/dt)c (2)	(dV/dt)c = 0.1 V/µs Tj = 125°C		MIN.	1.8	2.7	-	A/ms
	(dV/dt)c = 10 V/µs Tj = 125°C			0.9	2.0	-	
	Without snubber Tj = 125°C			-	-	2.5	

STATIC CHARACTERISTICS

Symbol	Test Conditions			Value	Unit
V_{TM} (2)	I_{TM} = 5.5 A tp = 380 µs	Tj = 25°C	MAX.	1.6	V
V_{to} (2)	Threshold voltage	Tj = 125°C	MAX.	0.9	V
R_d (2)	Dynamic resistance	Tj = 125°C	MAX.	120	mΩ
I_{DRM}	$V_{DRM} = V_{RRM}$	Tj = 25°C	MAX.	5	µA
I_{RRM}		Tj = 125°C		1	mA

Note 1: minimum IGT is guaranted at 5% of IGT max.

Note 2: for both polarities of A2 referenced to A1

THERMAL RESISTANCES

Symbol	Parameter			Value	Unit
$R_{th(j-c)}$	Junction to case (AC)		DPAK IPAK TO-220AB	2.6	°C/W
			ISOWATT220AB	4.0	
$R_{th(j-a)}$	Junction to ambient	S = 0.5 cm^2	DPAK	70	°C/W
			TO-220AB ISOWATT220AB	60	
			IPAK	100	

S = Copper surface under tab

chanhvinh.com

PRODUCT SELECTOR

Part Number	Voltage (xxx)			Sensitivity	Type	Package
	600 V	700 V	800 V			
T405-xxxB	X	X	X	5 mA	Logic level	DPAK
T405-xxxH	X	X	X	5 mA	Logic level	IPAK
T405-xxxT	X	X	X	5 mA	Logic level	TO-220AB
T405-xxxW	X	X	X	5 mA	Logic level	ISOWATT220AB
T410-xxxB	X	X	X	10 mA	Logic level	DPAK
T410-xxxH	X	X	X	10 mA	Logic level	IPAK
T410-xxxT	X	X	X	10 mA	Logic level	TO-220AB
T410-xxxW	X	X	X	10 mA	Logic level	ISOWATT220AB
T435-xxxB	X	X	X	35 mA	Snubberless	DPAK
T435-xxxH	X	X	X	35 mA	Snubberless	IPAK
T435-xxxT	X	X	X	35 mA	Snubberless	TO-220AB
T435-xxxW	X	X	X	35 mA	Snubberless	ISOWATT220AB

ORDERING INFORMATION

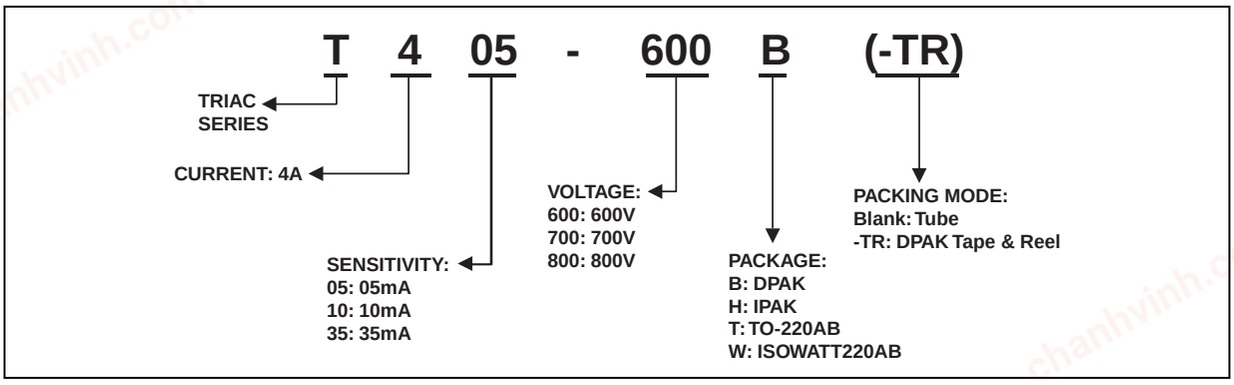

OTHER INFORMATION

Part Number	Marking	Weight	Base quantity	Packing mode
T4xx-yyyB	T4xxyyyB	0.3 g	75	Tube
T4xx-yyyB-TR	T4xxyyyB	0.3 g	2500	Tape & reel
T4xx-yyyH	T4xxyyy	0.4 g	75	Tube
T4xx-yyyT	T4xxyyyT	2.3 g	50	Tube
T4xx-yyyW	T4xxyyyW	2.1 g	50	Tube

Note: xx = sensitivity, yyy = voltage

chanhvinh.com

Fig. 1: Maximum power dissipation versus RMS on-state current (full cycle).

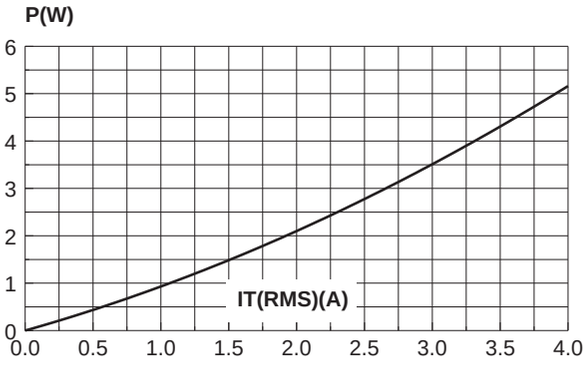

Fig. 2-1: RMS on-state current case versus temperature (full cycle).

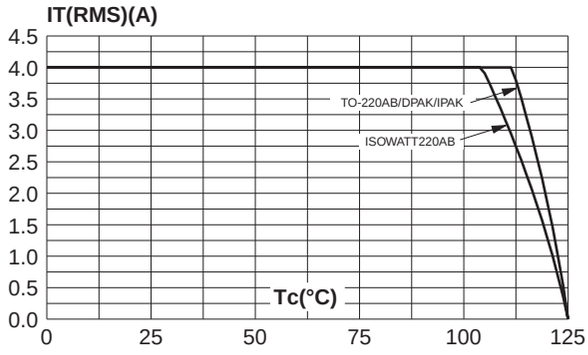

Fig. 2-2: RMS on-state current versus ambient temperature (printed circuit FR4, copper thickness: 35µm),full cycle.

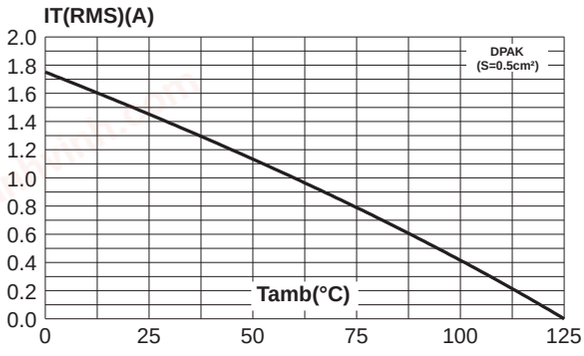

Fig. 3: Relative variation of thermal impedance versus pulse duration.

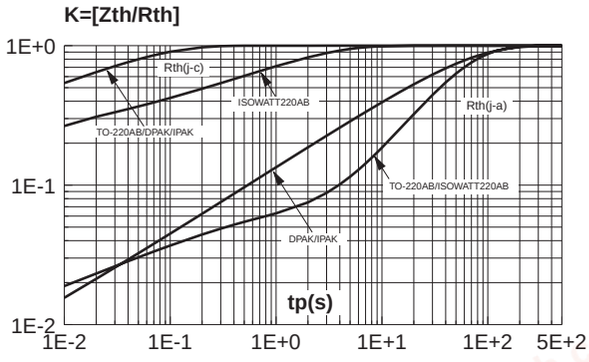

Fig. 4: Relative variation of gate trigger current, holding current and latching current versus junction temperature (typical values).

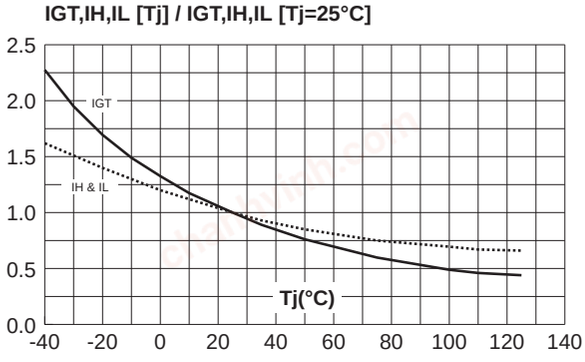

Fig. 5: Surge peak on-state current versus number of cycles.

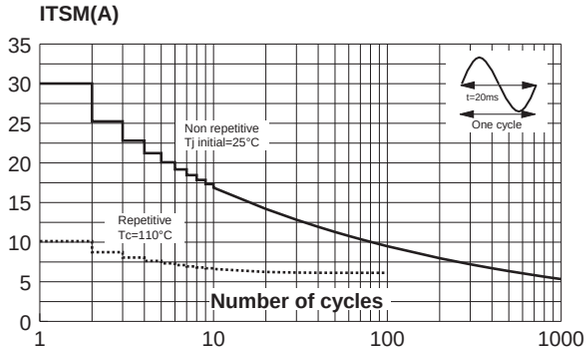

chanhvinh.com

Fig. 6: Non-repetitive surge peak on-state current for a sinusoidal pulse with width tp < 10ms, and corresponding value of I²t.

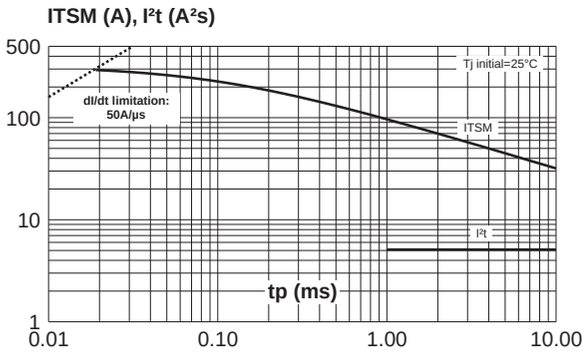

Fig. 7: On-state characteristics (maximum values).

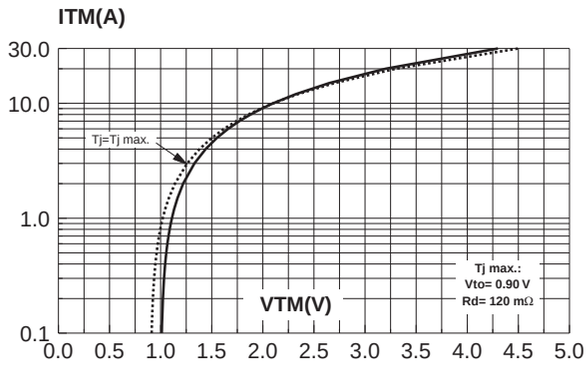

Fig. 8: Relative variation of critical rate of decrease of main current versus (dV/dt)c (typical values).

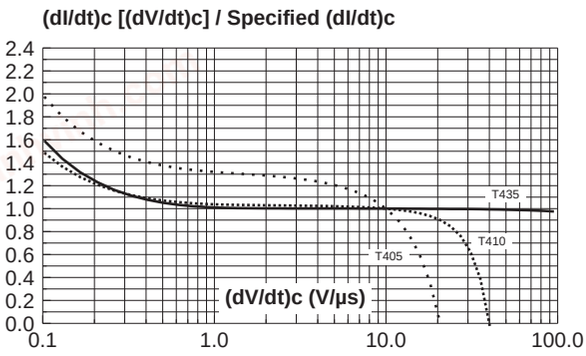

Fig. 9: Relative variation of critical rate of decrease of main current versus junction temperature.

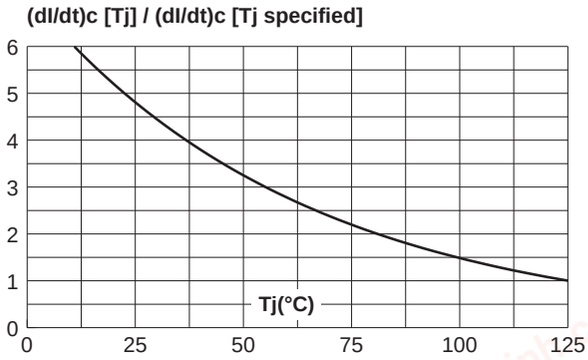

Fig. 10: DPAK thermal resistance junction to ambient versus copper surface under tab (printed circuit board FR4, copper thickness: 35µm).

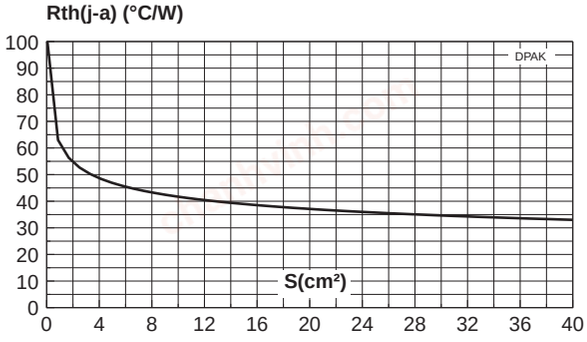

chanhvinh.com

PACKAGE MECHANICAL DATA

DPAK (Plastic)

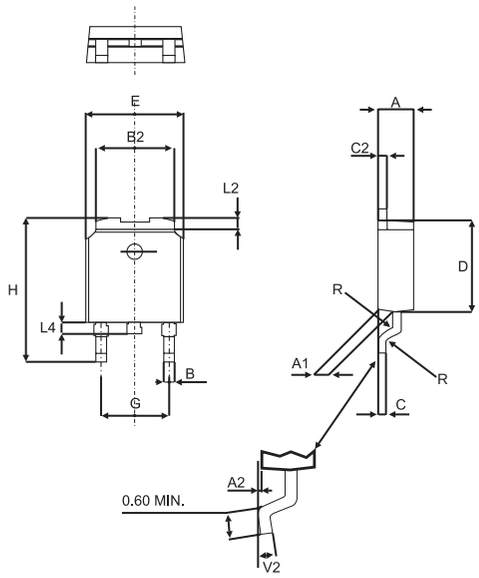

REF.	DIMENSIONS			
	Millimeters		Inches	
	Min.	Max	Min.	Max.
A	2.20	2.40	0.086	0.094
A1	0.90	1.10	0.035	0.043
A2	0.03	0.23	0.001	0.009
B	0.64	0.90	0.025	0.035
B2	5.20	5.40	0.204	0.212
C	0.45	0.60	0.017	0.023
C2	0.48	0.60	0.018	0.023
D	6.00	6.20	0.236	0.244
E	6.40	6.60	0.251	0.259
G	4.40	4.60	0.173	0.181
H	9.35	10.10	0.368	0.397
L2	0.80 typ.		0.031 typ.	
L4	0.60	1.00	0.023	0.039
R	0.2 typ.		0.007 typ.	
V2	0°	8°	0°	8°

FOOTPRINT DIMENSIONS (in millimeters)

DPAK (Plastic)

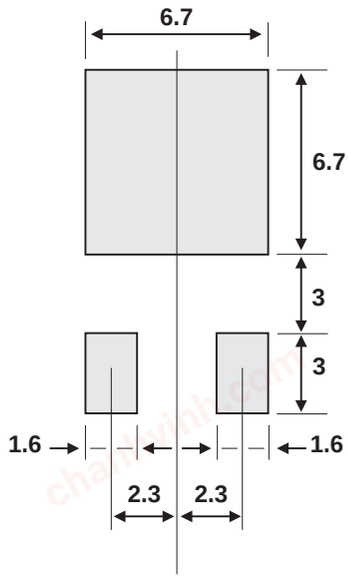

chanhvinh.com

PACKAGE MECHANICAL DATA

ISOWATT220AB (Plastic)

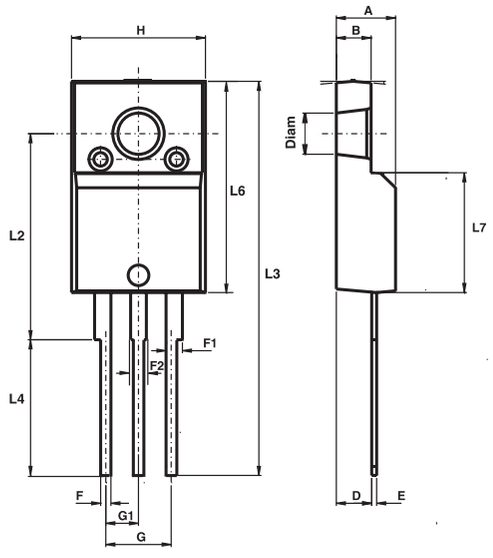

REF.	DIMENSIONS			
	Millimeters		Inches	
	Min.	Max.	Min.	Max.
A	4.40	4.60	0.173	0.181
B	2.50	2.70	0.098	0.106
D	2.50	2.75	0.098	0.108
E	0.40	0.70	0.016	0.028
F	0.75	1.00	0.030	0.039
F1	1.15	1.70	0.045	0.067
F2	1.15	1.70	0.045	0.067
G	4.95	5.20	0.195	0.205
G1	2.40	2.70	0.094	0.106
H	10.00	10.40	0.394	0.409
L2	16.00 typ.		0.630 typ.	
L3	28.60	30.60	1.125	1.205
L4	9.80	10.60	0.386	0.417
L6	15.90	16.40	0.626	0.646
L7	9.00	9.30	0.354	0.366
Diam	3.00	3.20	0.118	0.126

PACKAGE MECHANICAL DATA

TO-220AB (Plastic)

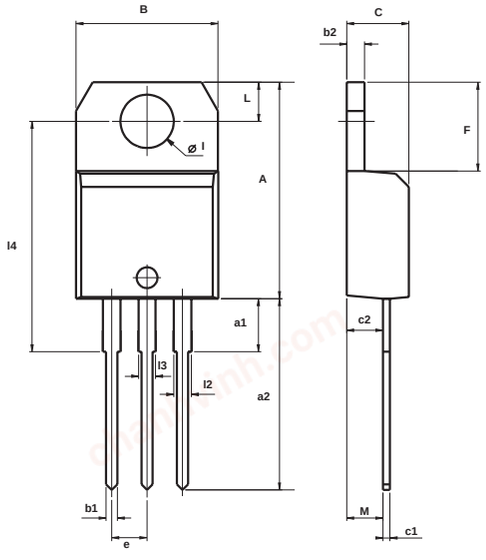

REF.	DIMENSIONS					
	Millimeters			Inches		
	Min.	Typ.	Max.	Min.	Typ.	Max.
A	15.20		15.90	0.598		0.625
a1		3.75			0.147	
a2	13.00		14.00	0.511		0.551
B	10.00		10.40	0.393		0.409
b1	0.61		0.88	0.024		0.034
b2	1.23		1.32	0.048		0.051
C	4.40		4.60	0.173		0.181
c1	0.49		0.70	0.019		0.027
c2	2.40		2.72	0.094		0.107
e	2.40		2.70	0.094		0.106
F	6.20		6.60	0.244		0.259
I	3.75		3.85	0.147		0.151
I4	15.80	16.40	16.80	0.622	0.646	0.661
L	2.65		2.95	0.104		0.116
I2	1.14		1.70	0.044		0.066
I3	1.14		1.70	0.044		0.066
M		2.60			0.102	

chanhvinh.com

PACKAGE MECHANICAL DATA

IPAK (Plastic)

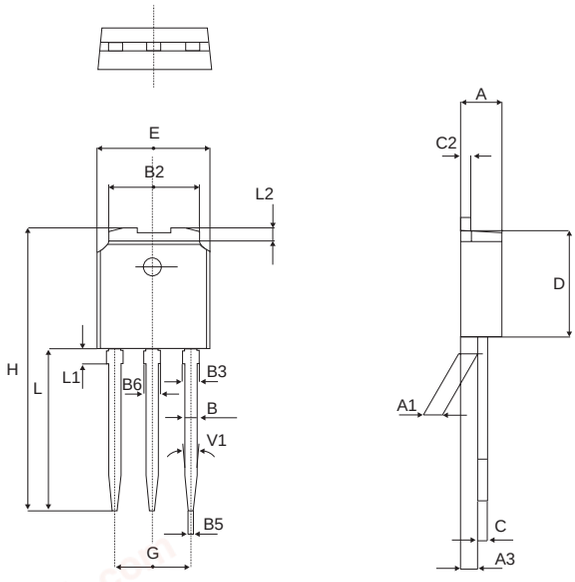

REF.	DIMENSIONS					
	Millimeters			Inches		
	Min.	Typ.	Max.	Min.	Typ.	Max.
A	2.2		2.4	0.086		0.094
A1	0.9		1.1	0.035		0.043
A3	0.7		1.3	0.027		0.051
B	0.64		0.9	0.025		0.035
B2	5.2		5.4	0.204		0.212
B3			0.85			0.033
B5		0.3			0.035	
B6			0.95			0.037
C	0.45		0.6	0.017		0.023
C2	0.48		0.6	0.019		0.023
D	6		6.2	0.236		0.244
E	6.4		6.6	0.252		0.260
G	4.4		4.6	0.173		0.181
H	15.9		16.3	0.626		0.641
L	9		9.4	0.354		0.370
L1	0.8		1.2	0.031		0.047
L2		0.8	1		0.031	0.039
V1		10°			10°	

Information furnished is believed to be accurate and reliable. However, STMicroelectronics assumes no responsibility for the consequences of use of such information nor for any infringement of patents or other rights of third parties which may result from its use. No license is granted by implication or otherwise under any patent or patent rights of STMicroelectronics. Specifications mentioned in this publication are subject to change without notice. This publication supersedes and replaces all information previously supplied. STMicroelectronics products are not authorized for use as critical components in life support devices or systems without express written approval of STMicroelectronics.

© The ST logo is a registered trademark of STMicroelectronics

© 2003 STMicroelectronics - Printed in Italy - All Rights Reserved

STMicroelectronics GROUP OF COMPANIES
Australia - Brazil - China - Finland - France - Germany - Hong Kong - India - Italy - Japan - Malaysia
Malta - Morocco - Singapore - Spain - Sweden - Switzerland - United Kingdom - U.S.A

http://www.st.com