chanhvinh.com

life.augmented

STSPIN32G0251

Datasheet

250 V three-phase BLDC controller with embedded STM32 MCU

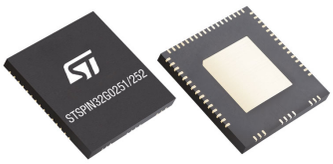

QFN 10x10 72L pitch 0.5

STSPIN

Product status link
STSPIN32G0251

Product label
SUSTAINABLE TECHNOLOGY

Features

- Three-phase gate drivers
  - High-voltage rail up to 250 V
  - dV/dt transient immunity ±50 V/ns
  - Gate driving voltage range from 9 V to 20 V
- Driver current capability:
  - 200/350 mA source/sink current @ 25 °C
- 32-bit ARM® Cortex®-M0+ MCU core:
  - Up to 64 MHz clock frequency
  - 8-Kbyte SRAM with hardware parity check
  - 64-Kbyte flash memory with protection and securable area
  - CRC calculation unit
- Up to 32 general-purpose I/O ports (GPIO)
- 1 advanced timer for motor control, 16-bit with up to 6 x PWM channels
- 5 general-purpose timers (1x 32-bit)
- 2 low-power timers
- 12-bit ADC converter (up to 15 channels) with 2 MSps conversion rate
- 5-channel DMA controller with flexible mapping
- Internal high precision voltage reference
- Full set of interfaces: 2x I^2C, 2x SPI, 3x UART and 1x low-power UART
- Matched propagation delay for all channels
- Integrated bootstrap diodes
- Comparator for fast overcurrent protection
- UVLO, interlocking, and deadtime functions
- Smart shutdown (smartSD) function
- Standby mode for low power consumption
- On-chip debug support via SWD
- Extended temperature range: -40 to +125 °C
- QFN 10x10 72L pitch 0.5 creepage 1.8 mm package

Applications

- Three-phase motor drivers
- Inverters
- Industrial appliances and fans

chanhvinh.com

1 Description

The STSPIN32G0251 is a system-in-package providing an integrated solution suitable for driving three-phase applications.

It embeds an MCU (STM32G031x8x3) featuring an Arm 32-bit Cortex®-M0+ CPU and a 250 V triple half-bridge gate driver, able to drive N-channel power MOSFETs or IGBTs.

A comparator featuring an advanced smartSD function is integrated in the device, ensuring fast and effective protection against overload and overcurrent.

The high-voltage bootstrap diodes are also integrated, as well as anti cross-conduction (interlocking), deadtime, and UVLO protection on both the lower and upper driving sections, which prevents the power switches from operating in low efficiency or dangerous conditions. Matched delays between low and high-side sections guarantee no cycle distortion.

The integrated MCU is based on the high-performance 32-bit Arm Cortex®-M0+ core, operating at a frequency up to 64 MHz and featuring a memory protection unit (MPU), which enhances the application's security.

This microcontroller represents the perfect choice for advanced motor control applications thanks to the comprehensive set of features such as the 12-bit ADC, an internal voltage reference buffer, one general-purpose 32-bit timer, one 16-bit PWM timer dedicated to motor control, four general-purpose 16-bit timers, two 16-bit low-power timers, a 5-channel DMA that performs data transfers between memory-mapped peripherals and/or memories to offload the CPU.

It also embeds high-speed memories (64 KB of flash memory, and 8 KB of SRAM) with several protection mechanisms, up to 32 available GPIOs, main interfaces (I^2C, SPI, and UART), a comprehensive set of power-saving modes, and an analog independent supply input for ADC.

Such a feature-rich microcontroller allows running sensorless or sensored Field Oriented Control (FOC) with one, two or three shunts or a more traditional six-step control mode.

The STSPIN32G0251 also features a full set of protections and an extended temperature range (-40 °C to +125 °C), guaranteeing stable operation even in the most demanding industrial applications. An SWD interface is provided for microcontroller firmware programming and debugging.

chanhvinh.com

2 Block diagram

Figure 1. **STSPIN32G0251 SiP block diagram**

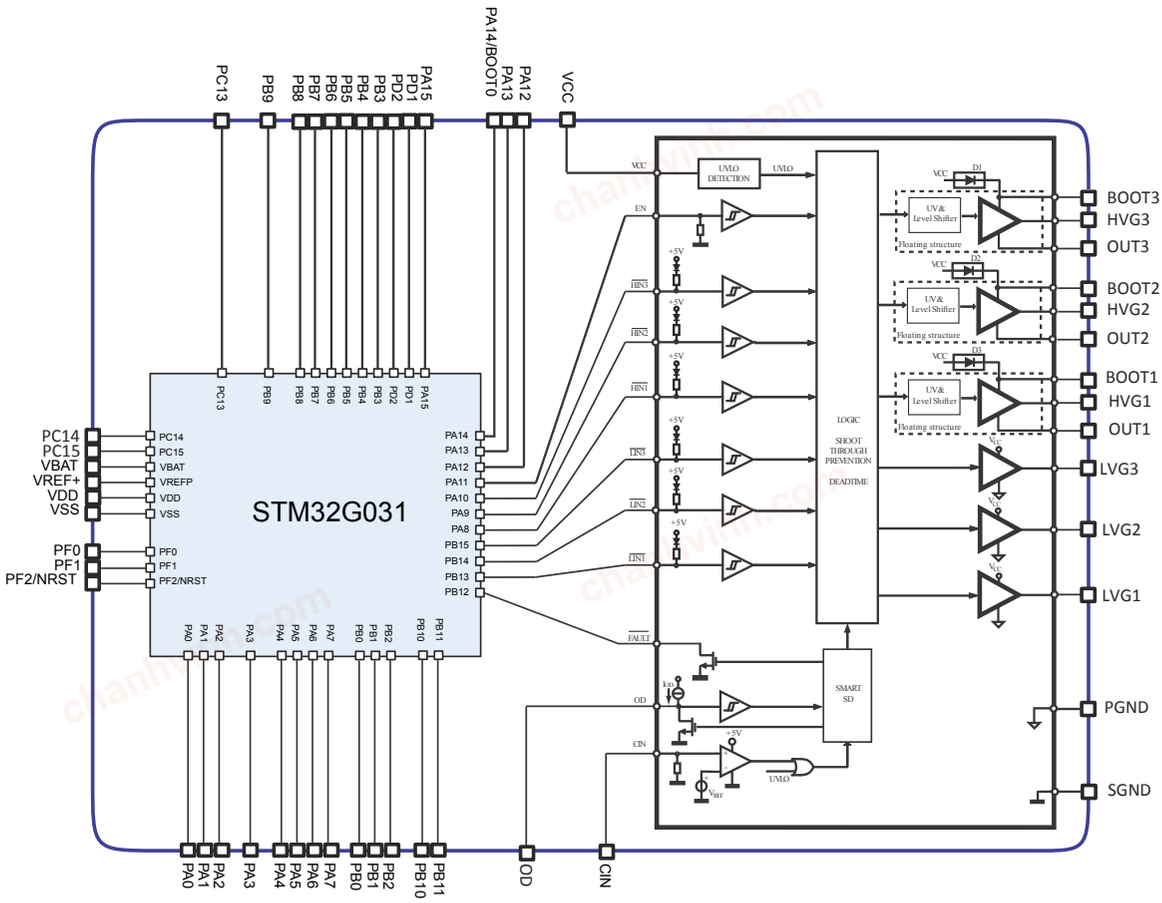

chanhvinh.com

3 Pin description and connection diagram

Figure 2. **STSPIN32G0251 pin connection (top view)**

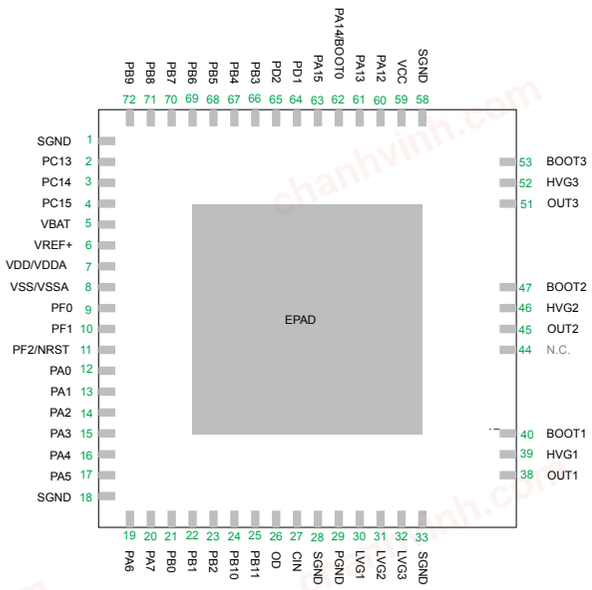

Table 1. **Legend/abbreviations used in the pin description table**

Name		Symbol	Definition
Pin name		Unless otherwise specified in brackets below the pin name, the pin function during and after reset is the same as the actual pin name	
Pin type		AO	Gate driver analog output
		P	Gate driver supply\GND pin
		S	Supply pin
		I	Input-only pin
		I/O	Input / output pin
I/O structure		FT	5 V-tolerant I/O
		RST	Bidirectional reset pin with embedded weak pull-up resistor
		FT_a	I/O, with analog switch function
		FT_f	I/O, Fm+ capable
		FT_e	I/O, with switchable diode to VDD
Notes		Unless otherwise specified, all I/Os are set as floating inputs during and after reset	
Pin functions	Alternate functions	Functions selected through GPIOx_AFR registers	
	Additional functions	Functions directly selected/enabled through peripheral registers	

chanhvinh.com

Table 2. Pin description

Pin N.	Name	Type	MCU	Driver	Function
1	SGND	P		Y	Driver signal ground
2	PC13	I/O - FT	Y		TIM1_BK, TAMP_IN1, RTC_TS, RTC_OUT1, WKUP2
3	PC14	I/O - FT	Y		TIM1_BK2, OSC32_IN
4	PC15	I/O - FT	Y		OSC32_EN, OSC_EN, OSC32_OUT
5	VBAT	S	Y		VBAT
6	VREF+	S	Y		VREF_OUT
7	VDD/VDDA	S	Y		
8	VSS/VSSA	S	Y		
9	PF0	I/O - FT	Y		TIM14_CH1, OSC_IN
10	PF1	I/O - FT	Y		OSC_EN, OSC_OUT
11	PF2/NRST	I/O	Y		MCO, NRST (default functionality)
12	PA0	I/O - FT_a	Y		SPI2_SCK, USART2_CTS, TIM2_CH1_ETR, LPTIM1_OUT, ADC_IN0, TAMP_IN2, WKUP1
13	PA1	I/O - FT_ea	Y		SPI1_SCK/I2S1_CK, USART2_RTS_DE_CK, TIM2_CH2, I2C1_SMBA, EVENTOUT, ADC_IN1
14	PA2	I/O - FT_a	Y		SPI1_MOSI/I2S1_SD, USART2_TX, TIM2_CH3, LPUART1_TX, ADC_IN2, WKUP4, LSCO
15	PA3	I/O - FT_ea	Y		SPI2_MISO, USART2_RX, TIM2_CH4, LPUART1_RX, EVENTOUT, ADC_IN3
16	PA4	I/O - FT_a	Y		SPI1_NSS/I2S1_WS, SPI2_MOSI, TIM14_CH1, LPTIM2_OUT, EVENTOUT, ADC_IN4, RTC_OUT2
17	PA5	I/O - FT_ea	Y		SPI1_SCK/I2S1_CK, TIM2_CH1_ETR, LPTIM2_ETR, EVENTOUT, ADC_IN5
18	SGND	P		Y	Driver signal ground
19	PA6	I/O - FT_ea	Y		SPI1_MISO/I2S1_MCK, TIM3_CH1, TIM1_BK, TIM16_CH1, LPUART1_CTS, ADC_IN6
20	PA7	I/O - FT_a	Y		SPI1_MOSI/I2S1_SD, TIM3_CH2, TIM1_CH1N, TIM14_CH1, TIM17_CH1, ADC_IN7
21	PB0	I/O - FT_ea	Y		SPI1_NSS/I2S1_WS, TIM3_CH3, TIM1_CH2N, LPTIM1_OUT, ADC_IN8
22	PB1	I/O - FT_ea	Y		TIM14_CH1, TIM3_CH4, TIM1_CH3N, LPTIM2_IN1, LPUART1_RTS_DE, EVENTOUT, ADC_IN9
23	PB2	I/O - FT_ea	Y		SPI2_MISO, LPTIM1_OUT, EVENTOUT, ADC_IN10
24	PB10	I/O - FT_fa	Y		LPUART1_RX, TIM2_CH3, SPI2_SCK, I2C2_SCL, ADC_IN11
25	PB11	I/O - FT_fa	Y		SPI2_MOSI, LPUART1_TX, TIM2_CH4, I2C2_SDA, ADC_IN15
26	OD	AO		Y	Open drain comparator output
27	CIN	I		Y	Comparator positive input
28	SGND	P		Y	Driver signal ground
29	PGND	P		Y	Driver power ground
30	LVG1 (1)	AO		Y	Phase 1 low-side driver output
31	LVG2 (1)	AO		Y	Phase 2 low-side driver output
32	LVG3 (1)	AO		Y	Phase 3 low-side driver output
33	SGND	P		Y	Driver signal ground
38	OUT1	P		Y	Phase 1 high-side (floating) common voltage

chanhvinh.com

Pin N.	Name	Type	MCU	Driver	Function
39	HVG1 (1)	AO		Y	Phase 1 high-side driver output
40	BOOT1	P		Y	Phase 1 bootstrap supply voltage
44	NC				Not connected
45	OUT2	P		Y	Phase 2 high-side (floating) common voltage
46	HVG2 (1)	AO		Y	Phase 2 high-side driver output
47	BOOT2	P		Y	Phase 2 bootstrap supply voltage
51	OUT3	P		Y	Phase 3 high-side (floating) common voltage
52	HVG3 (1)	AO		Y	Phase 3 high-side driver output
53	BOOT3	P		Y	Phase 3 bootstrap supply voltage
58	SGND	P		Y	Driver signal ground
59	VCC	P		Y	Driver power supply
60	PA12	I/O - FT_f	Y		SPI1_MOSI/I2S1_SD, USART1_RTS_DE_CK, TIM1_ETR, I2S_CKIN, I2C2_SDA
61	PA13	I/O - FT_ea	Y		SWDIO, IR_OUT, EVENTOUT, ADC_IN17
62	PA14/BOOT0	I/O - FT_a	Y		SWCLK, USART2_TX, EVENTOUT, ADC_IN18, BOOT0
63	PA15	I/O - FT	Y		SPI1_NSS/I2S1_WS, USART2_RX, TIM2_CH1_ETR, EVENTOUT
64	PD1	I/O - FT	Y		EVENTOUT, SPI2_SCK, TIM17_CH1
65	PD2	I/O - FT	Y		TIM3_ETR, TIM1_CH1N
66	PB3	I/O - FT	Y		SPI1_SCK/I2S1_CK, TIM1_CH2, TIM2_CH2, USART1_RTS_DE_CK, EVENTOUT
67	PB4	I/O - FT	Y		SPI1_MISO/I2S1_MCK, TIM3_CH1, USART1_CTS, TIM17_BK, EVENTOUT
68	PB5	I/O - FT	Y		SPI1_MOSI/I2S1_SD, TIM3_CH2, TIM16_BK, LPTIM1_IN1, I2C1_SMBA, WKUP6
69	PB6	I/O - FT_f	Y		USART1_TX, TIM1_CH3, TIM16_CH1N, SPI2_MISO, LPTIM1_ETR, I2C1_SCL, EVENTOUT
70	PB7	I/O - FT_f	Y		USART1 _RX, SPI2_MOSI, TIM17_CH1N, LPTIM1_IN2, I2C1_SDA, EVENTOUT, PVD_IN
71	PB8	I/O - FT_f	Y		SPI2_SCK, TIM16_CH1, I2C1_SCL, EVENTOUT
72	PB9	I/O - FT_f	Y		IR_OUT, TIM17_CH1, SPI2_NSS, I2C1_SDA, EVENTOUT
-	EPAD	P		Y	Exposed pad, internally connected to SGND

1. *The circuit guarantees less than 1 V on the LVG and HVG pins (at I_{sink} = 10 mA), with VCC > 3 V. This allows omitting the "bleeder" resistor connected between the gate and the source of the external MOSFETs normally used to hold the pin low. When the EN is set low, gate driver outputs are forced low and assure low impedance.*

chanhvinh.com

Table 3. STSPIN32G0251 MCU-Driver internal connections

MCU pad	Type	Controller pad	Function
PB12	I/O - FT_a	$\overline{\text{FAULT}}$	Gate driver fault output
PB13	I/O - FT_f	$\overline{\text{LIN1}}$	Gate driver low-side input driver 1
PB14	I/O - FT_f	$\overline{\text{LIN2}}$	Gate driver low-side input driver 2
PB15	I/O - FT	$\overline{\text{LIN3}}$	Gate driver low-side input driver 3
PA8	I/O - FT	$\overline{\text{HIN1}}$	Gate driver high-side input driver 1
PA9	I/O - FT_f	$\overline{\text{HIN2}}$	Gate driver high-side input driver 2
PA10	I/O - FT_f	$\overline{\text{HIN3}}$	Gate driver high-side input driver 3
PA11	I/O - FT_f	EN	Gate driver shutdown input

Note: Each unused GPIO inside the system-in-package should be configured in OUTPUT mode low level after startup by the software.

chanhvinh.com

4 Electrical data

4.1 Absolute maximum ratings

Each voltage referred to SGND unless otherwise specified.

Table 4. Absolute maximum ratings

Symbol	Parameter	Test condition	Min.	Max.	Unit
VCC	Power supply voltage		-0.3	21	V
V_{PGND}	Low-side driver ground		VCC – 21	VCC + 0.3	V
V_{PS} (1)	Low-side driver ground		-21	21	V
V_{OUT}	Output voltage		V_{BOOT} – 21	V_{BOOT} + 0.3	V
V_{BOOT}	Bootstrap voltage		-0.3	270	V
V_{HVG}	High-side gate output voltage		V_{OUT} – 0.3	V_{BOOT} + 0.3	V
V_{LVG}	Low-side gate output voltage		V_{PGND} – 0.3	VCC + 0.3	V
V_{CIN}	Comparator input voltage		-0.3	20	V
V_{OD}	Open-drain voltage (OD, FAULT)		-0.3	21	V
dV_{OUT}/dt	Common-mode transient immunity			50	V/ns
V_{IN}	MCU logic input voltage (2)	Input voltage on FT_xx	-0.3	VDD + 4.0 (3)	V
		Input voltage on any other pin	-0.3	4	V
I_{IO}	MCU I/O output current (2)	2	-25	15	mA
ΣI_{IO}	MCU I/O total output current (2)		-80	80	mA
V_{DD}, V_{DDA}, V_{BAT}	MCU main supply voltages		-0.3	4	V
V_{REF+}			-0.3	Min(V_{DD}+0.4, 4.0)	V
T_{STG}	Storage temperature		-55	150	°C
T_J	Junction temperature		-40	150	°C
P_{TOT}	Total power dissipation			4.5	W
ESD	Human Body Model		2		kV

1. *$V_{PS} = V_{PGND} - V_{SGND}$*
2. *For details refer to the Absolute maximum ratings section in the STM32G031x8x3 datasheet; all voltages are defined with respect to VSS.*
3. *To sustain a voltage higher than 4 V, the internal pull-up/pull-down resistors must be disabled.*

chanhvinh.com

4.2 Recommended operating conditions

Table 5. Recommended operating conditions

Symbol	Parameter	Test condition	Min.	Typ.	Max.	Unit
VCC	Power supply voltage		$(V_{CCthON})_{MAX}$		20	V
V_{LS} (1)	Low-side driver supply voltage		4		20	V
V_{PS} (2)	Low-side driver ground		-5		5	V
V_{BO} (3)	Floating supply voltage		$(V_{BOthON})_{MAX}$		20	V
V_{CIN}	Comparator input voltage		0		15	V
V_{OUT}	DC output voltage		-10 (4)		230	V
F_{SW}	Maximum switching frequency (5)				800	kHz
V_{DD}	Standard MCU operating voltage		1.7 (6)		3.6	V
V_{DDA}	Analog supply voltage	For ADC operation	1.62		3.6	V
		For VREFBUF operation	2.4		3.6	V
V_{BAT}	Backup operating voltage		1.55		3.6	V
V_{REF+}	ADC positive reference voltage	$V_{DDA} \geq 2$ V	2		V_{DDA}	V
		$V_{DDA} < 2$ V	V_{DDA}			V
T_J	Operating junction temperature		-40		125	°C

1. *V_{LS} = VCC - V_{PGND}*
2. *V_{PS} = V_{PGND} - V_{SGND}*
3. *V_{BO} = V_{BOOT} - V_{OUT}*
4. *LVG off. VCC = 9 V. Logic is operational if V_{BOOT} > 5 V*
5. *Actual maximum F_{SW} depends on power dissipation.*
6. *When RESET is released, functionality is guaranteed down to V_{PDR} min.*

4.3 Thermal data

Table 6. Thermal data

Symbol	Parameter	Value	Unit
$R_{th(JA)}$	Thermal resistance junction to ambient (1)	22.4	°C/W

1. *JEDEC 2s2p PCB in still air.*

chanhvinh.com

5 Electrical characteristics

Table 7. Electrical characteristics

VCC = 15 V; VDD = 3.3 V; PGND = SGND; T_J = +25 °C, unless otherwise specified

Symbol	Parameter	Test condition	Min.	Typ.	Max.	Unit
Power supply and standby mode						
I_{QCCU}	VCC undervoltage quiescent supply current	VCC = 7 V; EN = 5 V; CIN = SGND		430	744	µA
I_{QCC}	VCC quiescent supply current	EN = 5 V; CIN = SGND LVG & HVG: OFF		950	1450	µA
VCC_{thON}	VCC UVLO turn-on threshold		8	8.5	9	V
VCC_{thOFF}	VCC UVLO turn-off threshold		7.5	8	8.5	V
VCC_{hys}	VCC UVLO threshold hysteresis		0.4	0.5	0.6	V
I_{DD} (1)	V_{DD} current consumption (Supply current in run mode, code executing from flash memory; all I/O pins are in analog input mode, all peripherals are disabled)	Range 1; PLL enabled; $f_{HCLK} = f_{PLLRCLK}$ = 64 MHz (2)		5.2		mA
		Range 2; PLL enabled; $f_{HCLK} = f_{PLLRCLK}$ = 16 MHz (2)		1.2		
I_{DDA} (1) (5)	V_{DDA} current consumption	ADC consumption f_S = 2.5 MSps		410		µA
		VREFBUF consumption I_{load} = 4 mA		35		
V_{BOR1}	Brownout reset threshold 1	V_{DD} rising edge	2.05	2.1	2.18	V
		V_{DD} falling edge	1.95	2.0	2.08	V
V_{hyst_BORH1}	V_{BOR1} hysteresis voltage			100		mV
High-side floating section supply						
I_{QBOU}	VBO undervoltage quiescent supply current	VCC = V_{BO} = 6.5 V; EN = 5 V; CIN = SGND		25	62	µA
I_{QBO}	V_{BO} quiescent supply current	V_{BO} = 15 V EN = 5 V; CIN = SGND LVG OFF; HVG = ON		84	150	µA
V_{BOthON}	V_{BO} UVLO turn-on threshold		7.5	8	8.5	V
$V_{BOthOff}$	V_{BO} UVLO turn-off threshold		7	7.5	8	V
V_{BOhys}	V_{BO} UVLO threshold hysteresis		0.4	0.5	0.6	V
I_{LK}	High-voltage leakage current	BOOT = HVG = OUT = 270 V			15	µA
R_{Dboot}	Bootstrap diode on-resistance	T_J = 25 °C, LVG ON		215	240	Ω

chanhvinh.com

Symbol	Parameter	Test condition		Min.	Typ.	Max.	Unit
Output driving buffers							
I_{SO}	Source peak current	T_J = 25 °C		160	200	300	mA
		Full temperature range (3)		130		350	mA
I_{SI}	Sink peak current	T_J = 25 °C		230	350	430	mA
		Full temperature range (3)		200		500	mA
R_{DSonON}	Source R_{DSon}	I = 10 mA, T_J = 25 °C		24	35	46	Ω
		I = 10 mA, Full temperature range (3)		20		56	Ω
$R_{DSonOFF}$	Sink R_{DSon}	I = 10 mA, T_J = 25 °C		11	16	21	Ω
		I = 10 mA, Full temperature range (3)		8		27	Ω
Logic inputs							
V_{il}	Low level logic threshold voltage	1.62 V < V_{DD} < 3.6 V				$0.3 \cdot V_{DD}$ (4)	V
						$0.39 \cdot V_{DD}$–0.06 (5)	V
V_{ih}	High level logic threshold voltage	1.62 V < V_{DD} < 3.6 V		$0.7 \cdot V_{DD}$ (4)			V
				$0.49 \cdot V_{DD}$+0.26 (5)			V
V_{hyst} (5)	Input hysteresis	FT_xx, NRST, 1.62 V < VDD < 3.6 V			200		mV
I_{lkg} (5)	Input leakage current	All except FT_e	0 < V_{IN} ≤ V_{DD}			± 70	nA
			V_{DD} ≤ V_{IN} ≤ V_{DD}+1 V			600 (6)	
			V_{DD}+1 V < V_{IN} ≤ 5.5 V			150 (6)	
		FT_e (7)	0 < V_{IN} ≤ V_{DD}			10	
V_{SSDh}	SmartSD restart threshold			3.5	4	4.3	V
V_{SSDl}	SmartSD unlatch threshold				0.56	0.75	V
Sense comparator and FAULT (8)							
V_{REF}	Internal voltage reference			410	460	510	mV
CIN_{hyst}	Comparator input hysteresis			40	70		mV
CIN_{PD}	Comparator input pull-down current	V_{CIN} = 1 V		7	10	13	µA
I_{OD}	OD internal current source			2.5	5	7.5	µA
R_{ON_OD}	OD on-resistance	I_{OD} = 16 mA		19	25	36	W
I_{SAT_OD}	OD saturation current	V_{OD} = 5 V			95		mA

chanhvinh.com

Symbol	Parameter	Test condition	Min.	Typ.	Max.	Unit
V_{FLOAT_OD}	OD floating voltage level	OD connected only to an external capacitance	4.4	4.8	5.2	V
I_{OL_OD}	OD low level sink current	V_{OD} = 400 mV	11	16	21	mA
R_{ON_F}	FAULT on-resistance	I_{FAULT} = 8 mA		50	100	Ω
I_{OL_F}	FAULT low level sink current	V_{FAULT} = 400 mV	4	8	12	mA
t_{OD}	Comparator propagation delay	R_{pu} = 100 kΩ to 5 V; 0 to 3.3 V voltage step on CIN 50% CIN to 90% OD		350	500	ns
t_{CIN-F}	Comparator triggering to FAULT	0 to 3.3 V voltage step on CIN; 50% CIN to 90% FAULT		350	500	ns
t_{CINoff}	Comparator triggering to high/low-side driver propagation delay	0 to 3.3 V voltage step on CIN 50% CIN to 90% LVG/HVG		360	510	ns
t_{FCIN}	Comparator input filter time		200	300	400	ns
SR	Slew rate	C_L = 1 nF; R_{pu} = 1 kΩ to 5 V; 90% to 10% OD	4	7.7	10.3	V/µs
Driver dynamic characteristics						
t_{on} (3)	High/low-side driver turn-on propagation delay	OUT = 0 V BOOT = VCC C_L = 1 nF V_{in} = 0 to 3.3 V see Figure 3		85		ns
t_{off} (3)	High/low-side driver turn-off propagation delay			85		ns
t_{EN} (3)	Enable to high/low-side driver propagation delay			345		ns
t_r	Rise time	C_L = 1 nF		120		ns
t_f	Fall time	C_L = 1 nF		50		ns

1. *The current consumption depends on the firmware loaded in the microcontroller. See STM32G031x8x3 datasheet.www.st.com*
2. *V_{DD} = 3.0 V for values in Typ. columns, all peripherals disabled, cache enabled, prefetch disabled for code. Prefetch and cache enabled when fetching from Flash memory.*
3. *Values provided by characterization, not tested.*
4. *Data tested in production.*
5. *Data guaranteed by design - not tested in production.*
6. *This value represents the pad leakage of the I/O itself. The total product pad leakage is provided by this formula: $I_{Total_Ileak_max}$ = 10 µA + [number of I/Os where V_{IN} is applied on the pad] x I_{lkg}(Max).*
7. *FT_e with diode enabled. Input leakage current of FT_e I/Os with the diode disabled is the same as standard I/Os.*
8. *The comparator is disabled when VCC is in UVLO condition.*

chanhvinh.com

Figure 3. **Propagation delay timing definition**

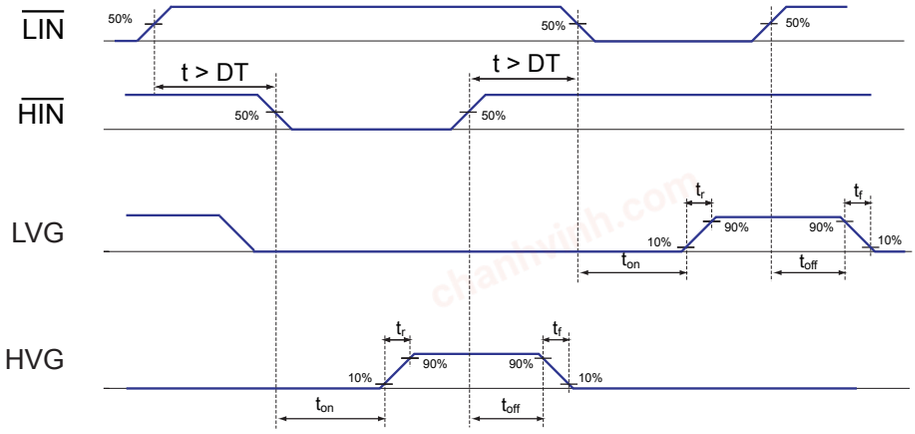

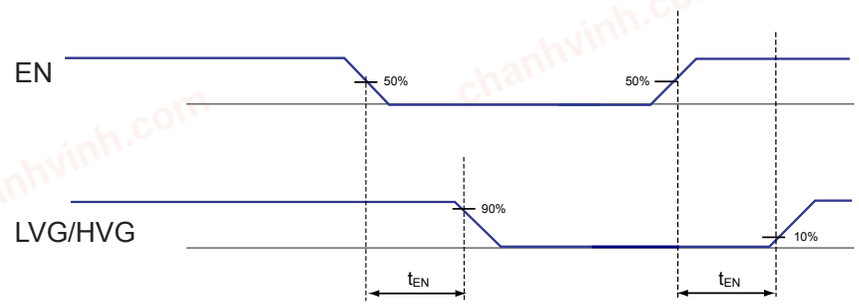

Figure 4. **Deadtime timing definitions**

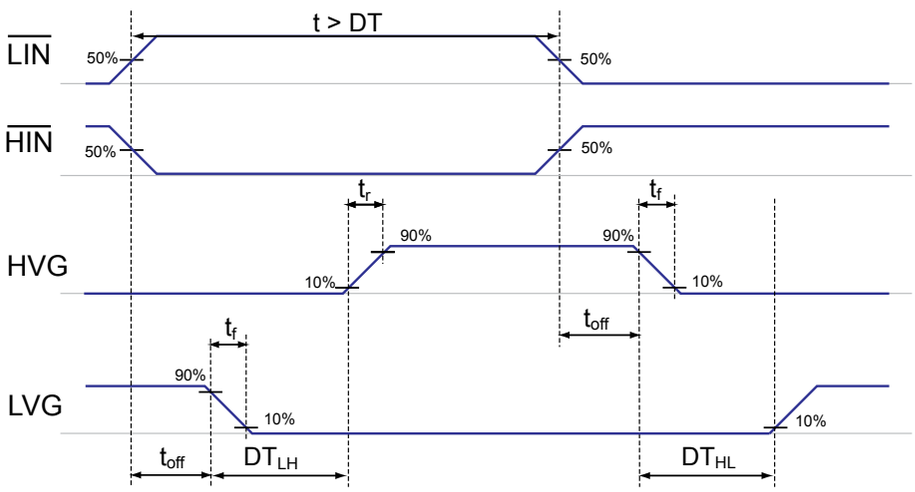

chanhvinh.com

Figure 5. **Deadtime and interlocking waveforms definition**

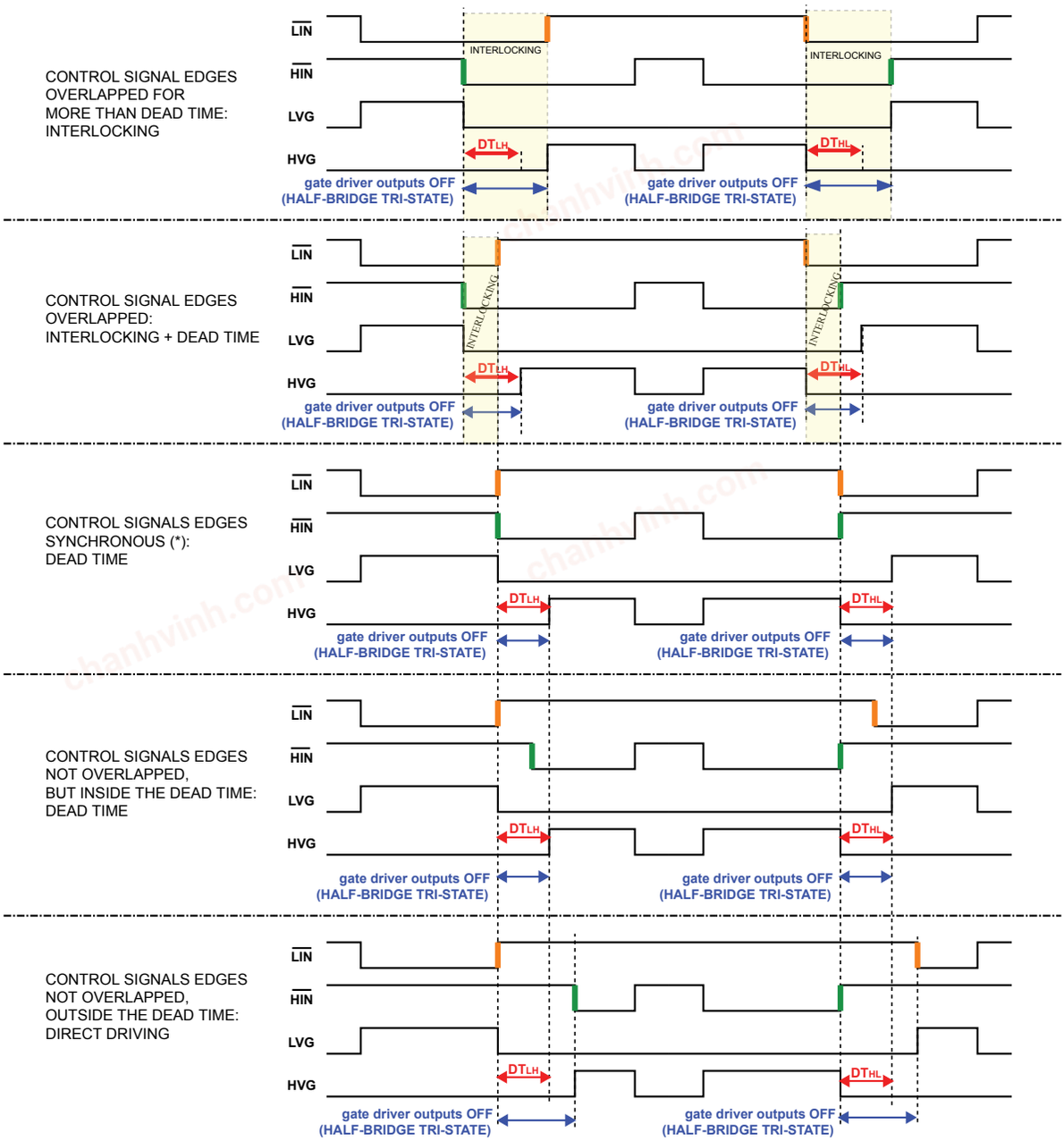

chanhvinh.com

6 Device description

The STSPIN32G0251 is a system-in-package providing an integrated solution suitable for driving high-voltage three-phase applications.

6.1 Gate driver

The STSPIN32G0251 integrates a triple half-bridge gate driver able to drive N-channel power MOSFETs or IGBTs. The high-side section is supplied by a bootstrapped voltage technique with an integrated bootstrap diode.

All the input lines are connected to a pull-down resistor with a typical value of 100 kΩ.

The high- and low-side outputs of the same half-bridge cannot be simultaneously driven high thanks to an integrated interlocking function.

6.1.1 Inputs and outputs

The device is controlled through the following logic inputs:

- EN: enable input, active high;
- LIN: low-side driver inputs, active low;
- HIN: high-side driver inputs, active low.

Table 8. Inputs truth table (applicable when the device is not in UVLO or SmartSD protection)

	Input pins			Output pins	
	EN	$\overline{\text{LIN}}$	$\overline{\text{HIN}}$	LVG	HVG
	L	X	X	Low	Low
	H	H	H	Low	Low
	H	L	H	**HIGH**	Low
	H	H	L	Low	**HIGH**
Interlocking	H	L	L	Low	Low

Note: X : Do not care.

The FAULT and OD pins are open-drain outputs. The FAULT signal is set low in case VCC UVLO is detected, or in case the SmartShutDown comparator triggers an event. It is only used to signal a UVLO or SmartSD activation to external circuits, and its state does not affect the behavior of other functions or circuits inside the driver. The OD behavior is explained in Section 6.1.5.

6.1.2 Deadtime

The deadtime feature, in companion with the interlocking feature, guarantees that driver outputs of the same channel are not high simultaneously and at least a DT time passes between the turn-off of one driver's output and the turn-on of the companion output of the same channel. If a deadtime longer than the internal DT is applied to the LIN and HIN inputs by the external controller, the internal DT is ignored and the outputs follow the deadtime determined by the inputs. Refer to Figure 3 for the deadtime and interlocking waveforms.

6.1.3 VCC UVLO protection

Undervoltage protection is available on VCC and BOOT supply pins. In order to avoid intermittent operation, a hysteresis sets the turn-off threshold with respect to the turn-on threshold.

When VCC voltage goes below the $V_{CCthOFF}$ threshold, all the outputs are switched off, both LVG and HVG. When VCC voltage reaches the V_{CCthON} threshold, the driver returns to normal operation and sets the LVG outputs according to actual input pin status; HVG is also set according to input pin status if the corresponding V_{BO} section is not in UVLO condition. The FAULT output is kept low when VCC is in UVLO condition. The following figures show some examples of typical operation conditions.

chanhvinh.com

Figure 6. **VCC power ON and UVLO, LVG timing**

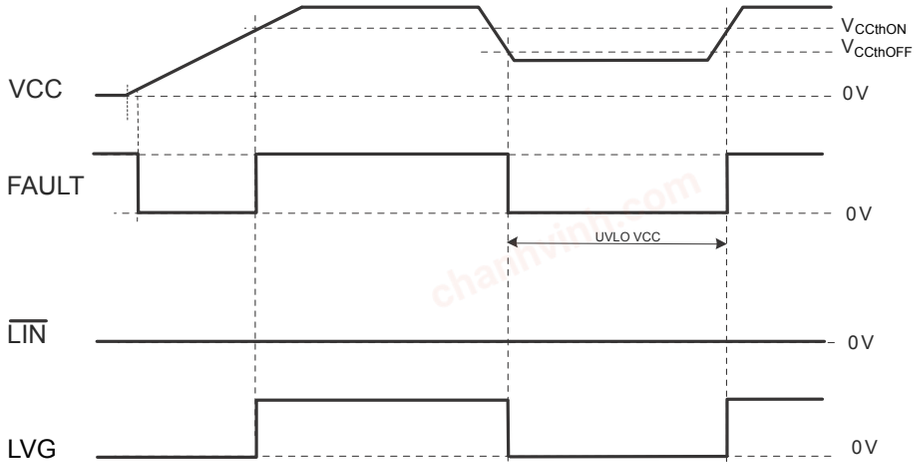

Figure 7. **VCC power ON and UVLO, HVG timing**

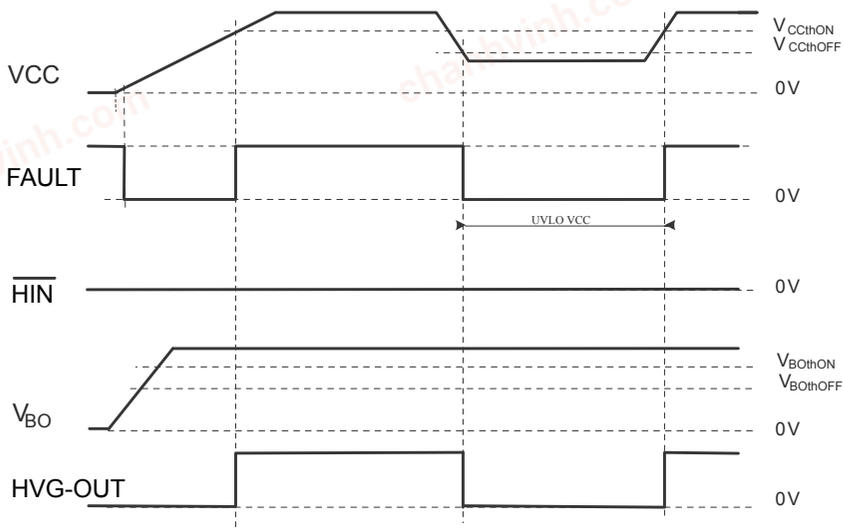

chanhvinh.com

6.1.4 V_{BO} UVLO protection

Dedicated undervoltage protection is available on each bootstrap section between BOOTx and OUTx supply pins. In order to avoid intermittent operation, a hysteresis sets the turn-off threshold with respect to the turn-on threshold.

When the V_{BO} voltage goes below the $V_{BOthOFF}$ threshold, the HVG output of the corresponding bootstrap section is switched off. When the V_{BO} voltage reaches the V_{BOthON} threshold, the device returns to normal operation and the output remains off up to the next input pin transition that requests HVG to turn on.

Figure 8. V_{BO} power-ON and UVLO timing

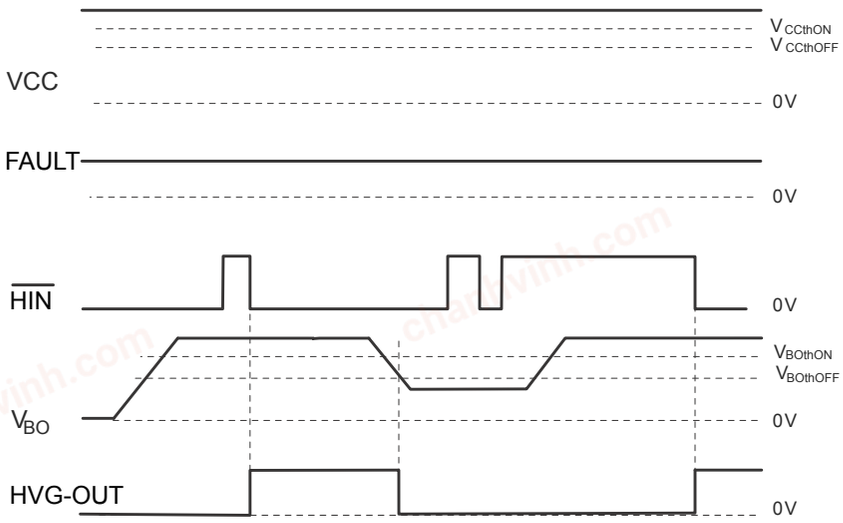

6.1.5 Comparator and Smart shutdown

The STSPIN32G0251 integrates a comparator committed to the fault protection function, thanks to the SmartShutDown (SmartSD) circuit.

The SmartSD architecture allows immediate turn-off of the gate driver outputs in the case of overload or overcurrent condition, by minimizing the propagation delay between the fault detection event and the actual output switch-off. In fact, the time delay between the fault detection and the output turn-off is not dependent on the value of the external components connected to the OD pin, which are only used to set the duration of disable time after the fault.

This provides the possibility to increase the duration of the output disable time after the fault event up to very large values without increasing the delay time of the protection. The duration of the disable time is determined by the values of the external capacitor C_{OD} and of the optional pull-up resistor connected to the OD pin.

The comparator has an internal voltage reference V_{REF} connected to the inverting input, while the non-inverting input is available on the CIN pin. The comparator's CIN input can be connected to an external shunt resistor in order to implement a fast and simple overcurrent protection function. The output signal of the comparator is filtered from glitches shorter than t_{FCIN} and then fed to the SmartSD logic.

If the impulse on the CIN pin is higher than V_{REF} and wider than t_{FCIN}, the SmartSD logic is triggered and immediately sets all of the driver outputs to low-level (OFF).

At the same time, FAULT is forced low to signal the event (for example to an MCU input) and OD starts to discharge the external C_{OD} capacitor used to set the duration of the output disable time of the fault event.

The FAULT pin is released and driver outputs restart following the input pins as soon as the *output disable time* expires.

chanhvinh.com

The overall disable time is composed of two phases:

- The OD *unlatch time* (t_1 in Figure 9), which is the time required to discharge the C_{OD} capacitor down to the V_{SSDl} threshold. The discharge starts as soon as the SSD comparator is triggered.
- The OD *Restart time* (t_2 in Figure 9), which is the time required to recharge the C_{OD} capacitor up to the V_{SSDh} threshold. The recharge of C_{OD} starts when the OD internal MOSFET is turned-off, which happens when the fault condition has been removed (CIN < V_{REF} - C_{INhyst}) and the voltage on OD reaches the V_{SSDl} threshold. This time normally covers most of the overall output disable time.

If no external pull-up is connected to OD, the external C_{OD} capacitor is discharged with a time constant defined by C_{OD} and the internal MOSFET's characteristic (Equation 1), and the Restart time is determined by the internal current source I_{OD} and by C_{OD} (Equation 2).

Equation 1

$$t_1 \cong R_{ON_OD} \cdot C_{OD} \cdot \ln\left(\frac{V_{OD}}{V_{SSDl}}\right) \quad (1)$$

Equation 2

$$t_2 \cong \frac{C_{OD} \cdot V_{SSDh}}{I_{OD}} \cdot \ln\left(\frac{V_{SSDl} - V_{OD}}{V_{SSDh} - V_{OD}}\right) \quad (2)$$

Where $V_{OD} = V_{FLOAT_OD}$

In case the OD pin is connected to VCC by an external pull-up resistor R_{OD_ext}, the OD discharge time is determined by the external network R_{OD_ext} C_{OD} and by the internal MOSFET's R_{ON_OD} (Equation 3), while the Restart time is determined by current in R_{OD_ext} (Equation 4).

Equation 3

$$t_1 \cong C_{OD} \cdot \left(R_{OD_ext} // R_{ON_OD}\right) \cdot \ln\left(\frac{V_{OD} - V_{on}}{V_{SSDl} - V_{on}}\right) \quad (3)$$

Equation 4

$$t_2 \cong C_{OD} \cdot R_{OD_ext} \cdot \ln\left(\frac{V_{SSDl} - V_{OD}}{V_{SSDh} - V_{OD}}\right) \quad (4)$$

where

$$V_{on} = \frac{R_{ON_OD}}{R_{OD_ext} + R_{ON_OD}} \cdot V_{cc} \;\; ; \;\; V_{OD} = V_{cc}$$

chanhvinh.com

Figure 9. **Smart shutdown timing waveforms**

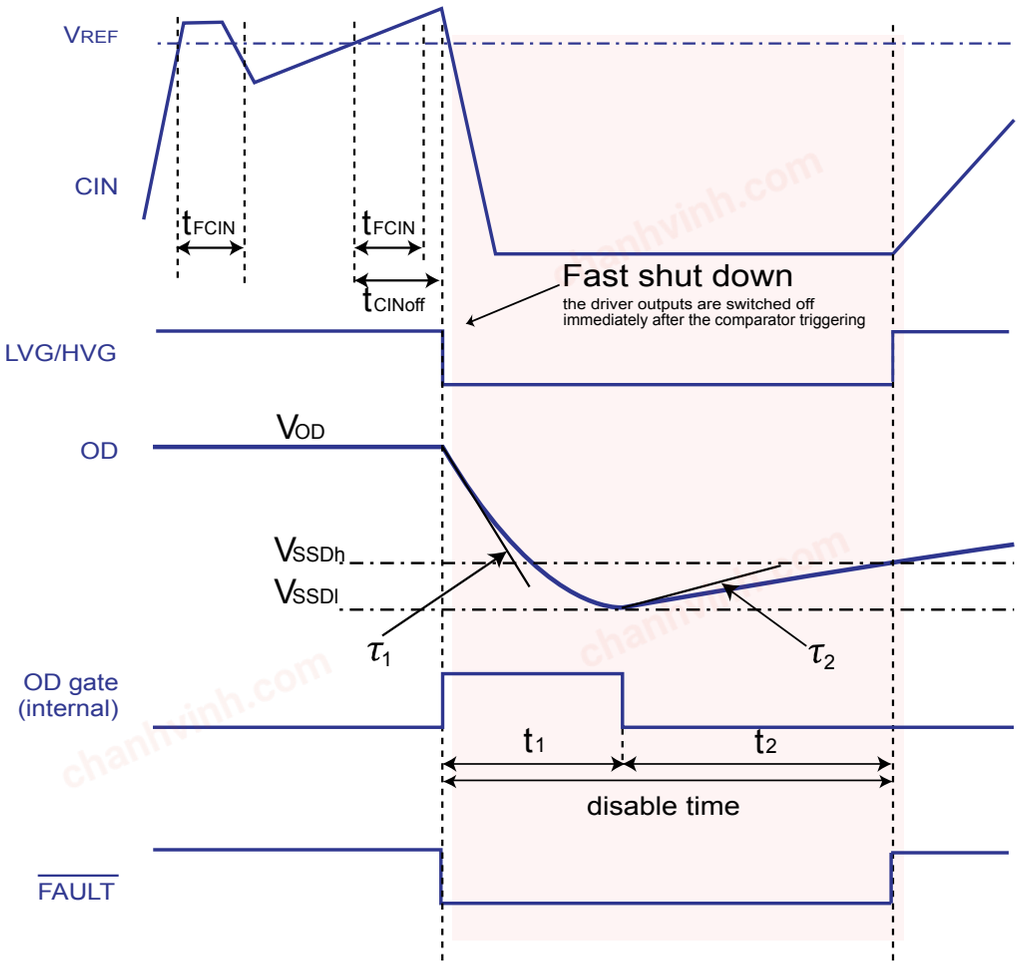

SMART SHUTDOWN CIRCUIT

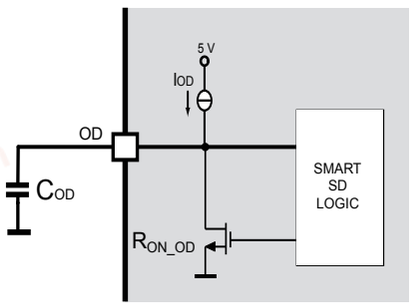

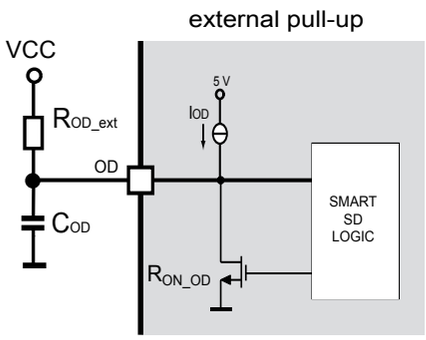

chanhvinh.com

6.2 Microcontroller unit

The integrated MCU is the STM32G031x8 with the following main characteristics:

- Core: ARM® Cortex® -M0+ 32-bit CPU, frequency up to 64 MHz
- Memories: 8 KB of SRAM, 64 KB of flash memory
- ADC 12-bit resolution and 0.4 µs sampling time
- 5-channel DMA controller with flexible mapping
- Full set of interfaces: UART, I^2C, SPI, LPUART

Note: For more details, refer to the STM32G031x8 datasheet on www.st.com.

6.2.1 Memories and boot mode

The device has the following features:

- 8 Kbytes of embedded SRAM
- The non-volatile memory is divided into two arrays:
  - 64 Kbytes of embedded flash memory for programs and data
  - Option bytes

The flash memory embeds the Error Correction Code (ECC) feature supporting:

- Single error detection and correction.
- Double error detection.
- The address of the ECC fail can be read from the ECC register.
- 1 Kbyte (128 double word) OTP (one-time programmable) bytes for user data. The OTP data cannot be erased and can be written only once.

Flexible protections can be configured thanks to the option bytes:

- Readout protection (RDP) to protect the whole memory with the following options:
  - Level 0: no readout protection.
  - Level 1: memory readout protection; the flash memory cannot be read from or written to if either the debug features are connected or the boot from RAM or bootloader are selected.
  - Level 2: chip readout protection; the debug features (serial wire), the boot from RAM and the bootloader selection are disabled. This selection is irreversible.
- Write protection (WRP): the protected area is protected against erasing and programming.
- Proprietary code readout protection (PCROP): a part of the flash memory can be protected against read and write from third parties.
- Securable memory area: a part of flash memory can be configured by option bytes to be securable.

At startup, the boot pin and boot selector option bit are used to select one of the three boot options:

- Boot from User flash memory.
- Boot from System Memory.
- Boot from embedded SRAM.

The boot pin is shared with a standard GPIO and can be enabled through the boot selector option bit.

The bootloader is located in System Memory. It is used to reprogram the flash memory by one of the following interfaces:

- USART on pins PA9/PA10 or PA2/PA3.
- I^2C-bus on pins PB6/PB7 or PB10/PB11.

6.2.2 Power management

The VDD is the external power supply for the internal regulator and the system analog such as reset, power management and internal clocks. It is provided externally through the VDD/VDDA pin.

The V_{DDA} is the analog power supply for ADC and the voltage reference buffer. The V_{DDA} voltage level is identical to the V_{DD} voltage as it is provided externally through the VDD/VDDA pin.

The V_{BAT} is the power supply (through a power switch) for RTC, TAMP, low-speed external 32.768 kHz oscillator, and backup registers when V_{DD} is not present. V_{BAT} is provided externally through the V_{BAT} pin.

chanhvinh.com

V_{REF+} is the analog peripheral input reference voltage, or the output of the internal voltage reference buffer (when enabled).

- When V_{DDA} < 2 V, V_{REF+} must be equal to V_{DDA}.
- When V_{DDA} ≥ 2 V, V_{REF+} must be between 2 V and V_{DDA}. It can be grounded when the analog peripherals using V_{REF+} are not active.

The device has an integrated power-on/power-down (POR/PDR) reset active in all power modes except shutdown and ensures proper operation upon power-on and power-down. It maintains the device in reset when the supply voltage is below the $V_{POR/PDR}$ threshold, without the need for an external reset circuit.

Brownout reset (BOR) function allows extra flexibility. It can be enabled and configured through option bytes, by selecting one of four thresholds for rising V_{DD} and the other four for falling V_{DD}.

The device also features an embedded programmable voltage detector (PVD) that monitors the V_{DD} power supply and compares it to the V_{PVD} threshold. It allows generating an interrupt when the V_{DD} level crosses the V_{PVD} threshold, selectively while falling, while rising, or while falling and rising. The interrupt service routine can then generate a warning message and/or put the MCU into a safe state. The PVD is enabled by software.

The MCU supports three low-power modes to achieve the best compromise between low power consumption, short startup time and available wake-up sources:

- **Sleep mode**

  In sleep mode, only the CPU is stopped. All peripherals continue to operate and can wake up the CPU when an interrupt/event occurs.

- **Low-power run mode**

  The low-power run mode is achieved with V_{CORE} supplied by the low-power regulator to minimize the regulator's operating current.

- **Stop mode**

  In stop mode the device achieves low power consumption while retaining the content of SRAM and registers.

- **Standby mode**

  The standby mode is used to achieve a very low power consumption with POR/PDR always active in this mode.

  The device exits standby mode when an external reset (NRST pin), IWDG reset event, wake-up event (WKUP pin, configurable rising or falling edge) or RTC event (alarm, periodic wake-up, timestamp, tamper), or when a failure is detected on LSE (CSS on LSE).

- **Shutdown mode**

  The shutdown mode is used to achieve the lowest power consumption. The BOR is not available in shutdown mode. No power voltage monitoring is possible in this mode. Therefore, switching to an RTC domain is not supported.

  The device exits shutdown mode upon external reset event (NRST pin), IWDG reset event, wake-up event (WKUP pin, configurable rising or falling edge) or RTC event (alarm, periodic wake-up, timestamp, tamper).

chanhvinh.com

6.2.3 Advanced-control timer (TIM1)

The advanced-control timer (TIM1) can be seen as a three-phase PWM multiplexed on six channels. It has complementary PWM outputs with programmable inserted deadtimes.

This timer is used to generate the PWM signal for the three half-bridge gate drivers as shown in Table 9.

Table 9. TIM1 channel configuration

MCU I/O	Analog IC input/output	TIM1 channel
PB13	LIN1	TIM1_CH1N
PB14	LIN2	TIM1_CH2N
PB15	LIN3	TIM1_CH3N
PA8	HIN1	TIM1_CH1
PA9	HIN2	TIM1_CH2
PA10	HIN3	TIM1_CH3
PB12 (1)	FAULT	TIM1_BKIN

1. *The PB12 must be configured with internal pull-up since FAULT output is open-drain.*

chanhvinh.com

7 Package information

In order to meet environmental requirements, ST offers these devices in different grades of ECOPACK packages, depending on their level of environmental compliance. ECOPACK specifications, grade definitions and product status are available at: www.st.com. ECOPACK is an ST trademark.

7.1 QFN 10x10 72L package information

Figure 10. Package mechanical data

TOP VIEW

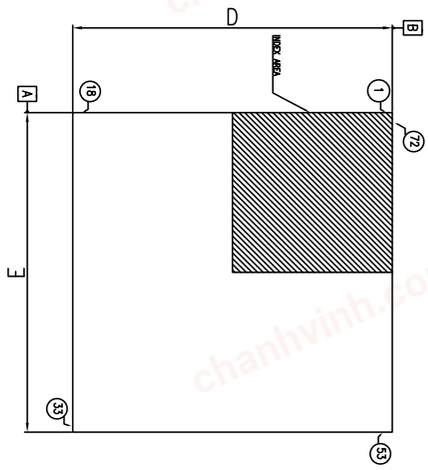

BOTTOM VIEW

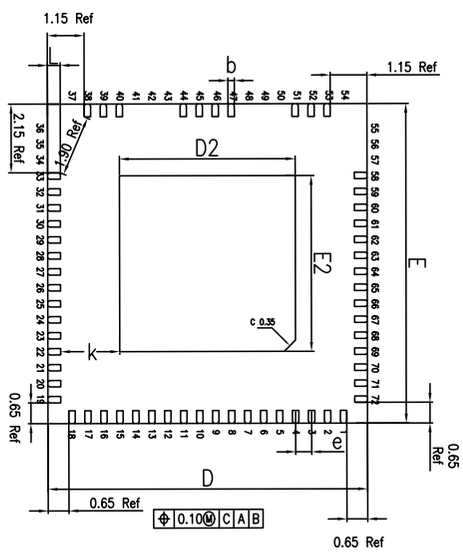

SIDE VIEW

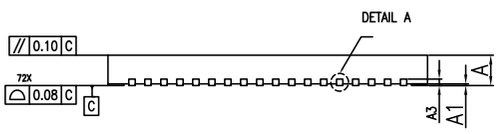

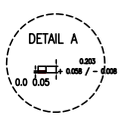

chanhvinh.com

Table 10. **QFN package dimensions**

Symbol	Min.	Nom.	Max.
A	0.90	0.95	1.00
A1	0		0.05
A3		0.20 Ref.	
b	0.15	0.20	0.25
D	9.90	10.00	10.10
D2	5.40	5.50	5.60
e		0.50 BSC	
E	9.90	10.00	10.10
E2	5.40	5.50	5.60
L	0.30	0.40	0.50
K		1.85 Ref.	
Tolerance			
aaa		0.15	
bbb		0.10	
ccc		0.10	
ddd		0.05	
eee		0.08	

Note: All dimensions are mm unless otherwise specified.

7.2 Suggested land pattern

Note: All dimensions are mm unless otherwise specified.

Figure 11. **QFN 10x10 72L suggested land pattern**

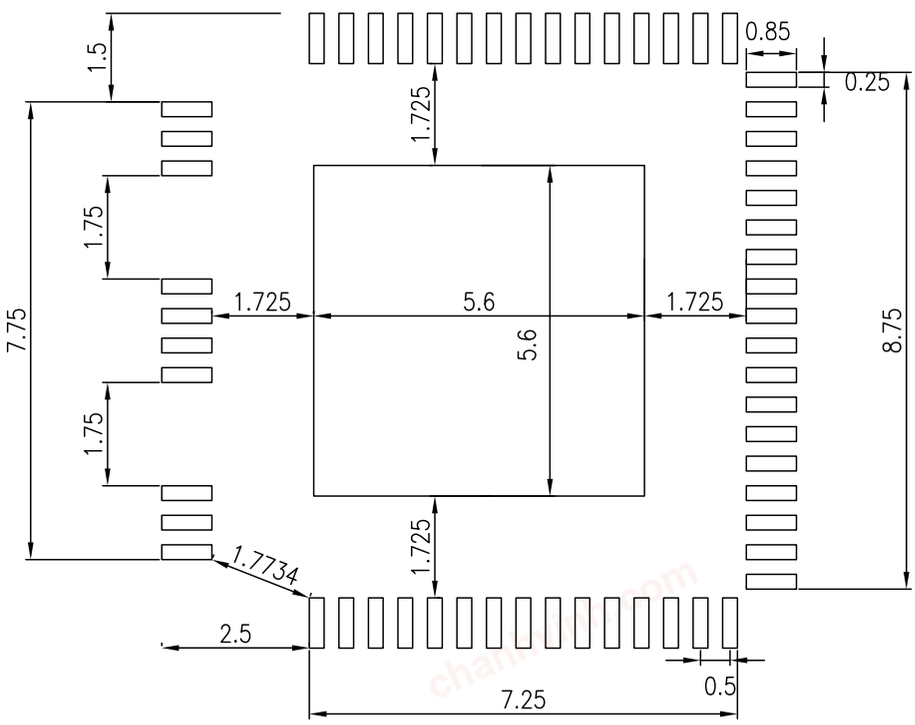

chanhvinh.com

8 Ordering information

Table 11. **Order codes**

Order code	Package	Package marking	Packaging
STSPIN32G0251Q	QFN 10 x 10 72L	SPING251Q	Tray
STSPIN32G0251QTR	QFN 10 x 10 72L	SPING251Q	Tape and Reel

chanhvinh.com

Revision history

Table 12. **Document revision history**

Date	Version	Changes
13-Dec-2023	1	Initial release.

chanhvinh.com

Contents

1 Description 2
2 Block diagram 3
3 Pin description and connection diagram 4
4 Electrical data 8
4.1 Absolute maximum ratings 8
4.2 Recommended operating conditions 9
4.3 Thermal data 9
5 Electrical characteristics 10
6 Device description 15
6.1 Gate driver 15
6.1.1 Inputs and outputs 15
6.1.2 Deadtime 15
6.1.3 VCC UVLO protection 15
6.1.4 V_{BO} UVLO protection 17
6.1.5 Comparator and Smart shutdown 17
6.2 Microcontroller unit 20
6.2.1 Memories and boot mode 20
6.2.2 Power management 20
6.2.3 Advanced-control timer (TIM1) 22
7 Package information 23
7.1 QFN 10x10 72L package information 23
7.2 Suggested land pattern 24
8 Ordering information 25
Revision history 26
List of tables 28
List of figures 29

chanhvinh.com

List of tables

Table 1. Legend/abbreviations used in the pin description table . . . 4
Table 2. Pin description . . . 5
Table 3. STSPIN32G0251 MCU-Driver internal connections . . . 7
Table 4. Absolute maximum ratings . . . 8
Table 5. Recommended operating conditions . . . 9
Table 6. Thermal data . . . 9
Table 7. Electrical characteristics . . . 10
Table 8. Inputs truth table (applicable when the device is not in UVLO or SmartSD protection) . . . 15
Table 9. TIM1 channel configuration . . . 22
Table 10. QFN package dimensions . . . 24
Table 11. Order codes . . . 25
Table 12. Document revision history . . . 26

chanhvinh.com

List of figures

Figure 1. STSPIN32G0251 SiP block diagram . . . 3
Figure 2. STSPIN32G0251 pin connection (top view) . . . 4
Figure 3. Propagation delay timing definition . . . 13
Figure 4. Deadtime timing definitions . . . 13
Figure 5. Deadtime and interlocking waveforms definition . . . 14
Figure 6. VCC power ON and UVLO, LVG timing . . . 16
Figure 7. VCC power ON and UVLO, HVG timing . . . 16
Figure 8. V_{BO} power-ON and UVLO timing . . . 17
Figure 9. Smart shutdown timing waveforms . . . 19
Figure 10. Package mechanical data . . . 23
Figure 11. QFN 10x10 72L suggested land pattern . . . 24

chanhvinh.com

chanhvinh.com

IMPORTANT NOTICE – READ CAREFULLY

STMicroelectronics NV and its subsidiaries (“ST”) reserve the right to make changes, corrections, enhancements, modifications, and improvements to ST products and/or to this document at any time without notice. Purchasers should obtain the latest relevant information on ST products before placing orders. ST products are sold pursuant to ST’s terms and conditions of sale in place at the time of order acknowledgment.

Purchasers are solely responsible for the choice, selection, and use of ST products and ST assumes no liability for application assistance or the design of purchasers’ products.

No license, express or implied, to any intellectual property right is granted by ST herein.

Resale of ST products with provisions different from the information set forth herein shall void any warranty granted by ST for such product.

ST and the ST logo are trademarks of ST. For additional information about ST trademarks, refer to www.st.com/trademarks. All other product or service names are the property of their respective owners.

Information in this document supersedes and replaces information previously supplied in any prior versions of this document.

© 2023 STMicroelectronics – All rights reserved