chanhvinh.com

STI260N6F6
STP260N6F6

N-channel 60 V, 0.0024 Ω, 120 A STripFET™ VI DeepGATE™ Power MOSFET in TO-220 and I²PAK packages

Features

Order codes	V_{DSS}	$R_{DS(on)}$ max	I_D
STI260N6F6 STP260N6F6	60 V	< 0.003 Ω	120 A

- Low gate charge
- Very low on-resistance
- High avalanche ruggedness

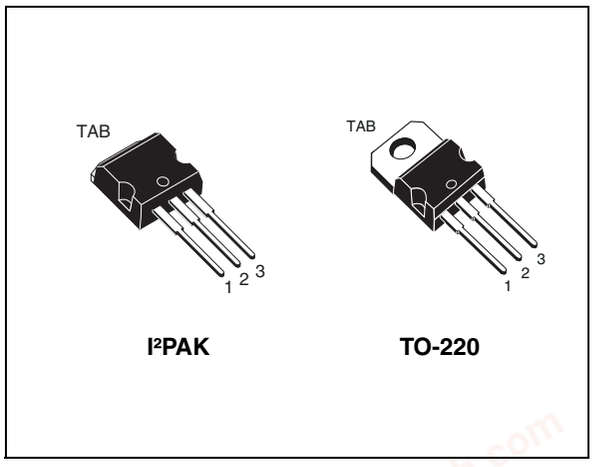

I²PAK TO-220

Application

- Switching applications

Description

These devices are N-channel Power MOSFETs developed using the 6th generation of STripFET™ DeepGATE™ technology, with a new gate structure. The resulting Power MOSFETs exhibits the lowest $R_{DS(on)}$ in all packages.

Figure 1. Internal schematic diagram

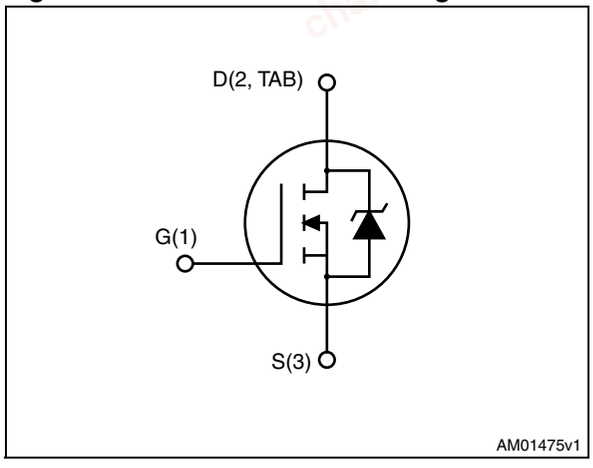

Table 1. Device summary

Order codes	Marking	Package	Packaging
STI260N6F6	260N6F6	I²PAK	Tube
STP260N6F6		TO-220	

chanhvinh.com

Contents

1 Electrical ratings 3

2 Electrical characteristics 4

2.1 Electrical characteristics (curves) 6

3 Test circuits 8

4 Package mechanical data 9

5 Revision history 13

chanhvinh.com

1 Electrical ratings

Table 2. Absolute maximum ratings

Symbol	Parameter	Value	Unit
V_{DS}	Drain-source voltage	60	V
V_{GS}	Gate-source voltage	± 20	V
I_D	Drain current (continuous) at T_C = 25 °C	120	A
I_D	Drain current (continuous) at T_C = 100 °C	120	A
I_{DM} (1)	Drain current (pulsed)	480	A
P_{TOT}	Total dissipation at T_C = 25 °C	300	W
	Derating factor	2	W/°C
T_{stg}	Storage temperature	- 55 to 175	°C
T_j	Operating junction temperature		

1. Current limited by package.

Table 3. Thermal data

Symbol	Parameter	Value	Unit
$R_{thj\text{-}case}$	Thermal resistance junction-case max	0.5	°C/W
$R_{thj\text{-}a}$	Thermal resistance junction-ambient max	62.5	°C/W
T_l	Maximum lead temperature for soldering purpose	300	°C

chanhvinh.com

2 Electrical characteristics

(T_{CASE} = 25 °C unless otherwise specified)

Table 4. On/off states

Symbol	Parameter	Test conditions	Min.	Typ.	Max.	Unit
$V_{(BR)DSS}$	Drain-source breakdown voltage (V_{GS} = 0)	I_D = 250 µA	60			V
I_{DSS}	Zero gate voltage Drain current (V_{GS} = 0)	V_{DS} = 60 V V_{DS} = 60 V, T_C=125 °C			1 100	µA µA
I_{GSS}	Gate-body leakage current (V_{DS} = 0)	V_{GS} = ± 20 V			± 100	nA
$V_{GS(th)}$	Gate threshold voltage	V_{DS} = V_{GS}, I_D = 250 µA	2		4	V
$R_{DS(on)}$	Static drain-source on-resistance	V_{GS} = 10 V, I_D = 60 A		2.4	3	mΩ

Table 5. Dynamic

Symbol	Parameter	Test conditions	Min.	Typ.	Max.	Unit
C_{iss}	Input capacitance	V_{DS} = 25 V, f = 1 MHz, V_{GS} = 0	-	11400	-	pF
C_{oss}	Output capacitance			850		pF
C_{rss}	Reverse transfer capacitance			368		pF
Q_g	Total gate charge	V_{DD} = 30 V, I_D = 120 A, V_{GS} = 10 V *(see Figure 14)*	-	183	-	nC
Q_{gs}	Gate-source charge			53		nC
Q_{gd}	Gate-drain charge			41		nC

Table 6. Switching times

Symbol	Parameter	Test conditions	Min.	Typ.	Max.	Unit
$t_{d(on)}$	Turn-on delay time	V_{DD} = 30 V, I_D = 60 A R_G = 4.7 Ω V_{GS} = 10 V *(see Figure 13)*	-	31.4	-	ns
t_r	Rise time			165		ns
$t_{d(off)}$	Turn-off-delay time		-	144.4	-	ns
t_f	Fall time			62.6		ns

chanhvinh.com

Table 7. Source drain diode

Symbol	Parameter	Test conditions	Min.	Typ.	Max	Unit
I_{SD}	Source-drain current		-		120	A
I_{SDM} (1)	Source-drain current (pulsed)		-		480	A
V_{SD} (2)	Forward on voltage	I_{SD} = 120 A, V_{GS} = 0	-		1.1	V
t_{rr} Q_{rr} I_{RRM}	Reverse recovery time Reverse recovery charge Reverse recovery current	I_{SD} = 120 A, V_{DD} = 48 V di/dt = 100 A/µs, T_j = 150 °C *(see Figure 15)*	-	55.6 116 3.8		ns nC A

1. Current limited by package.
2. Pulsed: pulse duration = 300 µs, duty cycle 1.5%

chanhvinh.com

2.1 Electrical characteristics (curves)

Figure 2. Safe operating area

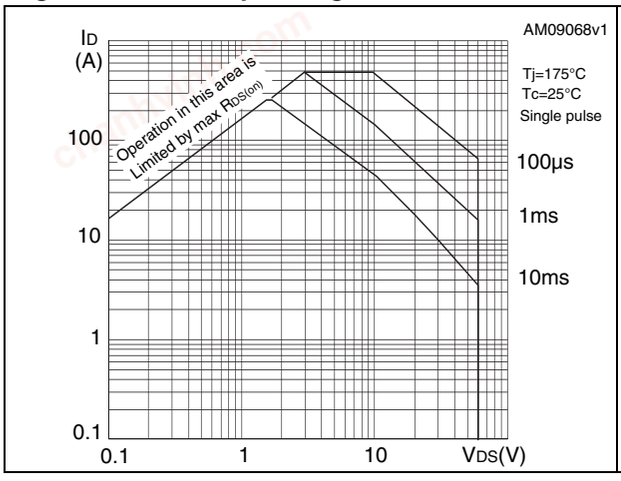

Figure 3. Thermal impedance

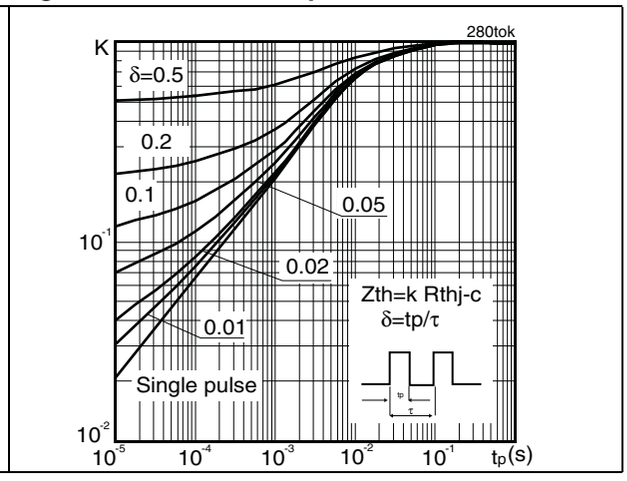

Figure 4. Output characteristics

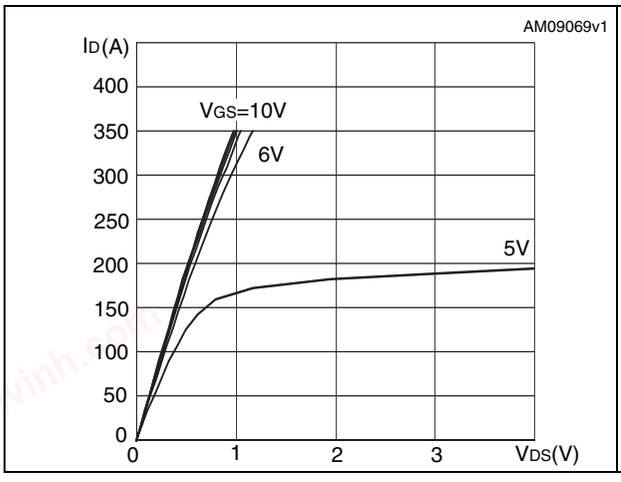

Figure 5. Transfer characteristics

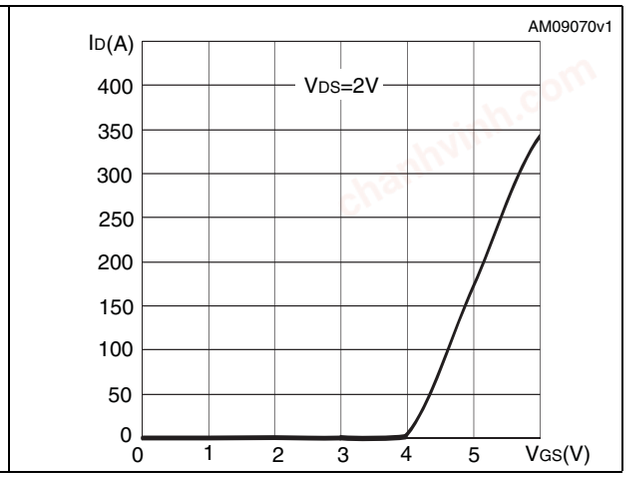

Figure 6. Normalized B_{VDSS} vs. temperature

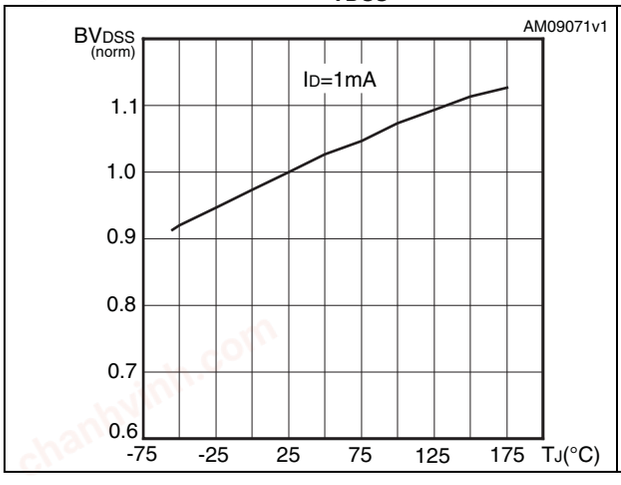

Figure 7. Static drain-source on resistance

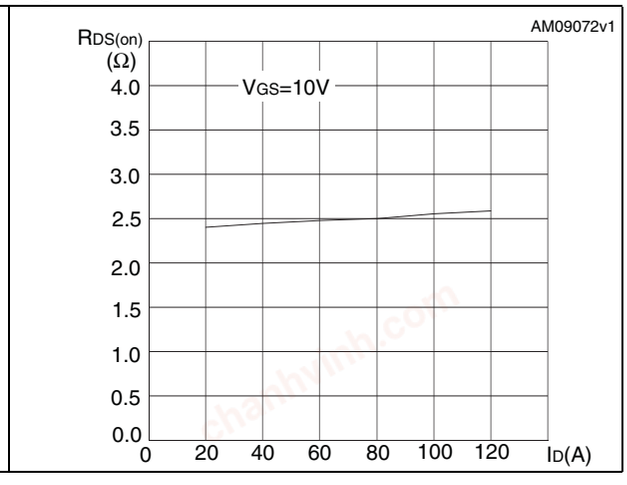

chanhvinh.com

Figure 8. Gate charge vs. gate-source voltage

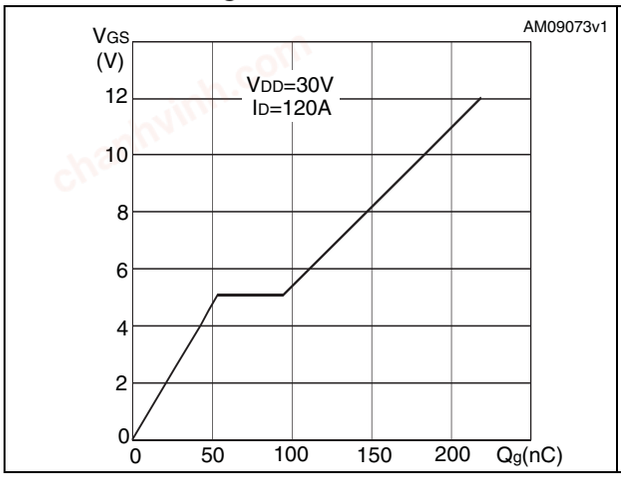

Figure 9. Capacitance variations

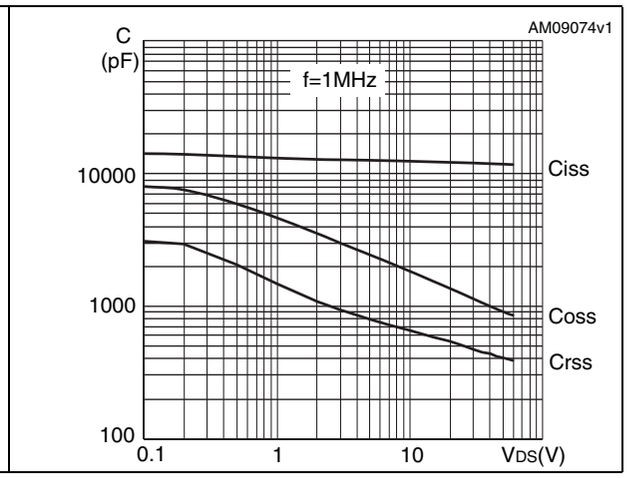

Figure 10. Normalized gate threshold voltage vs. temperature

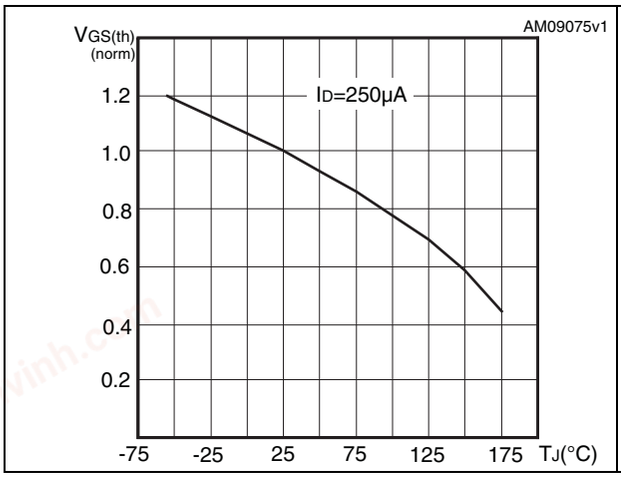

Figure 11. Normalized on resistance vs. temperature

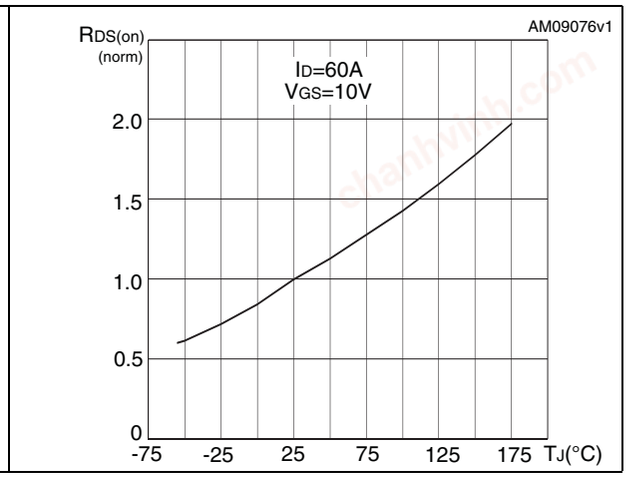

Figure 12. Source-drain diode forward characteristics

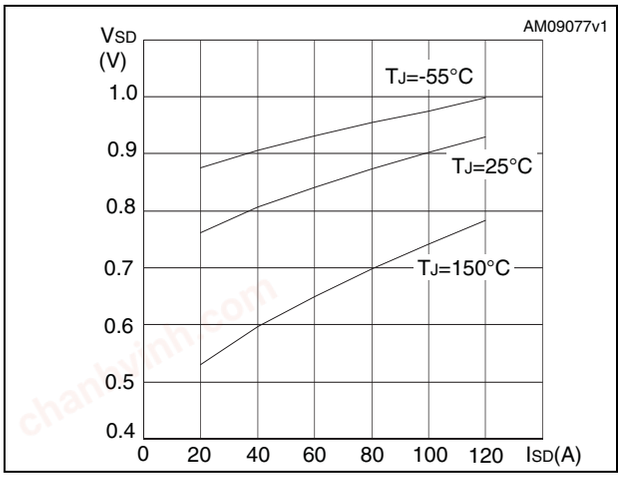

chanhvinh.com

3 Test circuits

Figure 13. Switching times test circuit for resistive load

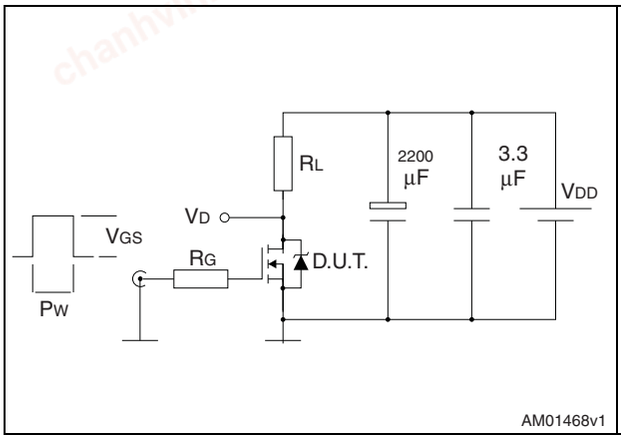

Figure 14. Gate charge test circuit

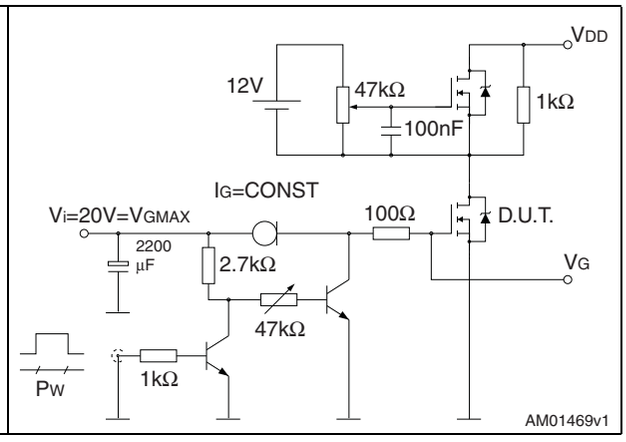

Figure 15. Test circuit for inductive load switching and diode recovery times

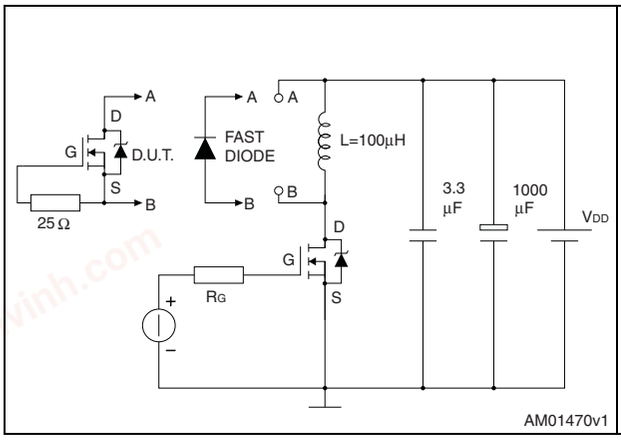

Figure 16. Unclamped inductive load test circuit

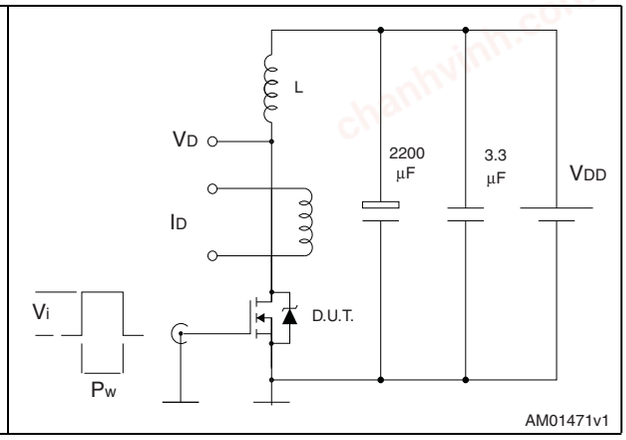

Figure 17. Unclamped inductive waveform

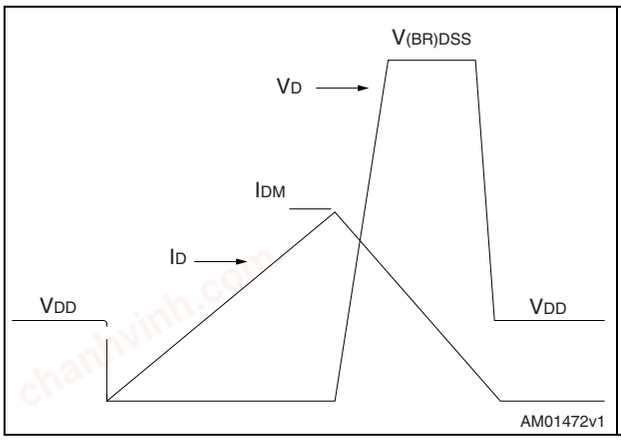

Figure 18. Switching time waveform

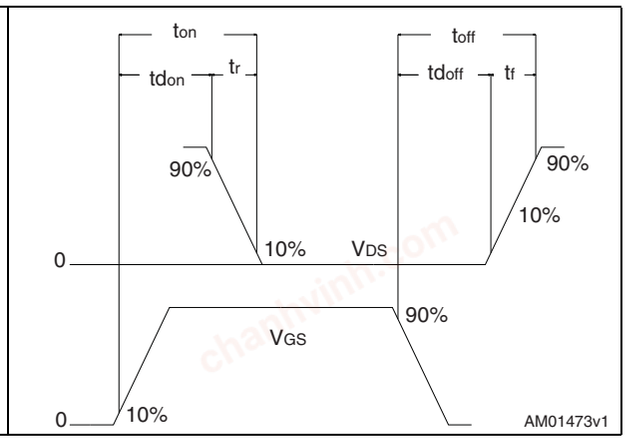

chanhvinh.com

4 Package mechanical data

In order to meet environmental requirements, ST offers these devices in different grades of ECOPACK® packages, depending on their level of environmental compliance. ECOPACK® specifications, grade definitions and product status are available at: www.st.com. ECOPACK is an ST trademark.

chanhvinh.com

Table 8. I²PAK (TO-262) mechanical data

DIM.	mm.		
	min.	typ	max.
A	4.40		4.60
A1	2.40		2.72
b	0.61		0.88
b1	1.14		1.70
c	0.49		0.70
c2	1.23		1.32
D	8.95		9.35
e	2.40		2.70
e1	4.95		5.15
E	10		10.40
L	13		14
L1	3.50		3.93
L2	1.27		1.40

Figure 19. I²PAK (TO-262) drawing

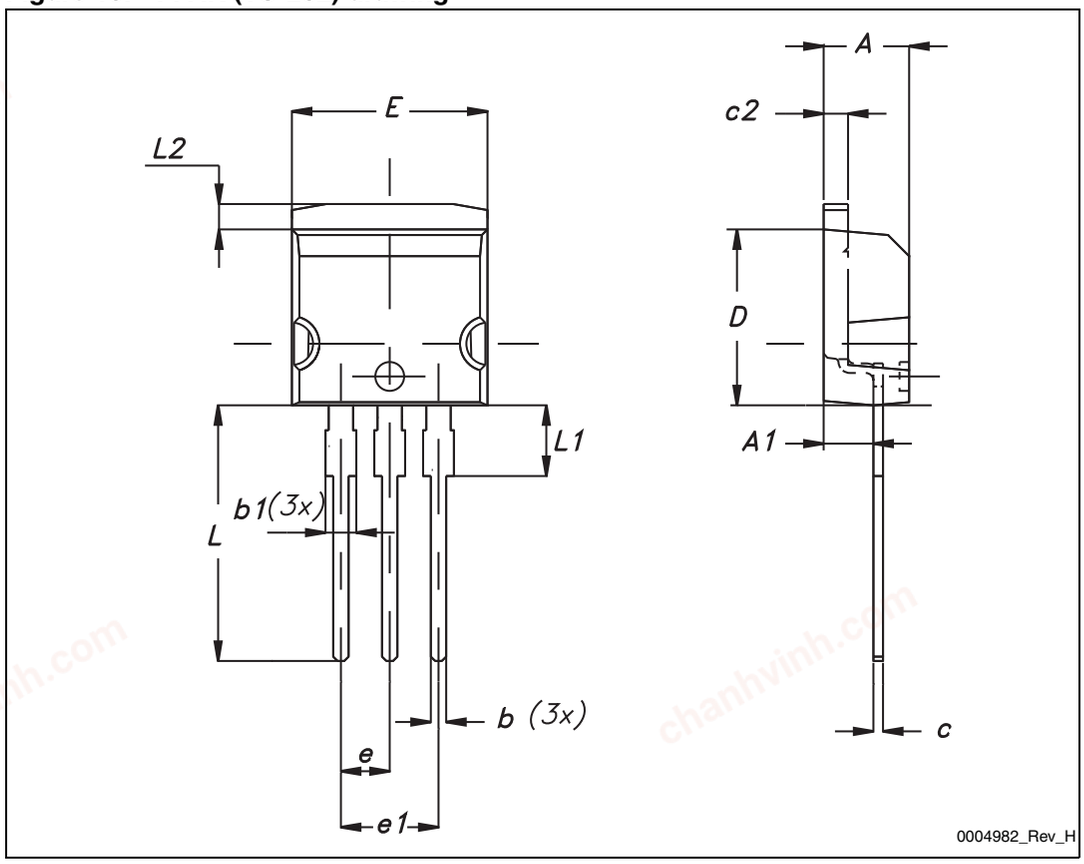

chanhvinh.com

Table 9. TO-220 type A mechanical data

Dim.	mm		
	Min.	Typ.	Max.
A	4.40		4.60
b	0.61		0.88
b1	1.14		1.70
c	0.48		0.70
D	15.25		15.75
D1		1.27	
E	10		10.40
e	2.40		2.70
e1	4.95		5.15
F	1.23		1.32
H1	6.20		6.60
J1	2.40		2.72
L	13		14
L1	3.50		3.93
L20		16.40	
L30		28.90	
∅P	3.75		3.85
Q	2.65		2.95

chanhvinh.com

Figure 20. TO-220 type A drawing

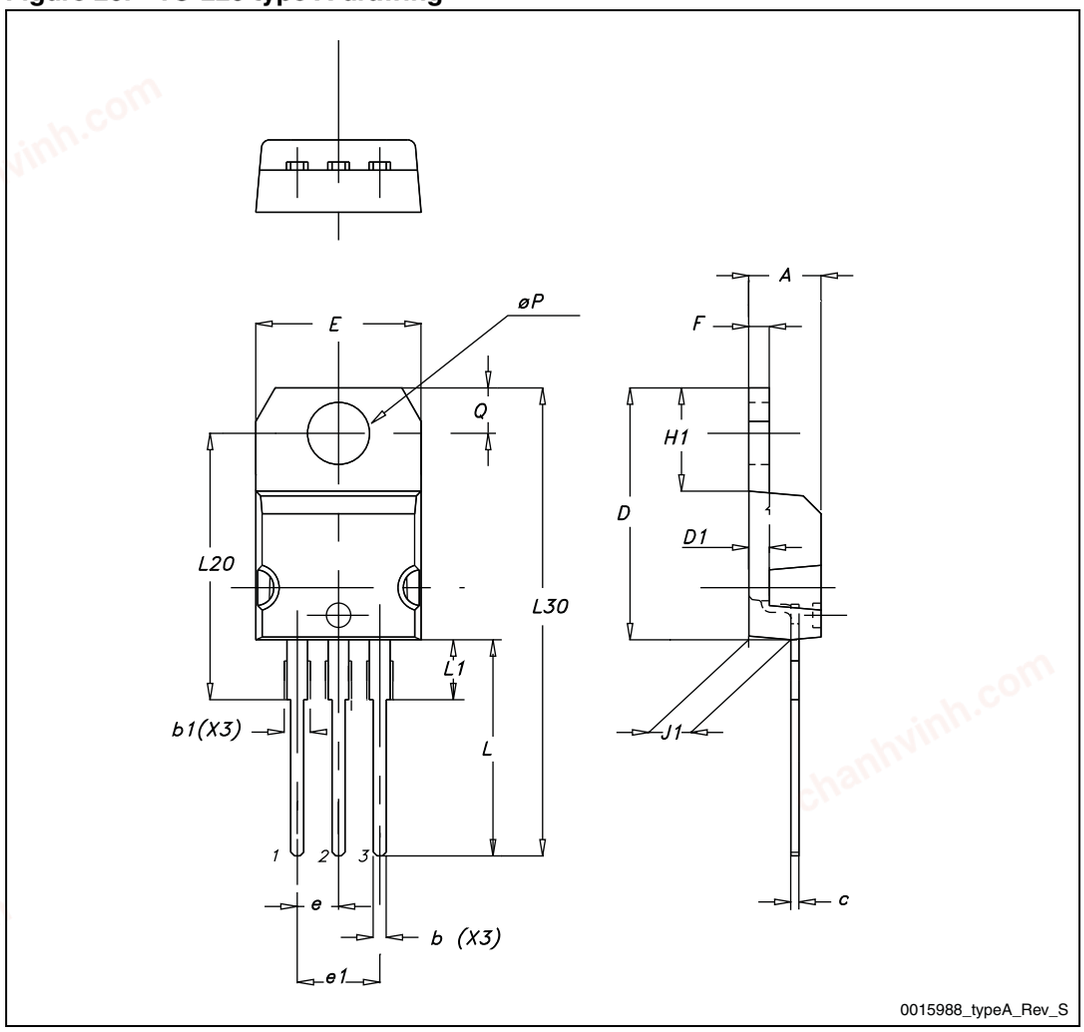

chanhvinh.com

5 Revision history

Table 10. Document revision history

Date	Revision	Changes
07-May-2010	1	First release.
18-Apr-2011	2	Document status promoted from preliminary data to datasheet.
27-Apr-2011	3	*Device summary* has been updated.
05-Oct-2011	4	*Table 2: Absolute maximum ratings* has been updated. Minor text changes.
13-Jan-2012	5	Updated *Table 2: Absolute maximum ratings*.

chanhvinh.com

Please Read Carefully:

Information in this document is provided solely in connection with ST products. STMicroelectronics NV and its subsidiaries (“ST”) reserve the right to make changes, corrections, modifications or improvements, to this document, and the products and services described herein at any time, without notice.

All ST products are sold pursuant to ST’s terms and conditions of sale.

Purchasers are solely responsible for the choice, selection and use of the ST products and services described herein, and ST assumes no liability whatsoever relating to the choice, selection or use of the ST products and services described herein.

No license, express or implied, by estoppel or otherwise, to any intellectual property rights is granted under this document. If any part of this document refers to any third party products or services it shall not be deemed a license grant by ST for the use of such third party products or services, or any intellectual property contained therein or considered as a warranty covering the use in any manner whatsoever of such third party products or services or any intellectual property contained therein.

UNLESS OTHERWISE SET FORTH IN ST’S TERMS AND CONDITIONS OF SALE ST DISCLAIMS ANY EXPRESS OR IMPLIED WARRANTY WITH RESPECT TO THE USE AND/OR SALE OF ST PRODUCTS INCLUDING WITHOUT LIMITATION IMPLIED WARRANTIES OF MERCHANTABILITY, FITNESS FOR A PARTICULAR PURPOSE (AND THEIR EQUIVALENTS UNDER THE LAWS OF ANY JURISDICTION), OR INFRINGEMENT OF ANY PATENT, COPYRIGHT OR OTHER INTELLECTUAL PROPERTY RIGHT.

UNLESS EXPRESSLY APPROVED IN WRITING BY TWO AUTHORIZED ST REPRESENTATIVES, ST PRODUCTS ARE NOT RECOMMENDED, AUTHORIZED OR WARRANTED FOR USE IN MILITARY, AIR CRAFT, SPACE, LIFE SAVING, OR LIFE SUSTAINING APPLICATIONS, NOR IN PRODUCTS OR SYSTEMS WHERE FAILURE OR MALFUNCTION MAY RESULT IN PERSONAL INJURY, DEATH, OR SEVERE PROPERTY OR ENVIRONMENTAL DAMAGE. ST PRODUCTS WHICH ARE NOT SPECIFIED AS "AUTOMOTIVE GRADE" MAY ONLY BE USED IN AUTOMOTIVE APPLICATIONS AT USER’S OWN RISK.

Resale of ST products with provisions different from the statements and/or technical features set forth in this document shall immediately void any warranty granted by ST for the ST product or service described herein and shall not create or extend in any manner whatsoever, any liability of ST.

ST and the ST logo are trademarks or registered trademarks of ST in various countries.

Information in this document supersedes and replaces all information previously supplied.

The ST logo is a registered trademark of STMicroelectronics. All other names are the property of their respective owners.

© 2012 STMicroelectronics - All rights reserved

STMicroelectronics group of companies

Australia - Belgium - Brazil - Canada - China - Czech Republic - Finland - France - Germany - Hong Kong - India - Israel - Italy - Japan - Malaysia - Malta - Morocco - Philippines - Singapore - Spain - Sweden - Switzerland - United Kingdom - United States of America

www.st.com