chanhvinh.com

STM6700, STM6710

Low-voltage, high-accuracy, triple/quad voltage microprocessor supervisory circuit in SOT package

Datasheet - production data

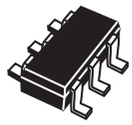

SOT23-6 (WB)

Features

- Accurate monitoring of up to four supply voltages
- Precision factory set reset threshold options for 1.8 V, 2.5 V, 3.0 V, 3.3 V and 5.0 V
- Adjustable input threshold voltage = 0.62 V with 1.5% accuracy
- Low power consumption (< 35 µA)
- Reset timeout period 200 ms (typ.) - STM6710
- 5 µs propagation delay - STM6700
- Open drain $\overline{\text{RESET}}$ output with a weak pull-up (10 µA)
- $\overline{\text{RESET}}$ - active low - valid to V1IN = 1 V or V2IN = 1 V
- Immune to power supply transients
- Small 6-pin SOT23 package
- RoHS compliant

Applications

- Telecommunications
- Set-top boxes
- Networking equipment
- Server/workstations
- Desktop and notebook computers
- Data storage equipment

Table 1. Device summary

Order code	V1IN (V)	V2IN (V)	V3IN (V)	V4IN (V)	Power supply tolerance	Temperature range	Package
STM6710DWB6F	5	3.3	1.8	Adj.	5%	-40 to 85 °C	SOT23-6
STM6710FWB6F	Adj.		2.5	1.8			
STM6710FWB7F						-40 to 105 °C	
STM6710KWB6F			1.8	Adj.	10%	-40 to 85 °C	
STM6710LWB6F					5%		
STM6710LWB7F						-40 to 105 °C	

This is information on a product in full production. www.st.com

chanhvinh.com

Contents

1 Description . . . 3

2 Functional description . . . 4

3 Pinout and pin description . . . 6

4 Device operation . . . 7

4.1 $\overline{\text{RESET}}$ output configuration . . . 7

4.2 Adjustable thresholds (input configurations) . . . 9

4.3 Unused inputs . . . 10

4.4 Adding manual reset capability . . . 10

5 Maximum ratings . . . 11

6 DC and AC parameters . . . 12

7 Package mechanical data . . . 14

7.1 SOT23 - 6-lead small outline transistor package information . . . 14

8 Part numbering . . . 17

9 STM6700 / STM6710 device selector guide . . . 18

10 Revision history . . . 19

chanhvinh.com

1 Description

The STM6710 is a precision voltage monitoring supervisor with the capability to monitor triple/quad voltages and combine competitive reset threshold accuracy with low power consumption.

Factory-trimmed reset threshold options for monitoring 5.0 V, 3.3 V, 2.5 V and 1.8 V supplies with –5% and –10% tolerances are available.

If a monitored supply voltage input falls below the minimum voltage threshold, a single active low output is asserted, triggering a system reset.

This device can be configured to support an external manual reset input using minimal external components.

Monitoring up to four different voltages in a small 6-lead SOT23 package, the STM6710 devices can help to lower system cost, reduce board space requirements, and increase the reliability of multi-voltage systems.

Low V_{CC} detection circuitry protects the user's system from low voltage conditions, resetting the system when V_{CC} or any of the other monitored power supply voltages fall below their respective minimum voltage thresholds. The reset signal remains asserted until all of these voltages return to proper operating levels and stabilize.

STM6710 includes internally fixed monitoring voltages for 5.0 V, 3.3 V, 3.0 V, 2.5 V and 1.8 V supplies with –5% and –10% tolerances.

This device functions as a triple monitoring voltage supervisor (STM6700) when V2IN is used as V_{CC}.

The output is open drain with a weak internal pull-up to the monitored V2IN supply (or V_{CC} in the case of STM6710Q) of typically 10 µA. Once all voltages rise above the selected threshold level, the STM6710 reset signal remains low for the reset timeout period of 200 ms (typical). The STM6700 acts as a voltage detector with a propagation delay of 5 µs after all monitored voltages exceed their thresholds.

The STM6710 output remains valid as long as V1IN or V2IN exceeds 1 V. For the STM6700 and STM6710 the condition is to have V_{CC} above 2 V.

chanhvinh.com

2 Functional description

Figure 1. Functional block diagram

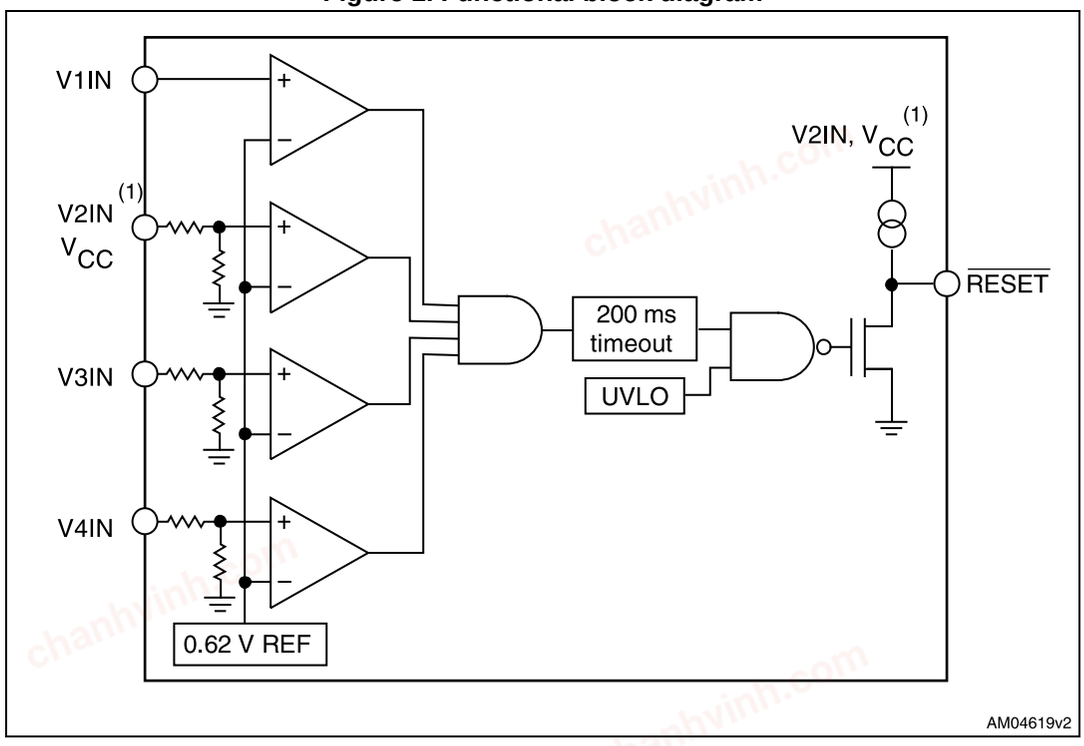

1. The STM6700 and STM6710Q are powered via the V2IN input which is the supply voltage. When this pin is V_{CC}, the input is not monitored.

Figure 2. Logic diagram

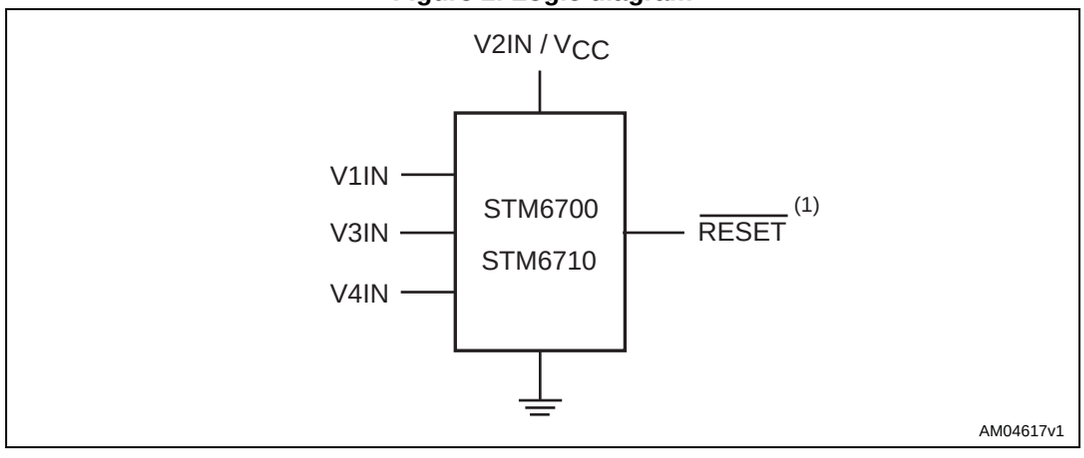

1. Open drain

chanhvinh.com

Table 2. Signal names

Pin	Name	Type	Function (STM6710 / STM6700)
1	V1IN	Input	Input voltage 1
2	V2IN	Input/supply	Input voltage 2 and device power supply pin
	V_{CC}		For the triple monitor voltage STM6700 and for STM6710Q, this pin is the V_{CC} supply pin and it is not monitored
3	V3IN	Input	Input voltage 3
4	V4IN		Input voltage 4
5	GND	Supply	Ground
6	$\overline{\text{RESET}}$	Output	Active low, open drain $\overline{\text{RESET}}$ output. Output goes low when any input drops below the specified threshold. Once all inputs rise above their threshold voltages, $\overline{\text{RESET}}$ remains low for typical 200 ms (STM6710) before going high. For the triple monitor (STM6700) it remains low for 5 µs (propagation delay - no t_{REC}). The open drain $\overline{\text{RESET}}$ has a weak (10 µA) internal pull-up to V2IN (STM6710) or V_{CC} (STM6700/STM6710Q).

chanhvinh.com

3 Pinout and pin description

Figure 3. Pinout SOT23-6

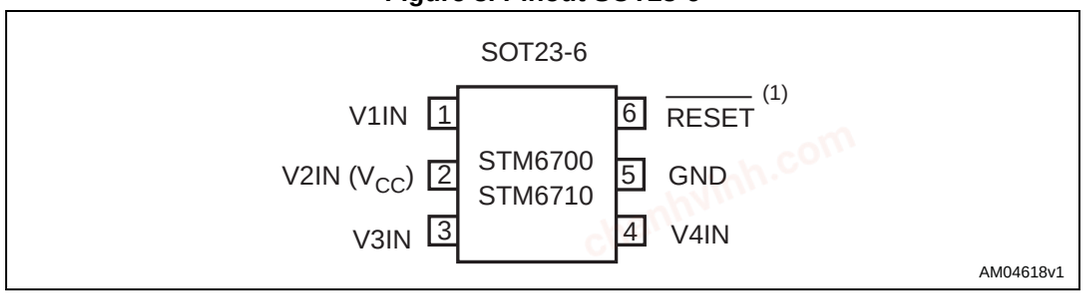

1. Open drain
2. For the STM6700 and STM6710Q, pin 2 is a fixed V_{CC}, thereby making it a triple voltage reset, while the STM6710 is a quad voltage reset.

V1IN, V3IN,V4IN (VxIN)

The VxIN pins are used for nominal input voltages for 1.8 V, 2.5 V and 5.0 V supplies. The voltage at this pin is compared against an internal factory-programmed voltage trip point, Vrst.

$\overline{\text{RESET}}$ is first asserted low when the device is initially powered and VxIN < 1 V and then at any time thereafter when VxIN falls below Vrst. The device is designed with typical hysteresis of 0.3% with respect to its threshold to help prevent oscillation due to noise and is immune to brief power supply transients.

V2IN

The V2IN is used to power the STM6710 device. In normal operations V2IN is also monitored. For STM6710Q and STM6700 variations this pin is the V_{CC} power supply but is not monitored.

Ground (V_{SS})

This pin (GND) is the ground pin for the power supply and is tied to V_{SS}.

$\overline{\text{RESET}}$

The $\overline{\text{RESET}}$ output is an open drain output that asserts low whenever a monitored supply falls below the minimum threshold. STM6710 provides an extended reset timeout period of typically 200 ms.

chanhvinh.com

4 Device operation

The STM6710 is capable of monitoring up to 4 voltages in a multisupply application. The device is available in several preset voltage thresholds for power supplies of 1.8 V, 2.5 V, 3.0 V, 3.3 V and 5.0 V. The STM6710 is powered by the V2IN pin which is also a monitored voltage, thus making this a quad voltage monitor. The STM6710Q and STM6700 use this pin as V_{CC} which is not monitored and thereby limits these devices to three adjustable voltage inputs. If any of the monitored input voltage falls below its associated threshold, the active low reset output is asserted and remains low as long as V1IN or V2IN remains above 1.0 V.

Figure 4. Hardware hookup (typical application diagram)

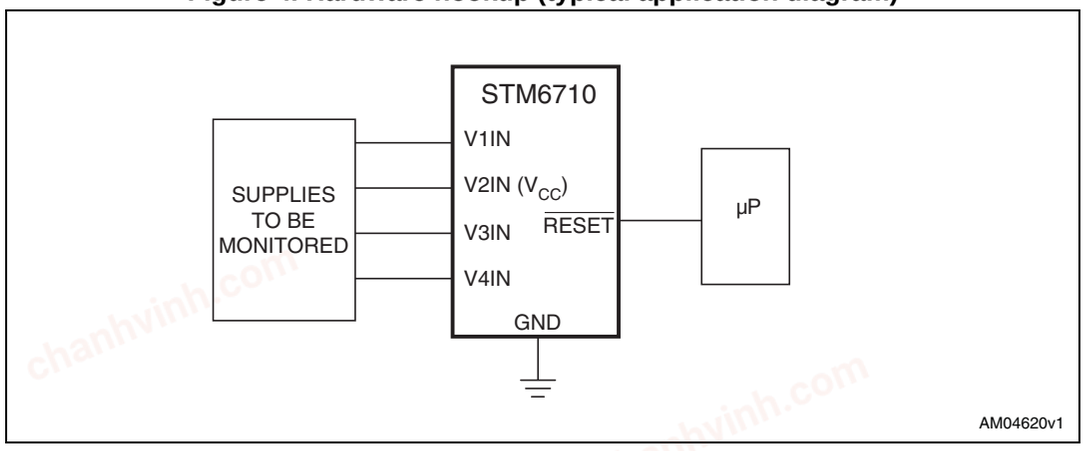

4.1 $\overline{\text{RESET}}$ output configuration

The $\overline{\text{RESET}}$ output asserts low if a monitored input voltage drops below its threshold. This is an open drain with a weak internal pull-up to V2IN or the V_{CC} supply, and is typically 10 µA. However, many applications may not require an external pull-up resistor. In case a pull-up resistor is required and is connected to a voltage ranging from 0 to 5.5 V (as shown in *Figure 5*), it can overdrive the weak internal pull-up. The STM6710 has built-in circuitry to prevent this reverse current flow to V2IN under this condition.

Figure 5. Interface to external pull-up using a different supply voltage

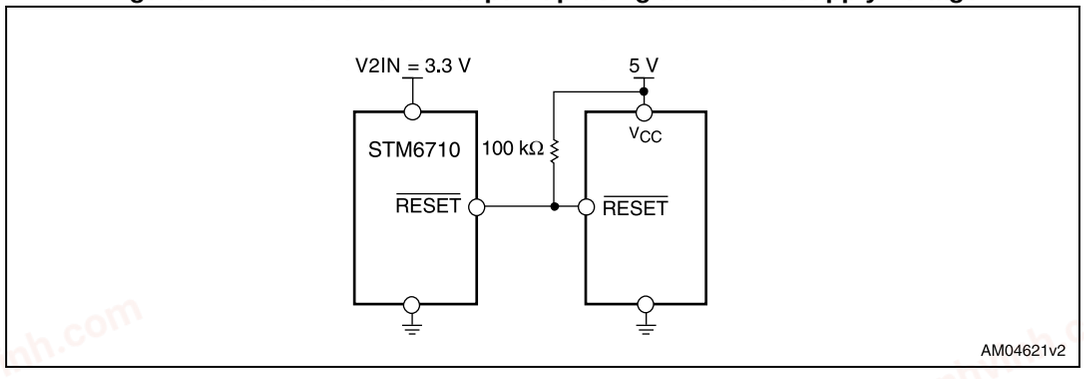

chanhvinh.com

Figure 6. $\overline{\text{RESET}}$ output diagram

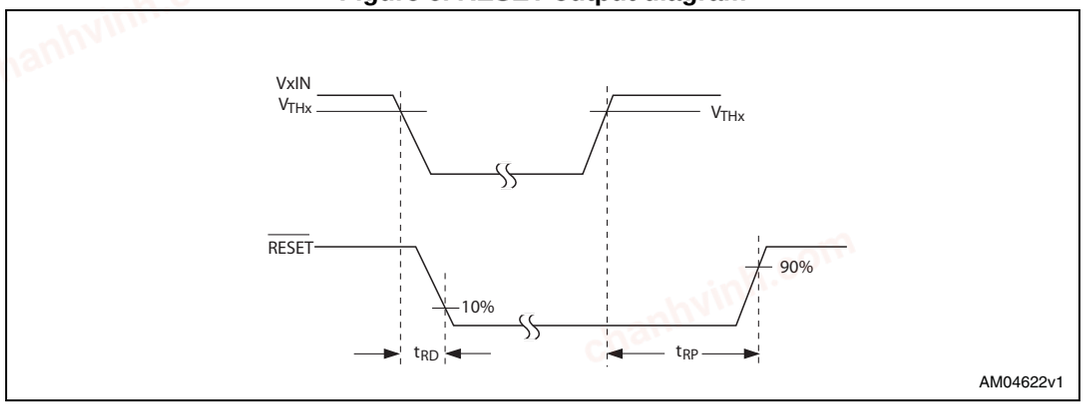

chanhvinh.com

4.2 Adjustable thresholds (input configurations)

The STM6700/STM6710 may be configured to monitor several options with adjustable reset thresholds. The threshold voltages at each adjustable input VxIN is typically 0.62 V. Thus to monitor a voltage > 0.62 V, a resistor divider network as shown in *Figure 7* can be used.

The STM6710 allows users to customize the minimum voltage sense level with adjustable reset thresholds. The threshold voltage at each adjustable input VxIN is typically 0.62 V. For example, the user can adjust the voltage input threshold (VTHx) for V1IN, V3IN and V4IN inputs. To do this, connect an external resistor divider network to the VxIN pin in order to set the trip point to some other voltage above 620 mV according to *Equation 1* and *Equation 2* which is also shown in *Figure 7*.

Equation 1

$$V_{THx} = 0.62V \times \frac{(R1 + R2)}{R2}$$

or solved in terms of R1:

Equation 2

$$R1 = R2\left(\frac{V_{THX}}{0.62V} - 1\right)$$

The STM6700/STM6710 have an input current of less than ±0.2 µA (±0.4 µA for VIN1) on their adjustable inputs, therefore resistor values of up to 100 kW can be used for R2 with < 1 % error.

Figure 7. Adjustable thresholds monitoring

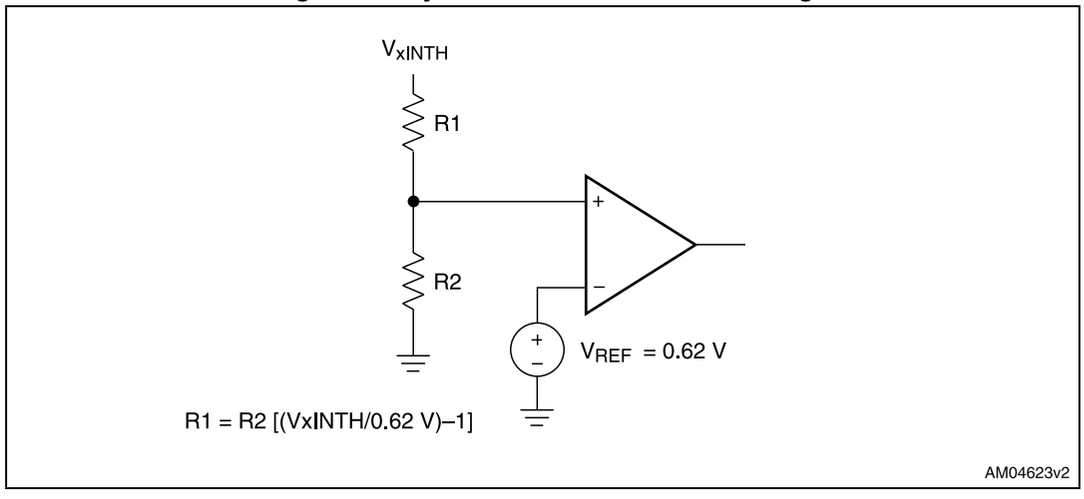

chanhvinh.com

4.3 Unused inputs

Connect unused monitor inputs to a supply voltage greater in magnitude than their specified threshold voltages. For unused VxIN adjustable inputs connect a 1 MW resistor between the unused input and V2IN or (V_{CC}) to limit the bias current. Use V2IN for normal operation (device power supply pin). Do not connect unused monitor inputs to ground or allow them to float.

4.4 Adding manual reset capability

Figure 8 shows a circuit which can be used to add manual reset capability to the STM6710. Depressing the push button switch short-circuits the analog input to ground and initiates a $\overline{\text{RESET}}$ pulse. The switch must be open for at least 140 ms in order to deassert the $\overline{\text{RESET}}$ output. No external switch debounce is required. A small capacitor may be used to improve noise immunity. *Figure 8* shows the addition of the manual reset capability.

Figure 8. Adding manual reset capability for STM6710 input

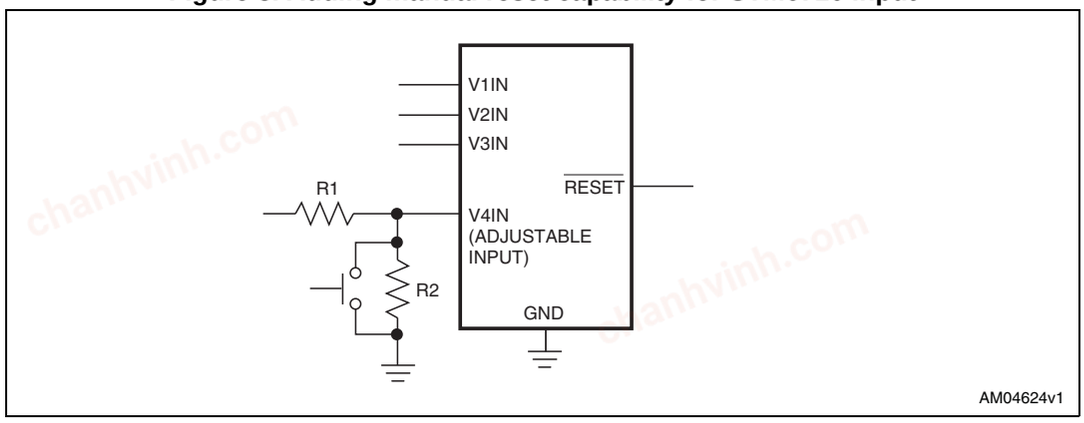

chanhvinh.com

5 Maximum ratings

Stressing the device above the ratings listed in *Table 3* may cause permanent damage to the device. These are stress ratings only and operation of the device at these or any other conditions above those indicated in *Table 4* of this specification is not implied. Exposure to absolute maximum rating conditions for extended periods may affect device reliability. Refer also to the STMicroelectronics™ SURE program and other relevant quality documents.

Table 3. Absolute maximum ratings

Symbol	Parameter	Value	Unit
T_{STG}	Storage temperature (V_{CC} off)	–55 to 150	°C
T_{SLD} (1)	Lead solder temperature for 10 seconds	260	
V_{IO}	Input or output voltage	–0.3 to V_{CC} + 0.3	V
V_{CC}	Supply voltage	–0.3 to + 7	
I_O	Output current	20	mA
q_{JA}	Thermal resistance (junction to ambient)	N/A	°C/W

1. Reflow at peak temperature of 260 °C. The time above 255 °C must not exceed 30 seconds.

chanhvinh.com

6 DC and AC parameters

This section summarizes the DC and AC characteristics of the device. The parameters in *Table 5* are derived from tests performed under the test conditions. Designers should check that the operating conditions in their circuit match the operating conditions when relying on the quoted parameters.

Table 4. Operating and AC measurement conditions

Parameter	Conditions	Unit
V2IN supply voltage (T_A = 0 to T_max °C)	1.0 to 5.5	V
V2IN supply voltage (T_A = -40 to T_max °C)	1.2 to 5.5	
V_{CC} supply voltage (for STM6700 and STM6710Q)	2.0 to 5.5	
Ambient operating temperature (T_A)	-40 to 105	°C

Table 5. DC and AC characteristics

Alt.	Symbol	Parameter	Test conditions	Min.	Typ.(1)	Max.	Unit
V_{CC}	V2IN	Operating voltage	T_A = 0 to T_max °C	1.0		5.5	V
			T_A = –40 to T_max °C	1.2		5.5	
	V_{CC}	STM6700 and STM6710Q		2.0		5.5	
	IxIN	Input current	VxIN nominal input voltage (1.8 V, 2.5 V, 5.0 V supplies)		25	40	µA
			V2IN = nominal input voltage for 3.0 V and 3.3 V supplies		55	115	
			V1IN = 0 to 0.85 V (for adjustable thresholds)			0.4	
			V3IN, V4IN = 0 to 0.85 V (for adjustable thresholds)			0.2	
I_{CC}	I2N	I2N input current	STM6700 and STM6710Q only V_{CC} = 5.5 V		35	50	µA
Voltage thresholds							
Vrst	V_{TH}	VxIN falling	5 V (–5%)	4.500	4.630	4.750	V
			5 V (–10%)	4.250	4.380	4.450	
			3.3 V (–5%)	3.000	3.080	3.150	
			3.3 V (–10%)	2.850	2.930	3.000	
			3.0 V (–5%)	2.700	2.780	2.850	
			3.0 V (–10%)	2.550	2.630	2.70	
			2.5 V (–5%)	2.250	2.320	2.380	
			2.5 V (–10%)	2.130	2.190	2.250	
			1.8 V (–5%)	1.620	1.670	1.710	

chanhvinh.com

Table 5. DC and AC characteristics (continued)

Alt.	Symbol	Parameter	Test conditions	Min.	Typ.(1)	Max.	Unit
Vrst	V_{TH}	VxIN falling	1.8 V (–10%)	1.530	1.580	1.620	V
Vrstxin	V_{REF}	V1IN, V2IN, V3IN, V4IN adj. reset threshold voltage	VxIN decreasing	0.611	0.620	0.629	
V_{HYST}		Hysteresis of V_{TH}			0.3		% V_{TH}
	TCVTH	Reset threshold temperature coefficient			60		ppm/°C
Reset							
t_{RD}	t_{RPD}	V_{TH} to reset asserted delay	VxIN falling at 10 mV/µs from V_{TH} to (V_{TH} –50 mV)		30		µs
t_{RP}	t_{REC}	Reset timeout delay	STM6710	140	200	280	ms
t_{PD}		Propagation delay	STM6700 only		5		µs
	V_{OL}	$\overline{RESET}$ output low	V2IN, V_{CC} = 5 V, I_{SINK} = 2 mA			0.3	V
			V2IN, V_{CC} = 2.5 V, I_{SINK} = 1.2 mA			0.4	
			V2IN = 1.0 V, I_{SINK} = 50 µA, T_A = 0 to T_max °C			0.3	
	V_{OH}	$\overline{RESET}$ output high	V_{CC} ³ 2.0 V, I_{SOURCE} = 6 µA, $\overline{RESET}$ deasserted (STM6700)	0.8 x V_{CC}			
			V_{CC} ³ V_{TH}, I_{SOURCE} = –6 µA, $\overline{RESET}$ deasserted	0.8 x V2IN			
	I_{OH}	$\overline{RESET}$ output high source current	V2IN ³ 2.0 V, $\overline{RESET}$ deasserted		10		µA

1. V2IN = 1 V to 5.5 V, T_A = –40 to T_max °C, unless otherwise stated. Typical values are at V2IN = 3.0 V to 3.3 V, T_A = +25 °C. T_max = 85 °C or 105 °C depending on the product version.

chanhvinh.com

7 Package mechanical data

In order to meet environmental requirements, ST offers these devices in different grades of ECOPACK packages, depending on their level of environmental compliance. ECOPACK specifications, grade definitions and product status are available at: *www.st.com*. ECOPACK is an ST trademark.

7.1 SOT23 - 6-lead small outline transistor package information

Figure 9. SOT23 – 6-lead small outline transistor package outline

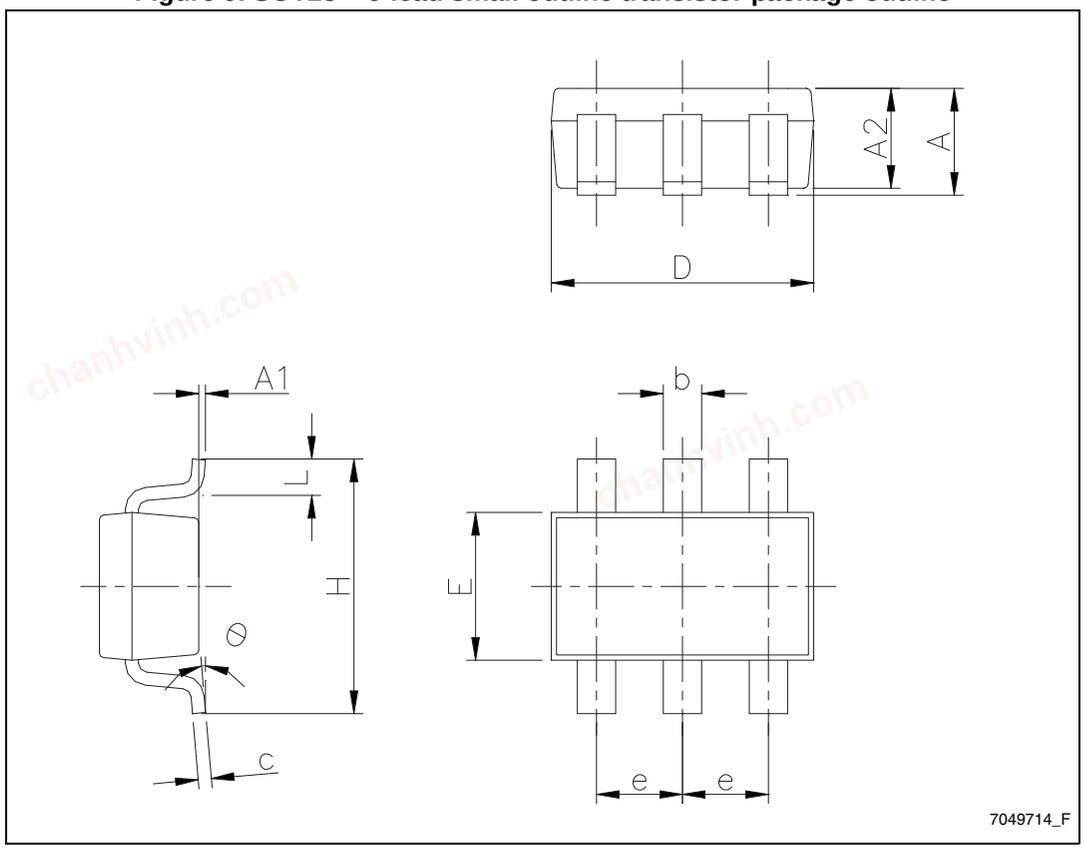

chanhvinh.com

Table 6. SOT23 – 6-lead small outline transistor package mechanical data

Symbol	Dimensions					
	mm			inches		
	Min.	Typ.	Max.	Min.	Typ.	Max.
A	0.9		1.45	0.035		0.057
A1	0		0.10	0		0.0039
A2	0.9		1.3	0.035		0.0512
b	0.35		0.5	0.014		0.02
c	0.09		0.2	0.004		0.008
D	2.8		3.05	0.11		0.120
E	1.5		1.75	0.059		0.0689
e		0.95			0.037	
H	2.6		3	0.102		0.118
L	0.1		0.6	0.004		0.024
q	0°		10°	0°		10°

Figure 10. SOT23-6 landing pattern

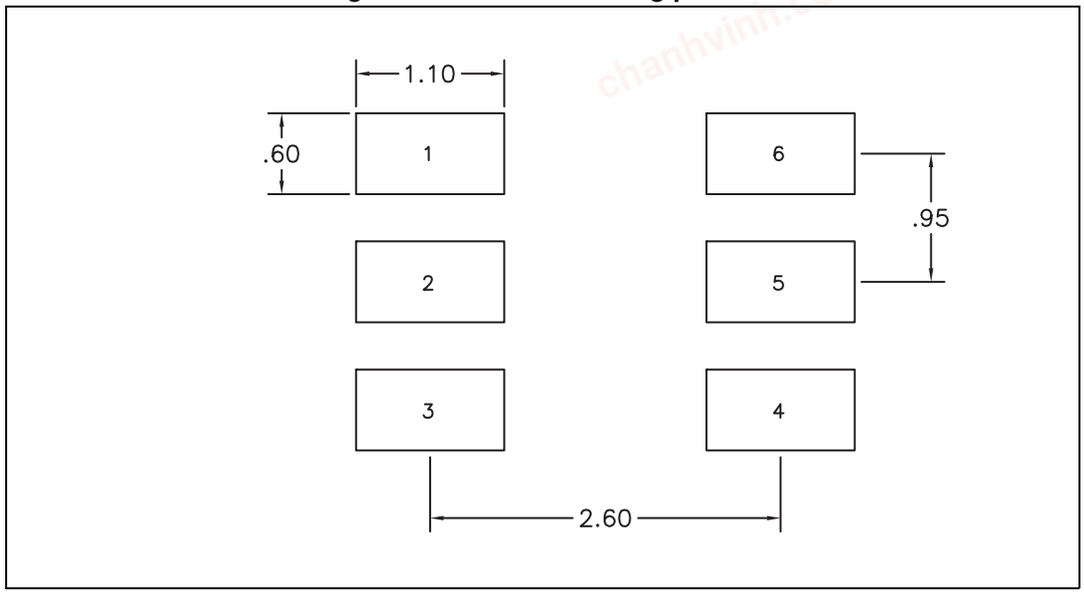

chanhvinh.com

Figure 11. Carrier tape for SOT23-6

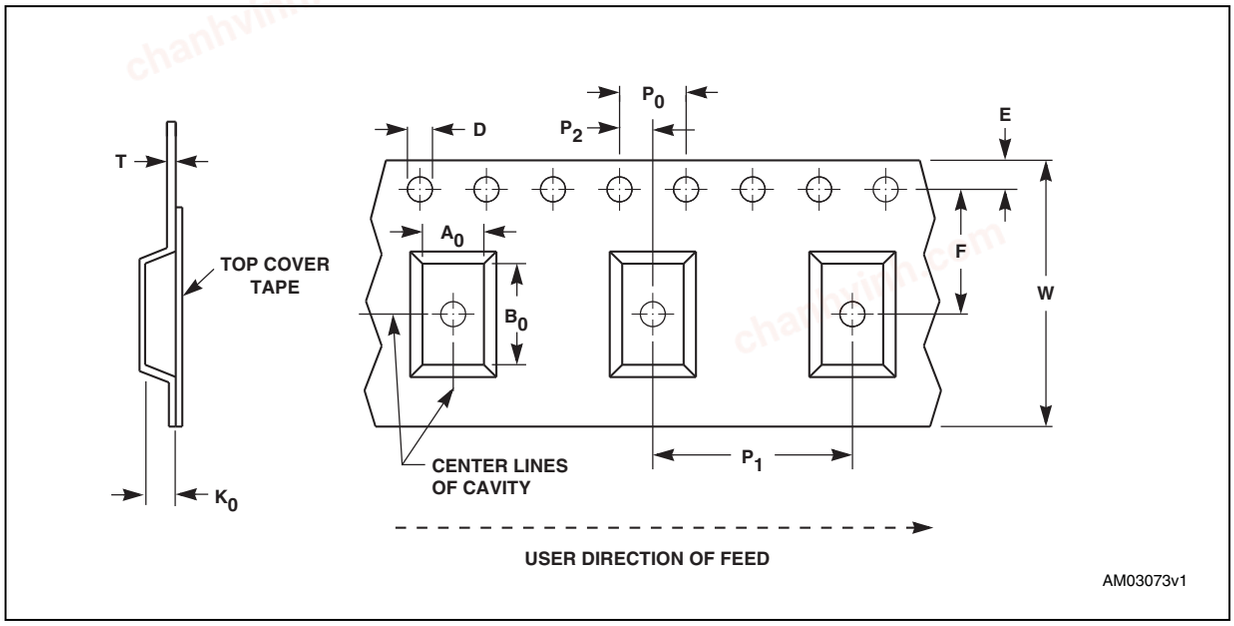

Table 7. Carrier tape dimensions for SOT23-6

Package	W	D	E	P_0	P_2	F	A_0	B_0	K_0	P_1	T	Unit	Bulk qty.
SOT23-6	8.00 +0.30/ –0.10	1.50 +0.10/ –0.00	1.75 ±0.10	4.00 ±0.10	2.00 ±0.10	3.50 ±0.05	3.23 ±0.10	3.17 ±0.10	1.37 ±0.10	4.00 ±0.10	0.254 ±0.013	mm	3000

chanhvinh.com

8 Part numbering

Table 8. Ordering information scheme

Example: STM6710 F WB 6 F

Device type

STM6700 (1)

STM6710

Threshold combination

Refer to *Table 9*

Package

WB = SOT23-6

Temperature range

6 = –40 to 85 °C

7 = –40 to 105 °C

Shipping method

F = ECOPACK® package, tape and reel packing

1. Contact local ST sales office for availability

For other options, or for more information on any aspect of this device, please contact the ST sales office nearest you.

chanhvinh.com

9 STM6700 / STM6710 device selector guide

The STM6700/STM6710 are designed for various voltage thresholds and configurations, however not all variations are shown in *Table 9*. Please contact local ST sales office for availability.

Table 9. STM6700/STM6710 device selector summary

Order code	Monitored pins				Supply pin	t_{REC} (ms)	Supply tolerance (%)	Top marking	Comments
	V1IN (V)	V2IN (V)	V3IN (V)	V4IN (V)					
STM6710AWB6F	5	3.3	2.5	Adj.	V2IN	200	10	D6BA	Contact ST sales office
STM6710BWB6F							5	D6BB	
STM6710CWB6F			1.8				10	D6BC	
STM6710DWB6F							5	D6BD	**Available**
STM6710EWB6F	Adj.		2.5	1.8			10	D6BE	Contact ST sales office
STM6710FWB6F							5	D6BF	**Available**
STM6710FWB7F								D7BF	
STM6710GWB6F	5		Adj.	Adj.			10	D6BG	Contact ST sales office
STM6710HWB6F							5	D6BH	
STM6710IWB6F	Adj.		2.5				10	D6BI	
STM6710JWB6F							5	D6BJ	**Available**
STM6710KWB6F			1.8				10	D6BK	
STM6710LWB6F							5	D6BL	
STM6710LWB7F								D7BL	
STM6710MWB6F		3	2.5				10	D6BM	Contact ST sales office
STM6710NWB6F							5	D6BN	
STM6710OWB6F			1.8				10	D6BO	
STM6710PWB6F							5	D6BP	
STM6710QWB6F		V_{CC}	Adj.		V_{CC}	N/A	N/A	D6BQ	

chanhvinh.com

10 Revision history

Table 10. Document revision history

Date	Revision	Changes
09-Dec-2009	1	Initial release.
15-May-2012	2	Added *Table 4* and cross-reference to *Table 4* in *Section 5*, updated *Section 1*, *Table 9*, minor corrections throughout document.
11-Feb-2015	3	Added order code STM6710FWB7F and updated temperature range throughout document from “-40 °C to 85 °C” to “-40 °C to 105 °C”. *Table 1* and *Table 9*: replaced “part number/name” with “order code”. *Table 9*: removed order code STM6700WB6F
24-Sep-2020	4	Updated *Table 1: Device summary* and *Table 9: STM6700/STM6710 device selector summary*.

chanhvinh.com

chanhvinh.com
chanhvinh.com
chanhvinh.com
chanhvinh.com
chanhvinh.com

IMPORTANT NOTICE – PLEASE READ CAREFULLY

STMicroelectronics NV and its subsidiaries (“ST”) reserve the right to make changes, corrections, enhancements, modifications, and improvements to ST products and/or to this document at any time without notice. Purchasers should obtain the latest relevant information on ST products before placing orders. ST products are sold pursuant to ST’s terms and conditions of sale in place at the time of order acknowledgement.

Purchasers are solely responsible for the choice, selection, and use of ST products and ST assumes no liability for application assistance or the design of Purchasers’ products.

No license, express or implied, to any intellectual property right is granted by ST herein.

Resale of ST products with provisions different from the information set forth herein shall void any warranty granted by ST for such product.

ST and the ST logo are trademarks of ST. For additional information about ST trademarks, please refer to *www.st.com/trademarks*. All other product or service names are the property of their respective owners.

Information in this document supersedes and replaces information previously supplied in any prior versions of this document.

© 2020 STMicroelectronics – All rights reserved

chanhvinh.com
chanhvinh.com