chanhvinh.com

life.augmented

STGAP2SICS

Datasheet

Galvanically isolated 4 A single gate driver for SiC MOSFETs



SO-8W

Features

- High voltage rail up to 1200 V
- Driver current capability: 4 A sink/source @25°C
- dV/dt transient immunity ±100 V/ns in full temperature range
- Overall input-output propagation delay: 75 ns
- Separate sink and source option for easy gate driving configuration
- 4 A Miller CLAMP dedicated pin option
- UVLO function
- Gate driving voltage up to 26 V
- 3.3 V, 5 V TTL/CMOS inputs with hysteresis
- Temperature shut-down protection
- Standby function
- 6 kV galvanic isolation
- Wide body SO-8W package

Description

The STGAP2SICS is a single gate driver which provides galvanic isolation between the gate driving channel and the low voltage control and interface circuitry.

The gate driver is characterized by 4 A capability and rail-to-rail outputs, making the device also suitable for mid and high power applications such as power conversion and motor driver inverters in industrial applications. The device is available in two different configurations. The configuration with separated output pins allows to independently optimize turn-on and turn-off by using dedicated gate resistors. The configuration featuring single output pin and Miller CLAMP function prevents gate spikes during fast commutations in half-bridge topologies. Both configurations provide high flexibility and bill of material reduction for external components.

The device integrates protection functions: UVLO with optimized value for SiC MOSFETs and thermal shut down are included to facilitate the design of highly reliable systems. Dual input pins allow the selection of signal polarity control and implementation of HW interlocking protection to avoid cross-conduction in case of controller malfunction. The input to output propagation delay is less than 75 ns, which delivers high PWM control accuracy. A standby mode is available to reduce idle power consumption.

Product status link

STGAP2SICS

Product label

SUSTAINABLE TECHNOLOGY

chanhvinh.com

1 Block diagram

Figure 1. **Block diagram - Single output and Miller Clamp configuration**

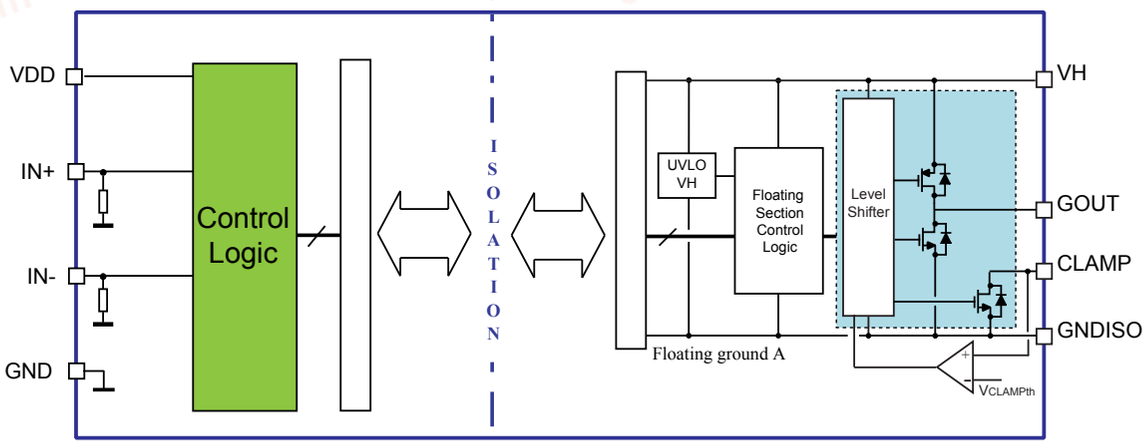

Figure 2. **Block diagram - Separate output configuration**

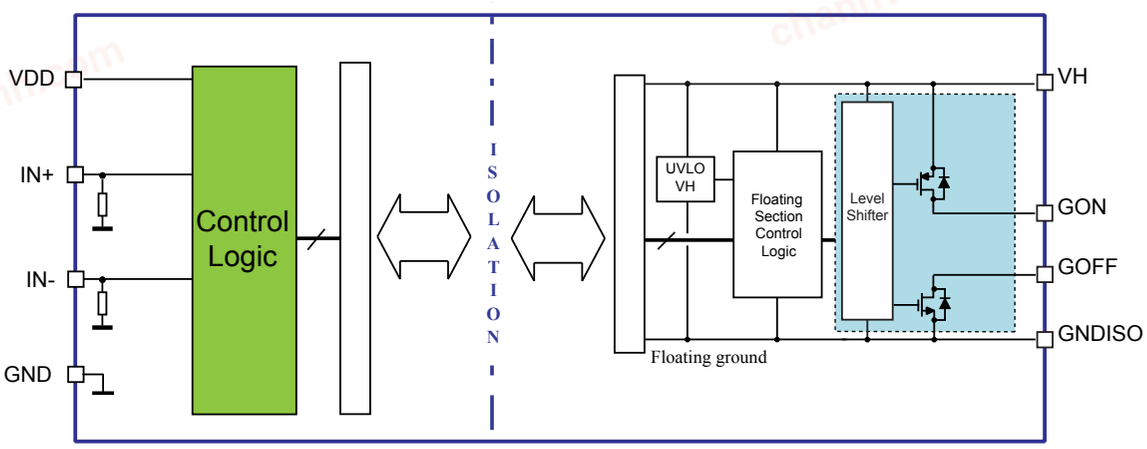

chanhvinh.com

2 Pin description and connection diagram

Figure 3. **Pin connection (top view) - Single output and Miller CLAMP option**

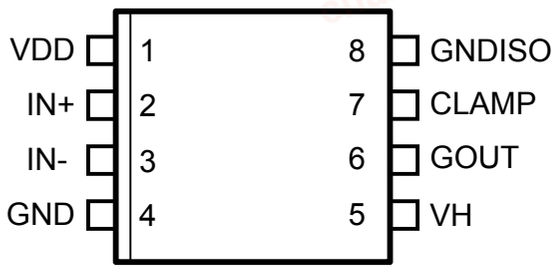

Figure 4. **Pin connection (top view) - Separated outputs option**

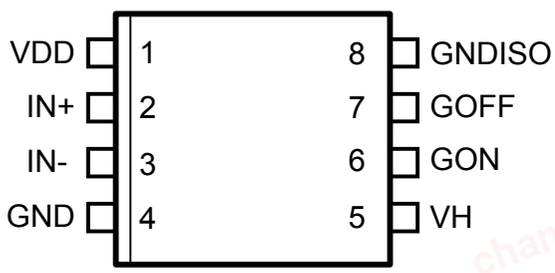

Table 1. **Pin Description**

Pin #		Pin Name	Type	Function
Figure 4	Figure 3			
1	1	VDD	Power Supply	Driver logic supply voltage.
2	2	IN+	Logic Input	Driver logic input, active high.
3	3	IN-	Logic Input	Driver logic input, active low.
4	4	GND	Power Supply	Driver logic ground.
5	5	VH	Power Supply	Gate driving positive voltage supply.
-	6	GOUT	Analog Output	Sink/Source output.
-	7	CLAMP	Analog Output	Active Miller Clamp.
6	-	GON	Analog Output	Source output.
7	-	GOFF	Analog Output	Sink output.
8	8	GNDISO	Power Supply	Gate driving Isolated ground.

chanhvinh.com

3 Electrical data

3.1 Absolute maximum ratings

Table 2. **Absolute maximum ratings**

Symbol	Parameter	Test condition	Min.	Max.	Unit
VDD	Logic supply voltage vs. GND	-	-0.3	6.5	V
V_{LOGIC}	Logic pins voltage vs. GND	-	-0.3	6.5	V
VH	Positive supply voltage (VH vs. GNDISO)	-	-0.3	28	V
V_{OUT}	Voltage on gate driver outputs (GON, GOFF, CLAMP VS. GNDISO)	-	-0.3	VH+0.3	V
T_J	Junction temperature	-	-40	150	°C
T_S	Storage temperature	-	-50	150	°C
ESD	HBM (human body model)	-	2		kV

3.2 Thermal data

Table 3. **Thermal data**

Symbol	Parameter	Package	Value	Unit
$R_{th(JA)}$	Thermal resistance junction to ambient	SO-8W	118	°C/W

3.3 Recommended operating conditions

Table 4. **Recommended operating conditions**

Symbol	Parameter	Test conditions	Min.	Max.	Unit
VDD	Logic supply voltage vs. GND	-	3	5.5	V
V_{LOGIC}	Logic pins voltage vs. GND	-	0	5.5	V
VH	Positive supply voltage (VH vs. GNDISO)	-	Max(VH_{ON})	26	V
F_{SW}	Maximum switching frequency(1)	-	-	1	MHz
T_{OUT}	Output Pulse width	-	100	-	ns
T_J	Operating Junction Temperature	-	-40	125	°C

1. *Actual limit depends on power dissipation and T_J.*

chanhvinh.com

4 Electrical characteristics

Table 5. Electrical characteristics (T_J = 25°C, VH = 15 V, VDD = 5 V unless otherwise specified)

Symbol	Pin	Parameter	Test conditions	Min.	Typ.	Max.	Unit
Dynamic charact eristics							
t_{Don}	IN+, IN-	Input to output propagation delay ON	-	50	75	90	ns
t_{Doff}	IN+, IN-	Input to output propagation delay OFF	-	50	75	90	ns
t_r	-	Rise time	CL = 4.7 nF See Figure 1	-	30	-	ns
t_f	-	Fall time		-	30	-	ns
PWD	-	Pulse Width Distortion $\|t_{Don}-t_{Doff}\|$	-	-	-	20	ns
$t_{deglitch}$	IN+, IN-	Inputs deglitch filter	-	-	20	40	ns
CMTI (1)	-	Common-mode transient immunity, |dVISO/dt|	VCM = 1500 V, See Figure 2	100	-	-	V/ns
Supply voltage							
VH_{on}	-	VH UVLO turn-on threshold	-	14.6	15.5	16.4	V
VH_{off}	-	VH UVLO turn-off threshold	-	13.9	14.8	15.7	V
VH_{hyst}	-	VH UVLO hysteresis	-	600	750	950	mV
I_{QHU}	-	VH undervoltage quiescent supply current	VH = 7V	-	1.3	1.8	mA
I_{QH}	-	VH quiescent supply current	-	-	1.3	1.8	mA
I_{QHSBY}	-	Standby VH quiescent supply current	Standby mode	-	400	550	µA
SafeClp	-	GOFF active clamp	I_{GOFF} = 0.2 A; VH floating	-	2	2.3	V
I_{QDD}	-	VDD quiescent supply current	-	-	1.0	1.3	mA
I_{QDDSBY}	-	Standby VDD quiescent supply current	Standby mode	-	40	65	µA
Logic Inputs							
V_{il}	IN+, IN-	Low level logic threshold voltage	-	0.29·VDD	0.33·VDD	0.37·VDD	V
V_{ih}	IN+, IN-	High level logic threshold voltage	-	0.62·VDD	0.66·VDD	0.70·VDD	V
I_{INh}	IN+, IN-	INx logic “1” input bias current	IN_x = 5 V	33	50	70	µA
I_{INl}	IN+, IN-	INx logic “0” input bias current	IN_x = GND	-	-	1	µA
R_{pd}	IN+, IN-	Inputs pull-down resistors	IN_x = 5 V	70	100	150	kΩ
Driver buffer section							
I_{GON}	-	Source short circuit current	T_J = 25°C	-	4	-	A
			T_J = -40 to +125°C	3	-	5	A
V_{GONH}	-	Source output high level voltage	I_{GON} = 100 mA	VH-0.15	VH-0.125	-	V

chanhvinh.com

Symbol	Pin	Parameter	Test conditions	Min.	Typ.	Max.	Unit
R_{GON}	-	Source R_{DS_ON}	I_{GON} = 100 mA	-	1.25	1.5	Ω
I_{GOFF}	-	Sink short-circuit current	T_J = 25°C	-	4	-	A
			T_J = -40 to +125°C	3	-	5.5	
V_{GOFFL}	-	Sink output low level voltage	I_{GOFF} = 100 mA	-	110	120	mV
R_{GOFF}	-	Sink R_{DS_ON}	I_{GOFF} = 100 mA	-	1.1	1.2	Ω
Miller Clamp							
$V_{CLAMPth}$	-	CLAMP voltage threshold	V_{CLAMP} vs.GNDISO	1.3	2	2.6	V
I_{CLAMP}	-	CLAMP short-circuit current	V_{CLAMP} = 15V				A
			T_J = 25°C	-	4	-	
			T_J = -40 to +125°C	2	-	5	
V_{CLAMP_L}	-	CLAMP low level output voltage	I_{CLAMP} = 100mA	-	96	115	mV
R_{CLAMP}	-	CLAMP R_{DS_ON}	I_{CLAMP} = 100mA	-	0.96	1.15	Ω
Over-temperature protection							
T_{SD}	-	Shutdown temperature	-	170	-	-	°C
T_{hys}	-	Temperature hysteresis	-	-	20	-	°C
Standby							
t_{STBY}	-	Standby time	See Control inputs	200	280	400	µs
t_{WUP}	-	Wake-up time	See Control inputs	10	20	35	µs
t_{awake}	-	Wake-up delay	See Control inputs	90	140	200	µs
$t_{stbyfilt}$	-	Standby filter	See Control inputs	200	280	700	ns

1. *Characterization data, not tested in production.*

chanhvinh.com

5 Isolation

Table 6. Isolation and safety-related specifications

Parameter	Symbol	Value	Unit	Conditions
Clearance (Minimum External Air Gap)	CLR	8	mm	Measured from input terminals to output terminals, shortest distance through air
Creepage (*) (Minimum External Tracking)	CPG	8	mm	Measured from input terminals to output terminals, shortest distance path along body
Comparative Tracking Index (Tracking Resistance)	CTI	≥ 400	V	DIN IEC 112/VDE 0303 Part 1
Isolation Group	-	II	-	Material Group (DIN VDE 0110, 1/89, Table 1)

Table 7. Isolation characteristics

Parameter	Symbol	Test Conditions	Characteristic	Unit
Maximum Working Isolation Voltage	V_{IORM}	-	1200	V_{PEAK}
Input to Output test voltage In accordance with VDE 0884-11	V_{PR}	Method a, Type test	1920	V_{PEAK}
		$V_{PR} = V_{IORM} \times 1.6$, t_m = 10 s		
		Partial discharge < 5 pC		
		Method b, 100 % Production test	2250	V_{PEAK}
		$V_{PR} = V_{IORM} \times 1.875$, t_m = 1 s		
		Partial discharge < 5 pC		
Transient Overvoltage (Highest Allowable Overvoltage)	V_{IOTM}	t_{ini} = 60 s Type test	6000	V_{PEAK}
Maximum Surge TestVoltage	V_{IOSM}	Type test	6000	V_{PEAK}
Isolation Resistance	R_{IO}	V_{IO} = 500 V at T_S	$>10^9$	Ω

Table 8. UL 1577

Description	Symbol	Characteristic	Unit
Isolation Withstand Voltage, 1min (Type test)	V_{ISO}	3535/5000	V_{RMS}/V_{PEAK}
Isolation TestVoltage, 1sec (100% production)	$V_{ISOtest}$	4242/6000	V_{RMS}/V_{PEAK}

chanhvinh.com

6 Functional description

6.1 Gate driving power supply and UVLO

The STGAP2SiCS is a flexible and compact gate driver with 4 A output current and rail-to-rail outputs. The device allows implementation of either unipolar or bipolar gate driving.

Figure 5. Power supply configuration for unipolar and bipolar gate driving

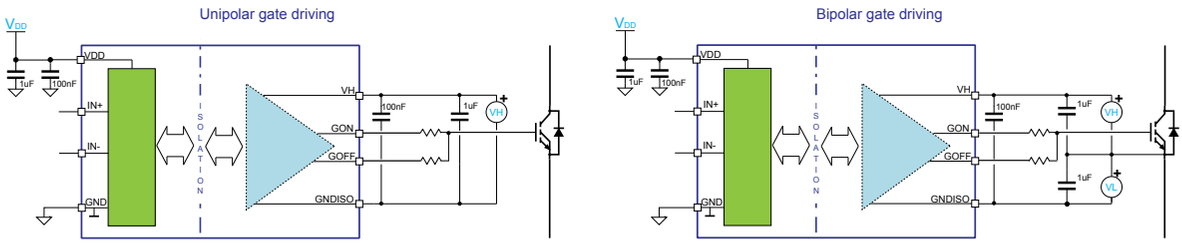

Undervoltage protection is available on VH supply pin. A fixed hysteresis sets the turn-off threshold, thus avoiding intermittent operation.

When VH voltage falls below the VHoff threshold, the output buffer enters a “safe state”. When VH voltage reaches the VHon threshold, the device returns to normal operation and sets the output according to actual input pins status.

The VDD and VH supply pins must be properly filtered with local bypass capacitors. The use of capacitors with different values in parallel provides both local storage for impulsive current supply and high-frequency filtering. The best filtering is obtained by using low-ESR SMT ceramic capacitors and are therefore recommended. A 100 nF ceramic capacitor must be placed as close as possible to each supply pin, and a second bypass capacitor with value in the range between 1 µF and 10 µF should be placed close to it.

6.2 Power-up, power-down and “safe state”

The following conditions define the “safe state”:

- GOFF = ON state;
- GON = High Impedance;
- CLAMP = ON state (for STGAP2SiCSC);

Such conditions are maintained at power-up of the isolated side (VH < VH_{on}) and during whole device power down phase (VH < VH_{off}), regardless of the value of the input pins.

The device integrates a structure which clamps the driver output to a voltage not higher than SafeClp when VH voltage is not high enough to actively turn the internal GOFF MOSFET on. If VH positive supply pin is floating or not supplied the GOFF pin is therefore clamped to a voltage smaller than SafeClp.

If the supply voltage VDD of the control section of the device is not supplied, the output is put in safe state, and remains in such condition until the VDD voltage returns within operative conditions.

After power-up of both isolated and low voltage sides, the device output state depends on the status of the input pins.

chanhvinh.com

6.3 Control inputs

The device is controlled through the IN+ and IN- logic inputs, in accordance with the truth table below.

Table 9. Inputs truth table (applicable when device is not in UVLO or "safe state")

Input pins		Output pins	
IN+	IN-	GON	GOFF
L	L	OFF	ON
H	L	ON	OFF
L	H	OFF	ON
H	H	OFF	ON

A deglitch filter allows input signals with duration shorter than tdeglitch to be ignored, thereby preventing noise spikes potentially present in the application from generating unwanted commutations.

6.4 Miller Clamp function

The Miller clamp function allows the control of the Miller current during the power stage switching in half-bridge configurations. When the external power transistor is in the OFF state, the driver operates to avoid the induced turn-on phenomenon that may occur when the other switch in the same leg is being turned on, due to the C_{GD} capacitance.

During the turn-off period the gate of the external switch is monitored through the CLAMP pin. The CLAMP switch is activated when gate voltage goes below the voltage threshold, $V_{CLAMPth}$, thus creating a low impedance path between the switch gate and the GNDISO pin.

6.5 Watchdog

The isolated HV side has a watchdog function in order to identify when it is not able to communicate with LV side, for example because the VDD of the LV side is not supplied. In this case the output of the driver is forced in “safe state” until communication link is properly established again.

6.6 Thermal shutdown protection

The device provides a thermal shutdown protection. When junction temperature reaches the T_{SD} temperature threshold, the device is forced in “safe state”. The device operation is restored as soon as the junction temperature is lower than T_{SD}-T_{hys}.

chanhvinh.com

6.7 Standby function

In order to reduce the power consumption of both control interface and gate driving sides the device can be put in standby mode. In standby mode the quiescent current from VDD and VH supply pins is reduced to I_{QDDSBY} and I_{QHSBY} respectively, and the output remains in “safe state” (the output is actively forced low).

The way to enter standby is to keep both IN+ and IN- high (“standby” value) for a time longer than t_{STBY}. During stand-by the inputs can change from the “standby” value.

To exit stand-by, IN+ and IN- must be put in any combination different from the “standby” value for a time longer than $t_{stbyfilt}$, and then in the “standby” value for a time t such that t_{WUP}<t <t_{STBY}.

When the input configuration is changed from the “standby” value the output is enabled and set according to inputs state after a time t_{awake}.

Figure 6. Standby state sequences

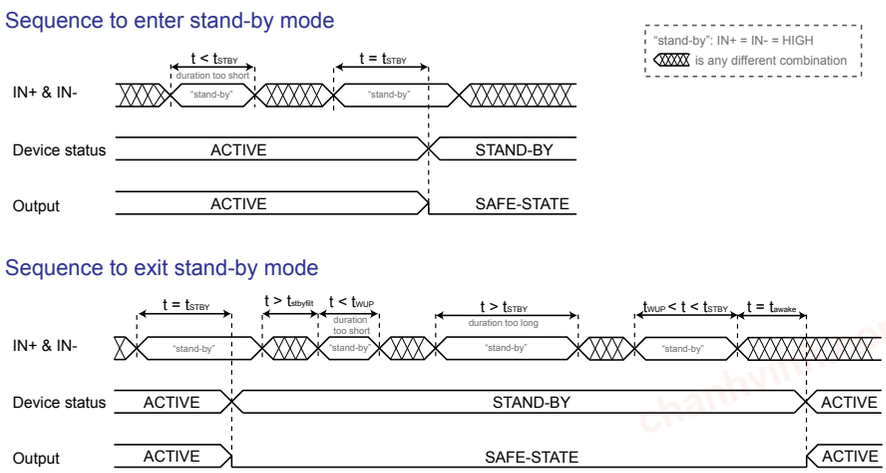

chanhvinh.com

7 Typical application diagram

Figure 7. Typical application diagram - Separated outputs

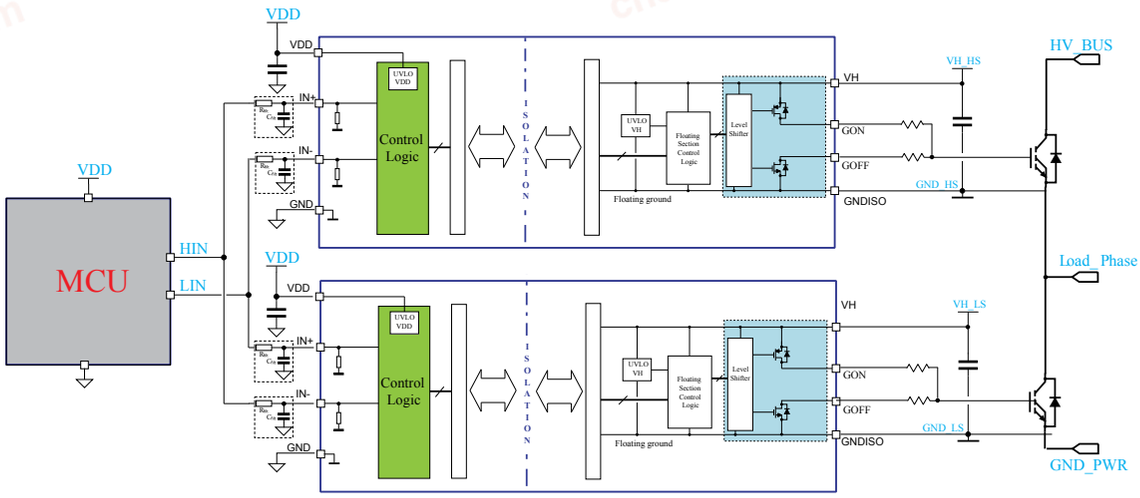

Figure 8. Typical application diagram - Separated outputs and negative gate driving

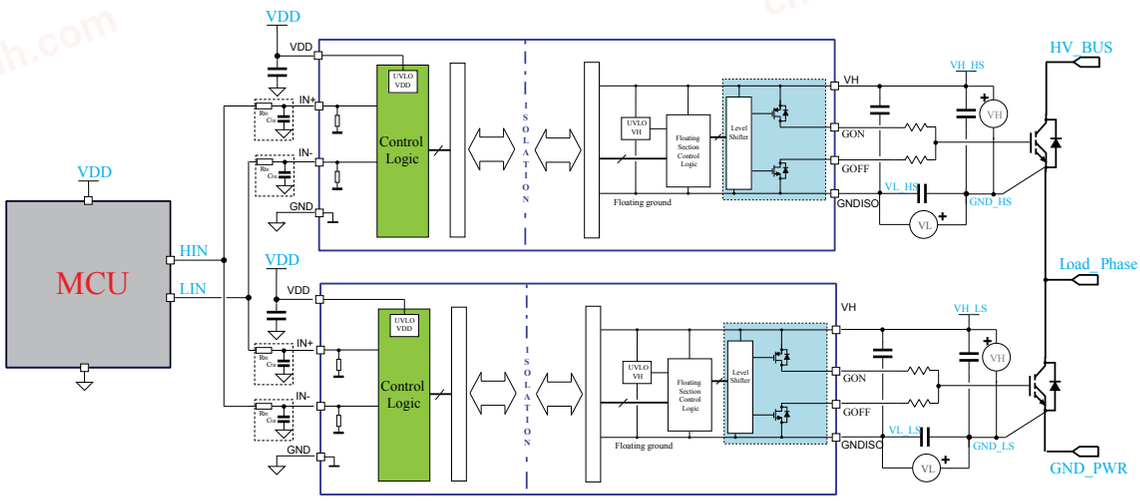

chanhvinh.com

Figure 9. **Typical application diagram - Miller Clamp**

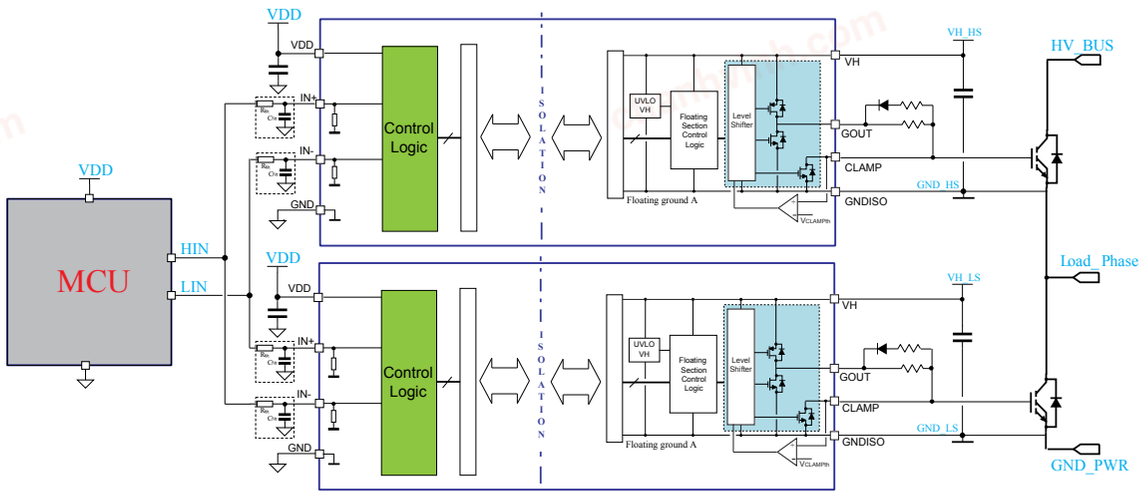

Figure 10. **Typical application diagram - Miller Clamp and negative gate driving**

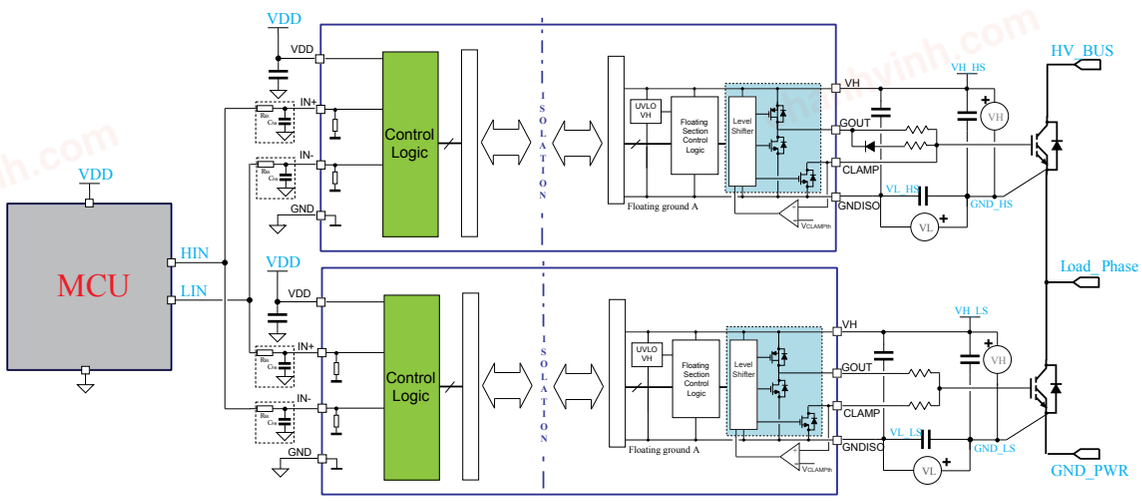

chanhvinh.com

8 Layout

8.1 Layout guidelines and considerations

In order to optimize the PCB layout, the following considerations should be taken into account:

- SMT ceramic capacitors (or different types of low-ESR and low-ESL capacitors) must be placed close to each supply rail pins. A 100 nF capacitor must be placed between VDD and GND and between VH and GNDISO, as close as possible to device pins, in order to filter high-frequency noise and spikes. In order to provide local storage for pulsed current, a second capacitor with a value between 1 µF and 10 µF should also be placed close to the supply pins.
- It is good practice to add filtering capacitors close to logic inputs of the device (IN+, IN-), particularly for fast switching or noisy applications.
- The power transistors must be placed as close as possible to the gate driver to minimize the gate loop area and inductance that might carry noise or cause ringing.
- To avoid degradation of the isolation between the primary and secondary side of the driver, there should not be any trace or conductive area below the driver.
- If the system has multiple layers, it is recommended to connect the VH and GNDISO pins to internal ground or power planes through multiple vias of adequate size. These vias should be located close to the IC pins to maximize thermal conductivity.

8.2 Layout example

An example of STGAP2SiCSC half-bridge suggested PCB layout with main signals highlighted by different colors is shown in Figure 11. It is recommended to follow this example for correct positioning and connection of filtering capacitors.

Figure 11. Half-bridge suggested PCB layout

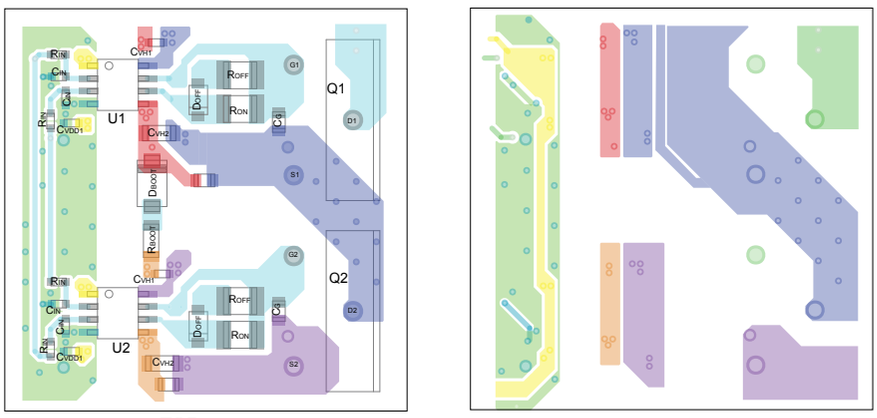

chanhvinh.com

9 Testing and characterization information

Figure 12. **Timings definition**

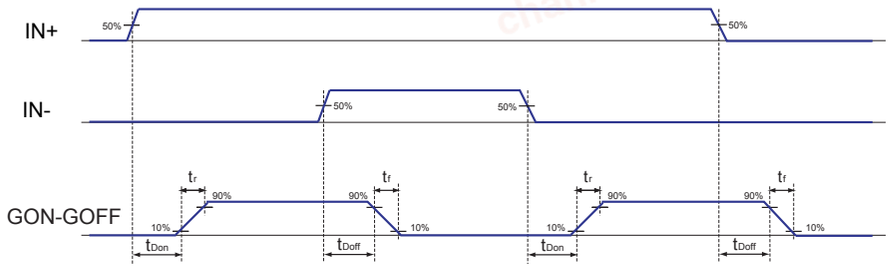

Figure 13. **CMTI test circuit**

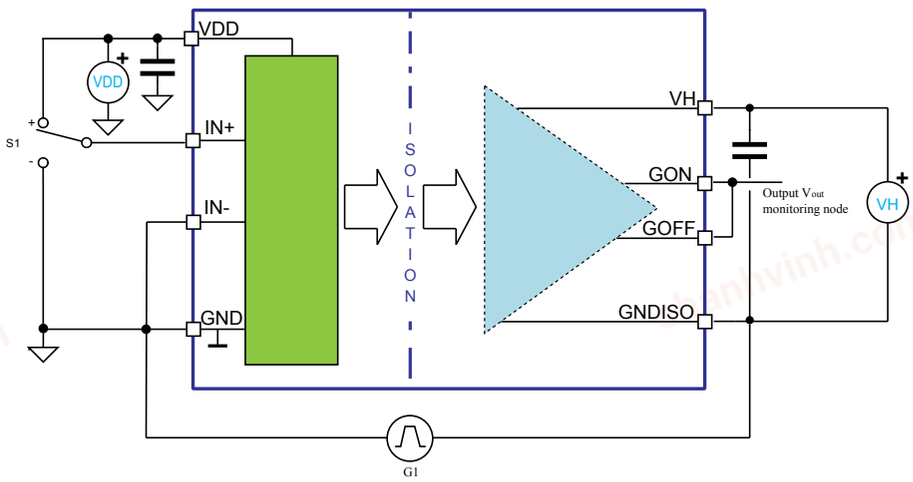

chanhvinh.com

10 Package information

In order to meet environmental requirements, ST offers these devices in different grades of ECOPACK packages, depending on their level of environmental compliance. ECOPACK specifications, grade definitions and product status are available at: www.st.com. ECOPACK is an ST trademark.

chanhvinh.com

10.1 SO-8W package information

Table 10. SO-8W package dimensions

Dimension “D” does not include mold flash, protrusions or gate burrs. Mold flash, protrusions or gate burrs shall not exceed 0.15mm per side.

Symbol	Dimensions (mm)		
	Min.	Typ.	Max
A	2.34		2.64
A1	0.1		0.3
b	0.3		0.51
c	0.2		0.33
D	5.64		6.05
e		1.27 BSC	
E1	7.39		7.59
E	10.11		10.52
L	0.61		0.91
h	0.25		0.76
Θ	0°		8°
aaa		0.25	
bbb		0.25	
ccc		0.1	

Figure 14. SO-8W mechanical data

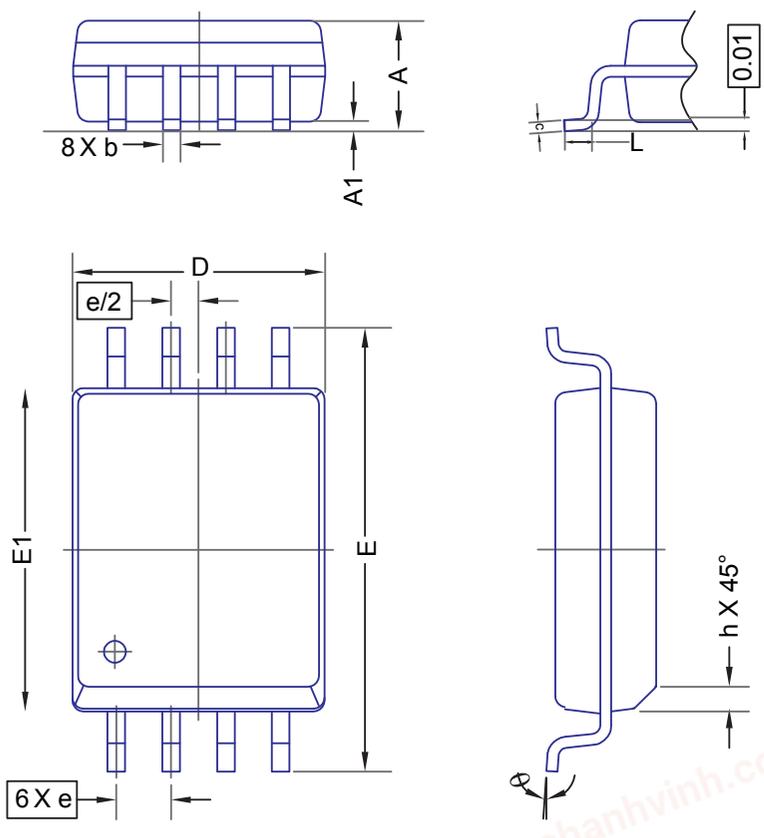

chanhvinh.com

10.2 SO-8W suggested land pattern

Figure 15. SO-8W suggested land pattern

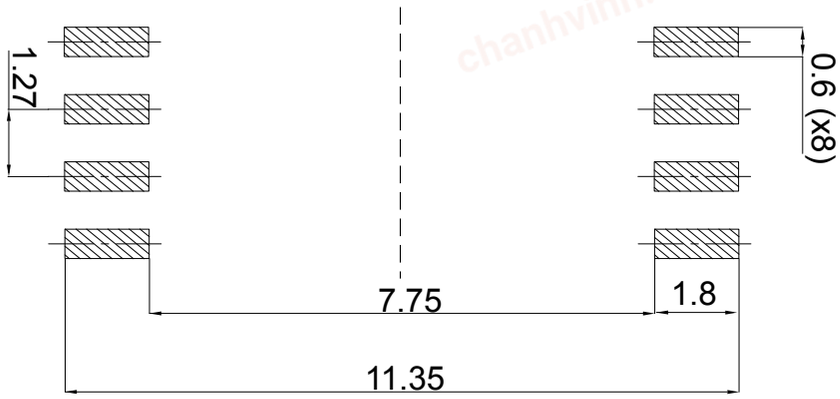

chanhvinh.com

11 Ordering information

Table 11. **Device summary**

Order code	Output configuration	Package marking	Package	Packaging
STGAP2SICSTR	GON-GOFF	GAP2IS	SO-8W	Tape and Reel
STGAP2SICSCTR	GOUT-CLAMP	GAP2SIC	SO-8W	Tape and Reel

chanhvinh.com

Revision history

Table 12. **Document revision history**

Date	Version	Changes
10-Sep-2020	1	Initial release.

chanhvinh.com

chanhvinh.com

Contents

1 Block diagram . . . 2
2 Pin description and connection diagram . . . 3
3 Electrical data . . . 4
3.1 Absolute maximum ratings . . . 4
3.2 Thermal data . . . 4
3.3 Recommended operating conditions . . . 4
4 Electrical characteristics . . . 5
5 Isolation . . . 7
6 Functional description . . . 8
6.1 Gate driving power supply and UVLO . . . 8
6.2 Power-up, power-down and “safe state” . . . 8
6.3 Control inputs . . . 9
6.4 Miller Clamp function . . . 9
6.5 Watchdog . . . 9
6.6 Thermal shutdown protection . . . 9
6.7 Standby function . . . 10
7 Typical application diagram . . . 11
8 Layout . . . 13
8.1 Layout guidelines and considerations . . . 13
8.2 Layout example . . . 13
9 Testing and characterization information . . . 14
10 Package information . . . 15
10.1 SO-8W package information . . . 16
10.2 SO-8W suggested land pattern . . . 17
11 Ordering information . . . 18
Revision history . . . 19
Contents . . . 20
List of tables . . . 22

chanhvinh.com

List of figures. 23

chanhvinh.com

chanhvinh.com

List of tables

Table 1. Pin Description . . . 3
Table 2. Absolute maximum ratings . . . 4
Table 3. Thermal data . . . 4
Table 4. Recommended operating conditions . . . 4
Table 5. Electrical characteristics (T_J = 25°C, VH = 15 V, VDD = 5 V unless otherwise specified) . . . 5
Table 6. Isolation and safety-related specifications . . . 7
Table 7. Isolation characteristics . . . 7
Table 8. UL 1577 . . . 7
Table 9. Inputs truth table (applicable when device is not in UVLO or "safe state") . . . 9
Table 10. SO-8W package dimensions . . . 16
Table 11. Device summary . . . 18
Table 12. Document revision history . . . 19

chanhvinh.com

chanhvinh.com

List of figures

Figure 1. Block diagram - Single output and Miller Clamp configuration . . . 2
Figure 2. Block diagram - Separate output configuration . . . 2
Figure 3. Pin connection (top view) - Single output and Miller CLAMP option . . . 3
Figure 4. Pin connection (top view) - Separated outputs option . . . 3
Figure 5. Power supply configuration for unipolar and bipolar gate driving . . . 8
Figure 6. Standby state sequences . . . 10
Figure 7. Typical application diagram - Separated outputs . . . 11
Figure 8. Typical application diagram - Separated outputs and negative gate driving . . . 11
Figure 9. Typical application diagram - Miller Clamp . . . 12
Figure 10. Typical application diagram - Miller Clamp and negative gate driving . . . 12
Figure 11. Half-bridge suggested PCB layout . . . 13
Figure 12. Timings definition . . . 14
Figure 13. CMTI test circuit . . . 14
Figure 14. SO-8W mechanical data . . . 16
Figure 15. SO-8W suggested land pattern . . . 17

chanhvinh.com

IMPORTANT NOTICE – PLEASE READ CAREFULLY

STMicroelectronics NV and its subsidiaries (“ST”) reserve the right to make changes, corrections, enhancements, modifications, and improvements to ST products and/or to this document at any time without notice. Purchasers should obtain the latest relevant information on ST products before placing orders. ST products are sold pursuant to ST’s terms and conditions of sale in place at the time of order acknowledgement.

Purchasers are solely responsible for the choice, selection, and use of ST products and ST assumes no liability for application assistance or the design of Purchasers’ products.

No license, express or implied, to any intellectual property right is granted by ST herein.

Resale of ST products with provisions different from the information set forth herein shall void any warranty granted by ST for such product.

ST and the ST logo are trademarks of ST. For additional information about ST trademarks, please refer to www.st.com/trademarks. All other product or service names are the property of their respective owners.

Information in this document supersedes and replaces information previously supplied in any prior versions of this document.

© 2020 STMicroelectronics – All rights reserved