chanhvinh.com

STG3157

Low voltage low on-resistance SPDT switch with break-before-make feature

Features

- High speed:
  - t_{PD} = 0.3 ns (max) at V_{CC} = 4.5 V
  - t_{PD} = 0.8 ns (max) at V_{CC} = 3.0 V
  - t_{PD} = 1.2 ns (max) at V_{CC} = 2.3 V
- Ultra low power dissipation:
  - I_{CC} = 1 µA (max) at T_A = 85 °C
- Low on-resistance; at V_{IN} = 0 V:
  - R_{ON} = 7 Ω (max T_A = 85 °C) at V_{CC} = 4.5 V
  - R_{ON} = 9 Ω (max T_A = 85 °C) at V_{CC} = 3.0 V
- Wide operating voltage range:
  - V_{CC} (OPR) = 1.65 V to 5.5 V single supply
- TTL threshold ON control input at V_{CC} = 2.7 to 3.6 V
- Pin and function compatible with 74 series 3157
- Latch-up performance exceeds 150 mA (JESD 17)

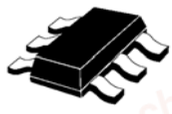

SOT323-6L

Description

The STG3157 is a high-speed CMOS analog SPDT (single-pole double-throw) switch or 2:1 multiplexer/demultiplexer bus switch manufactured using silicon gate C^2MOS technology. It is designed to operate from a 1.65 V to 5.5 V supply, making the device ideal for portable applications.

The STG3157 features very low on-resistance (< 9 Ω) at V_{CC} = 3.0 V. The IN input is provided to control the SPDT switch, and is compatible with standard CMOS output. Switch S1 is ON (connected to common port D) when the IN input is held high, and OFF (a high impedance state exists between the two ports) when IN is held low. Switch S2 is ON (connected to common port D) when the IN input is held low and OFF (a high impedance state exists between the two ports) when IN is held high.

Additional key features are fast switching speed, break-before-make delay time, and very low power consumption. All inputs and outputs are equipped with protection circuits to protect against static discharge, giving them immunity from ESD and transient excess voltage.

Table 1. Device summary

Order code	Package	Packing
STG3157CTR	SOT323-6L	Tape and reel

chanhvinh.com

Contents

1 Pin connections and functions 3

2 Electrical ratings 4

3 Electrical characteristics 5

3.1 DC Electrical characteristics 5

3.2 AC Electrical characteristics 7

3.3 Analog switch characteristics 8

4 Test circuits 9

5 Package information 12

6 Revision history 17

chanhvinh.com

1 Pin connections and functions

Figure 1. Pin connections and IEC logic symbols

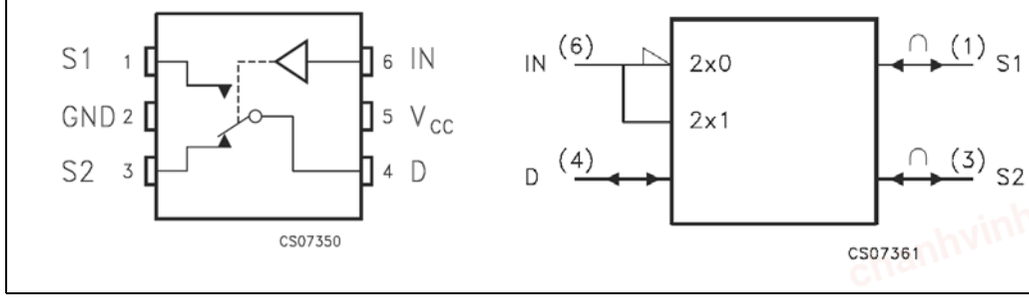

Table 2. Truth table

IN	Switch S1	Switch S2
H	ON	OFF (1)
L	OFF (1)	ON

1. High impedance

Table 3. Pin descriptions

Pin Nº	Symbol	Name and function
1, 3	S1, S2	Independent channels
4	D	Common channels
6	IN	Control
5	V_{CC}	Positive supply voltage
2	GND	Ground (0 V)

Figure 2. Input equivalent circuit

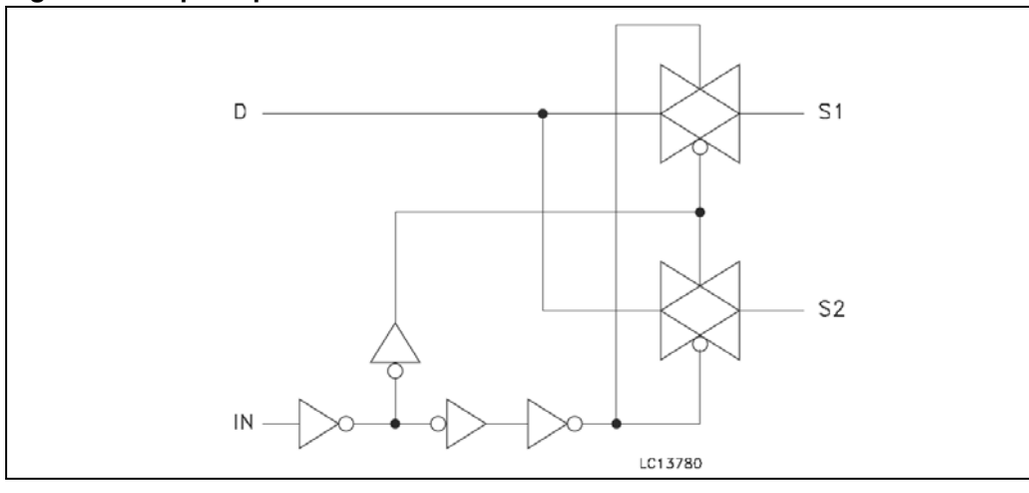

chanhvinh.com

2 Electrical ratings

Stressing the device above the ratings listed in the “Absolute maximum ratings” table may cause permanent damage to the device. These are stress ratings only and operation of the device at these or any other conditions above those indicated in the operating sections of this specification is not implied. Exposure to absolute maximum rating conditions for extended periods may affect device reliability. Refer also to the STMicroelectronics SURE Program and other relevant quality documents.

Table 4. Absolute maximum ratings

Symbol	Parameter	Value	Unit
V_{CC}	Supply voltage	-0.5 to +7.0	V
V_I	DC input voltage	-0.5 to V_{CC} + 0.5	V
V_{IC}	DC control input voltage	-0.5 to V_{CC} + 0.5	V
V_O	DC output voltage	-0.5 to V_{CC} + 0.5	V
I_{IKC}	DC input diode current on control pin (V_{IN} < 0V)	±50	mA
I_{IK}	DC input diode current (V_{IN} < 0V)	±50	mA
I_{OK}	DC output diode current	±20	mA
I_O	DC output current	+128	mA
I_{CC} or I_{GND}	DC V_{CC} or ground current	±100	mA
T_{stg}	Storage temperature	-65 to 150	°C
T_L	Lead temperature (10 s)	300	°C

Table 5. Recommended operating conditions

Symbol	Parameter		Value	Unit
V_{CC}	Supply voltage (1)		1.65 to 4.5	V
V_I	Input voltage		0 to V_{CC}	V
V_{IC}	Control input voltage		0 to 5.5	V
V_O	Output voltage		0 to V_{CC}	V
T_{op}	Operating temperature		-55 to 125	°C
dt/dv	Input rise and fall time control input	V_{CC} = 1.65V to 2.7V	0 to 20	ns/V
		V_{CC} = 3.0 to 4.5V	0 to 10	

1. Truth table guaranteed: 1.2 V to 6.0 V

chanhvinh.com

3 Electrical characteristics

3.1 DC Electrical characteristics

Table 6. DC specifications

Symbol	Parameter	Test conditions		Value							Unit
		Vcc (V)		T_A = 25°C			-40 to 85°C		-55 to 125°C		
				Min.	Typ.	Max.	Min.	Max.	Min.	Max.	
V_{IH}	High level input voltage	1.65-1.95		$0.75V_{CC}$			$0.75V_{CC}$		$0.75V_{CC}$		V
		2.3-2.5		$0.7V_{CC}$			$0.7V_{CC}$		$0.7V_{CC}$		
		2.7-3.6		2			2		2		
V_{IL}	Low level input voltage	1.65-1.95				$0.25V_{CC}$		$0.25V_{CC}$		$0.25V_{CC}$	V
		2.3-2.5				$0.3V_{CC}$		$0.3V_{CC}$		$0.3V_{CC}$	
		2.7-3.6				0.8		0.8		0.8	
R_{ON}	Switch on-resistance	4.5	V_S = 0V I_S = 30mA		4.4	7		7		9	Ω
			V_S = 2.4V I_S = 30mA		4.9	12		12		14.5	
			V_S = 4.5V I_S = 30mA		6.1	15		15		18	
		3.0	V_S = 0V I_S = 100mA		5.2	9		9		11	
			V_S = 3V I_S = 24mA		7.8	20		20		24	
		2.3	V_S = 0V I_S = 8mA		6.5	12		12		14.5	
			V_S = 2.3V I_S = 8mA		9.6	30		30		36	
		1.65	V_S = 0V I_S = 4mA		9.0	20		20		24	
			V_S = 1.65V I_S = 4mA		14	50		50		60	
ΔR_{ON}	On-resistance match between channels	4.5	V_S = 3.15V I_S = 30mA		0.10						Ω
		3.0	V_S = 2.1V I_S = 24mA		0.10						
		2.3	V_S = 1.6V I_S = 8mA		0.20						
		1.65	V_S = 1.15V I_S = 4mA		0.35						

chanhvinh.com

Table 6. DC specifications (continued)

Symbol	Parameter	Test conditions		Value							Unit
		Vcc (V)		T_A = 25°C			-40 to 85°C		-55 to 125°C		
				Min.	Typ.	Max.	Min.	Max.	Min.	Max.	
R_{FLAT}	On-resistance flatness	5.0	V_S = 0V to V_{CC} I_S = 30mA		3						Ω
		3.3	V_S = 0V to V_{CC} I_S = 24mA		6						
		2.5	V_S = 0V to V_{CC} I_S = 8mA		14						
		1.8	V_S = 0V to V_{CC} I_S = 4mA		80						
I_{OFF}	OFF state leakage current	1.65-195	V_S = 0 to V_{CC}		±0.05	±0.1		±1		±10	µA
I_{IN}	Input leakage current	0 - 5.5	V_{IN} = 0 to 5.5V		±0.05	±0.1		±1		±10	µA
I_{CC}	Quiescent supply current	1.65 - 4.3	V_{IN} = V_{CC} or GND			1		1		10	µA

chanhvinh.com

3.2 AC Electrical characteristics

C_L = 50 pF, R_L = 500 Ω

Table 7. AC specification

Symbol	Parameter	Test conditions		Value							Unit
		Vcc (V)		T_A = 25°C			-40 to 85°C		-55 to 125°C		
				Min.	Typ.	Max.	Min.	Max.	Min.	Max.	
t_{LH}, t_{HL}	Propagation delay	1.65-1.95	V_I = Open								ns
		2.3-2.7				1.2		1.2		1.8	
		3.0-3.3				0.8		0.8		1.2	
		4.5-5.5				0.3		0.3		0.5	
t_{PZH}, t_{PZL}	Output enable time (D to Sn)	1.65-1.95		7		15	7	20	7	27	ns
		2.3-2.7		3.5		11	3.5	14	3.5	17	
		3.0-3.3		2.5		7	2.5	7.6	2.5	9	
		4.5-5.5		1.7		5.2	1.7	5.7	1.7	7	
t_{PLZ}, t_{PHZ}	Output disable time (D to Sn)	1.65-1.95		3		10	3	13	3	16	ns
		2.3-2.7		2		7	2	7.5	2	9	
		3.0-3.3		1.5		5	1.5	5.3	1.5	6.5	
		4.5-5.5		1.7		3.5	1.7	3.8	1.7	5	
t_D	Break-before-make time delay	1.65-5.5		0.5			0.5		0.5		ns
Q	Charge injection	5			23						pC
		3.3			19						

chanhvinh.com

3.3 Analog switch characteristics

C_L = 5 pF, R_L = 50 Ω, T_A = 25 °C

Table 8. Analog switch characteristics

Symbol	Parameter	Test conditions		Value							Unit
		Vcc (V)		T_A = 25°C			-40 to 85°C		-55 to 125°C		
				Min.	Typ.	Max.	Min.	Max.	Min.	Max.	
OIRR	Off isolation	1.65-5.5	R_L = 50Ω f = 10MHz		-57						dB
Xtalk	Crosstalk	1.65-5.5	R_L = 50Ω f = 10MHz		-54						dB
BW	-3dB bandwidth	1.65-5.5	R_L = 50Ω		250						MHz
C_{IN}	Control pin input capacitance				5						pF
C_{Sn}	Sn port capacitance	5.0	f = 1MHz		13						
C_D	D port capacitance when switch is enabled	5.0	f = 1MHz		21						

chanhvinh.com

4 Test circuits

Figure 3. On-resistance

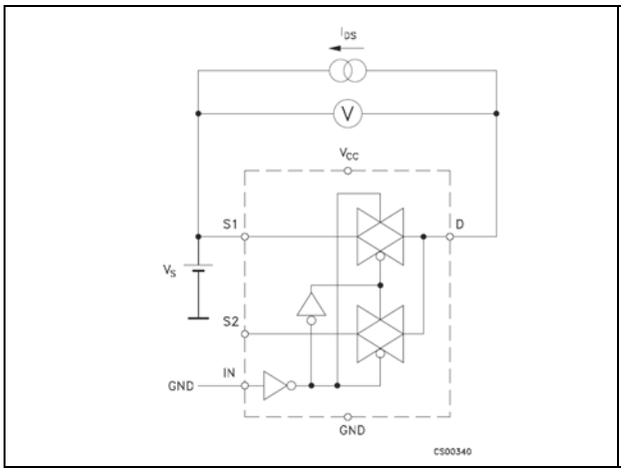

Figure 4. Bandwidth

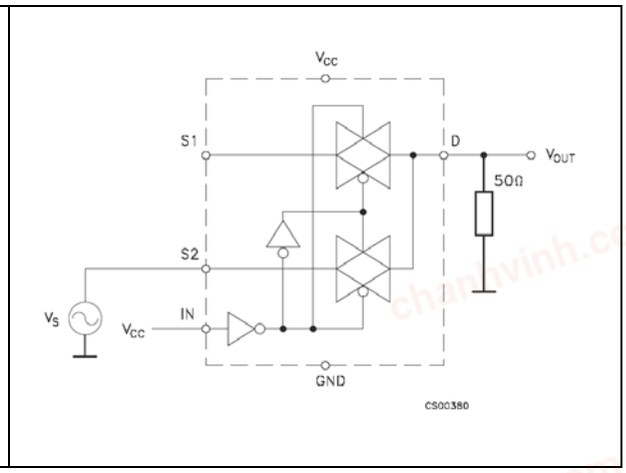

Figure 5. OFF leakage

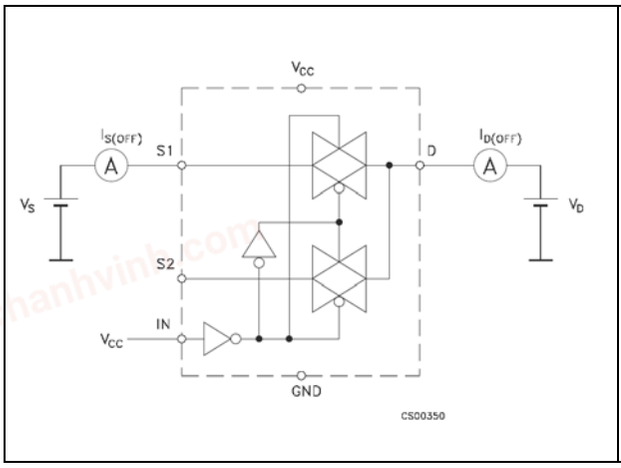

Figure 6. Channel-to-channel crosstalk

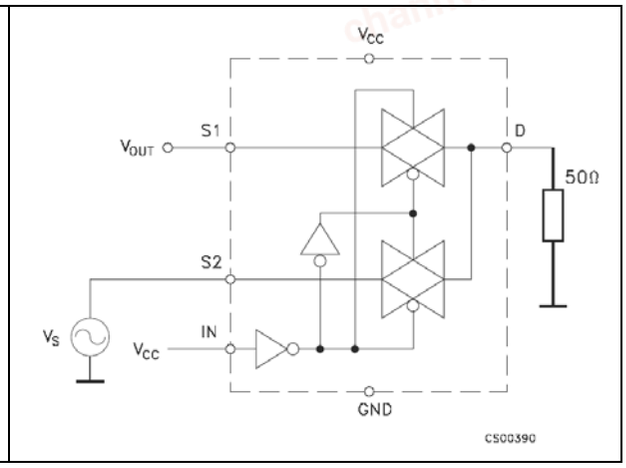

Figure 7. OFF isolation

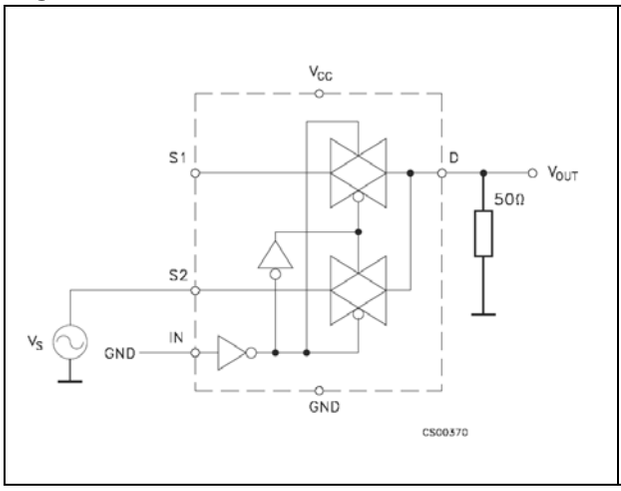

Figure 8. ON leakage

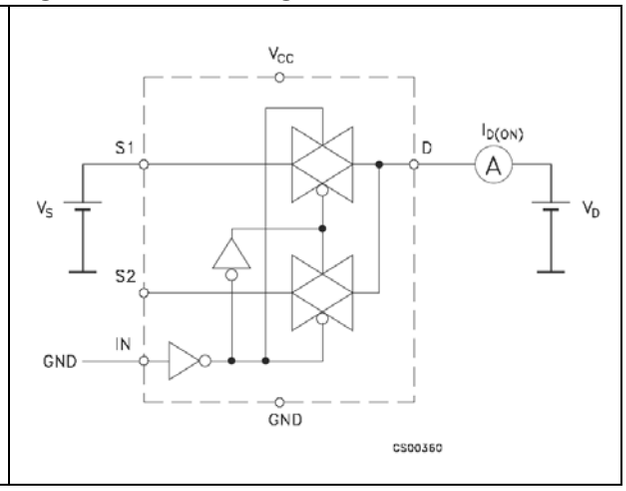

chanhvinh.com

Figure 9. Test circuit

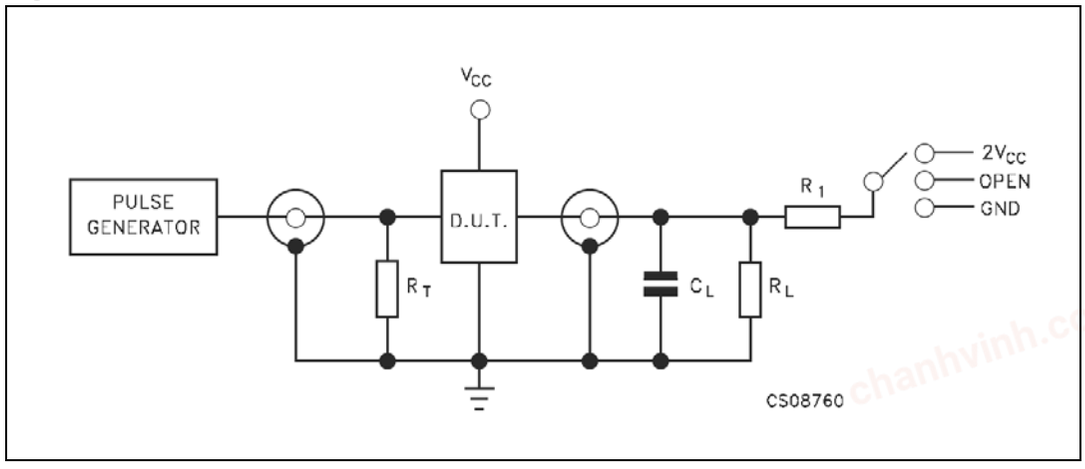

Table 9. Test circuit

Test	Switch
t_{PLH}, t_{PHL}	Open
t_{PZL}, t_{PLZ}	V_{CC}
t_{PZH}, t_{PHZ}	GND

Note: C_L = 5/35 pF or equivalent: (includes jig capacitance)
R_L = 50 Ω or equivalent
R_T = Z_{OUT} of pulse generator (typically 50 Ω)

Figure 10. Break-before-make time delay

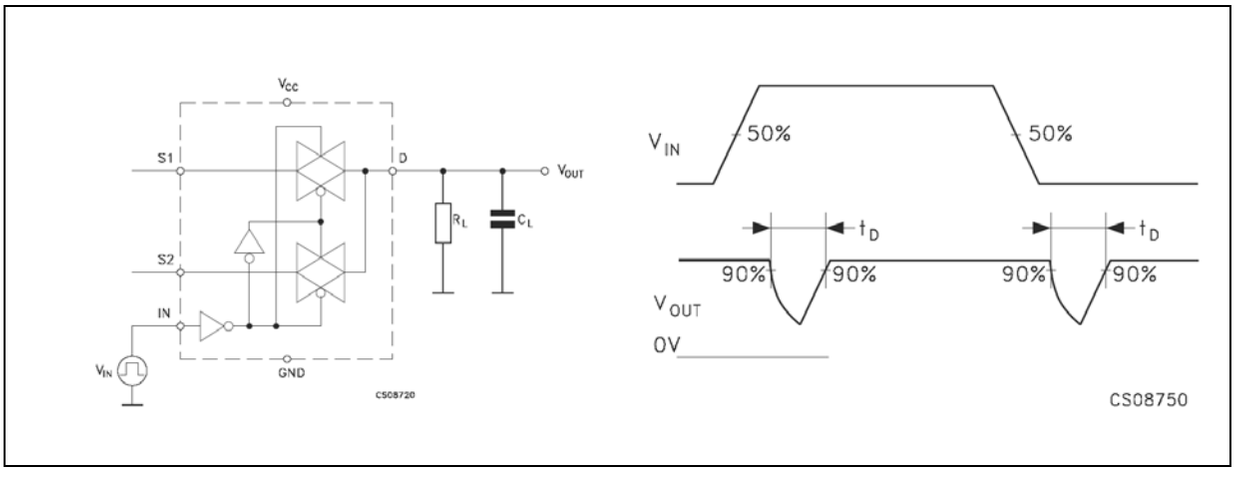

chanhvinh.com

Figure 11. Switching time and charge injection

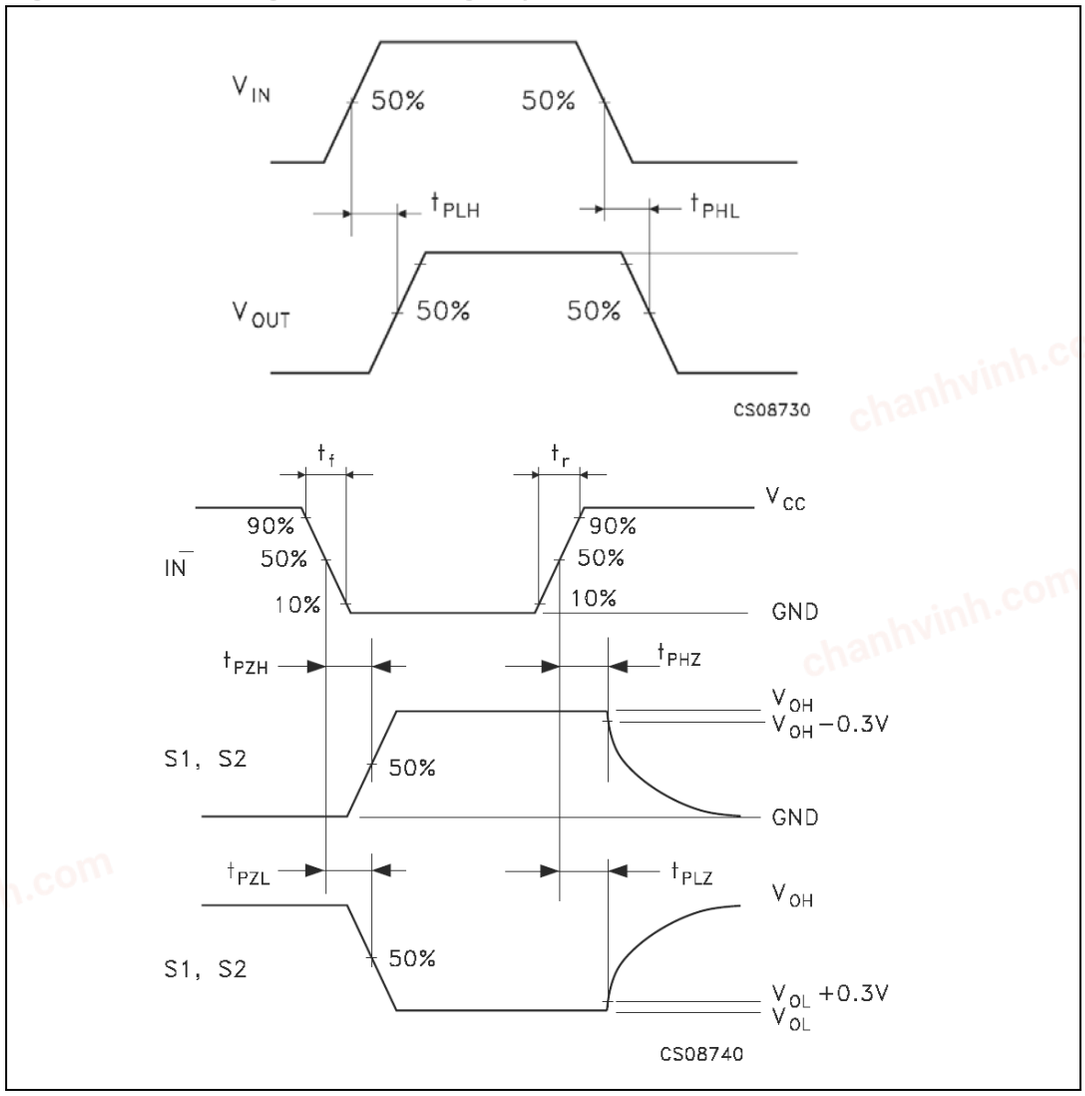

Figure 12. Charge injection (V_{GEN} = 0 V, R_{GEN} = 0 Ω, R_L = 1 MΩ, C_L = 100 pF)

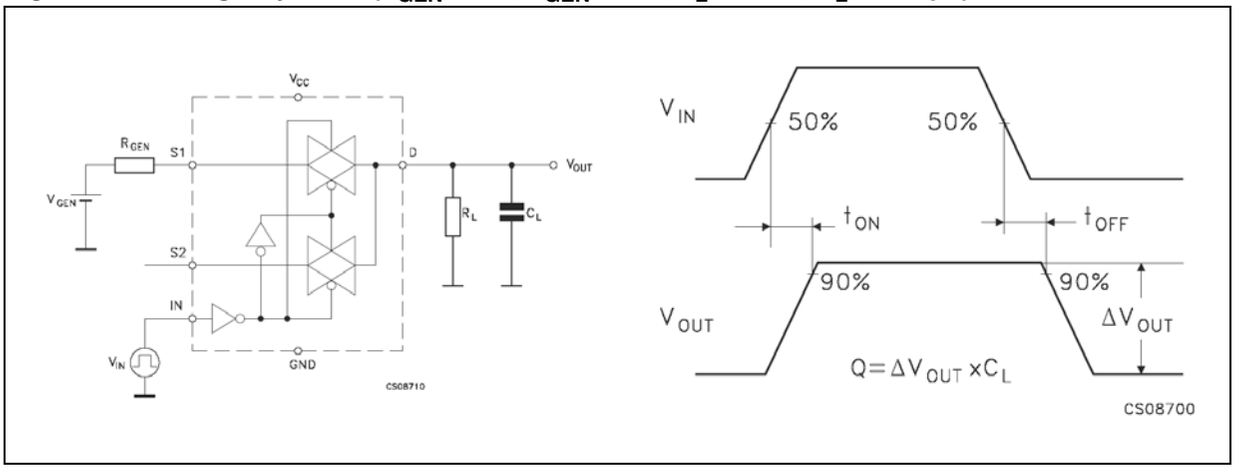

chanhvinh.com

5 Package information

In order to meet environmental requirements, ST offers these devices in different grades of ECOPACK® packages, depending on their level of environmental compliance. ECOPACK® specifications, grade definitions and product status are available at: www.st.com.
ECOPACK is an ST trademark.

chanhvinh.com

Table 10. SOT323-6L mechanical data

Dim.	mm.			inch		
	Min.	Typ.	Max.	Min.	Typ.	Max.
A	0.80		1.10	31.5		43.3
A1	0.00		0.10	0.0		3.9
A2	0.80		1.00	31.5		39.4
b	0.15		0.30	5.9		11.8
C	0.10		0.18	3.9		7.1
D	1.80		2.20	70.9		86.6
E	1.80		2.40	70.9		94.5
E1	1.15		1.35	45.3		53.1
e		0.65			25.6	
e1		1.3			51.2	
L	0.10		0.30	3.9		11.8

Figure 13. Package dimensions

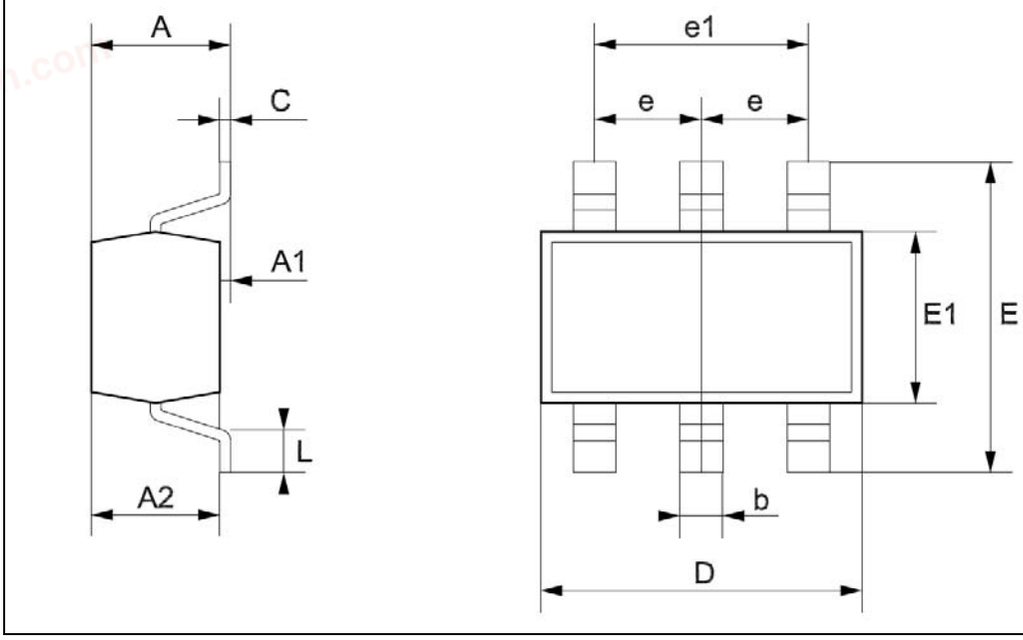

chanhvinh.com

Table 11. SOT323-6L footprint recommendation

Dim.	mm.	inch
A	2.88	0.113
B	0.78	0.031
C	0.36	0.014
D	0.65	0.026
E	1.05	0.041
F	1.65	0.065

Figure 14. SOT323-6L footprint recommendation

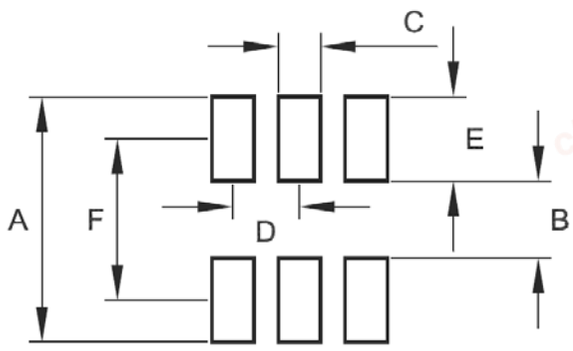

chanhvinh.com

Table 12. SOT323-6L tape information

Dim	mm.	inch
D	1.50 +0.1/0	0.059 +0.004/0
E	1.75 ±0.1	0.069 ±0.004
Po	4.00 ±0.1	0.157 ±0.004
T max.	0.40	0.016
D1 min.	1	0.039
F	3.5 ±0.05	0.138 ±0.002
K max.	2.40	0.094
P2	2.00 ±0.05	0.079 ±0.002
R	25	0.984
W	8.00 ±0.30	0.315 ±0.012
P1	4.00	0.157
Ao, Bo, Ko	0.05 min to 0.50 max	0.002 min to 0.020 max

Figure 15. SOT323-6L tape information

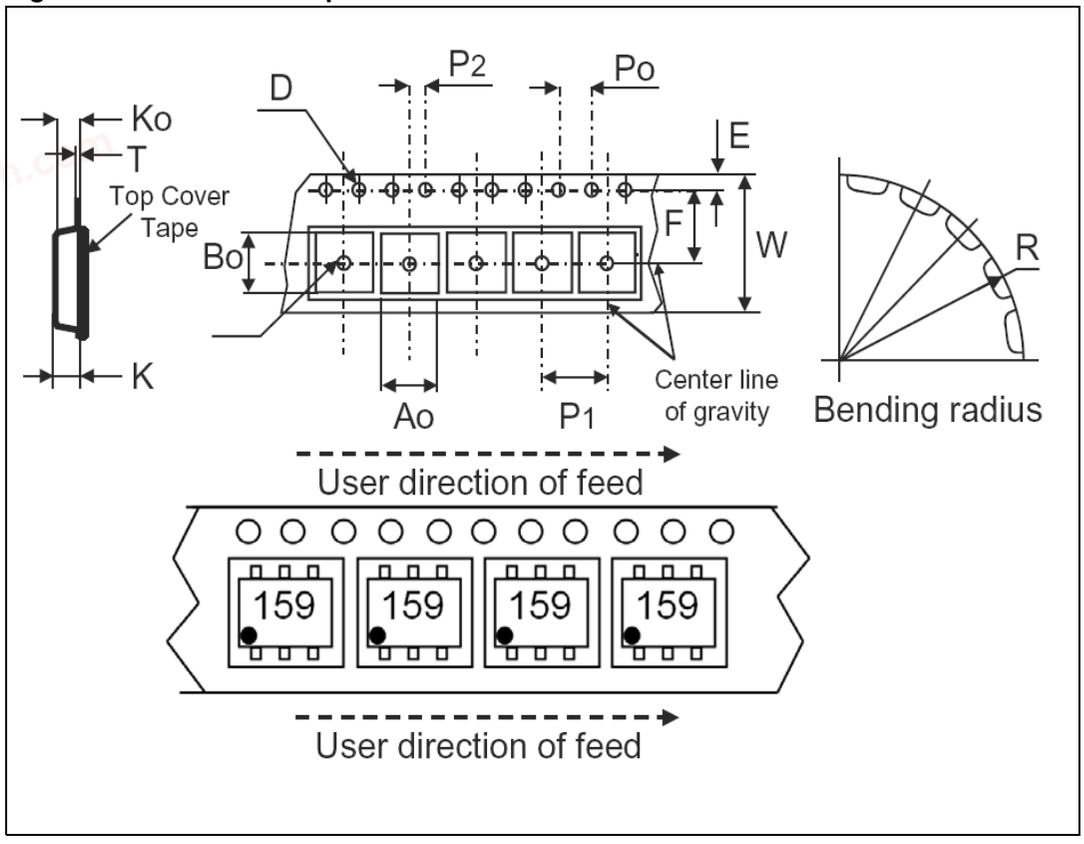

chanhvinh.com

Table 13. SOT323-6L reel information

Dim	mm.	inch
Tape size	8.0 ±0.30	0.315 ±0.012
A max.	180.0	7.086
B min.	1.5	0.059
C	13.0 ±0.20	0.512 ±0.008
D min.	20.2	0.795
N min.	60	2.362
G	8.4 +2/-0	0.319 +0.079/-0
T max.	14.4	0.567

Figure 16. SOT323-6L reel information

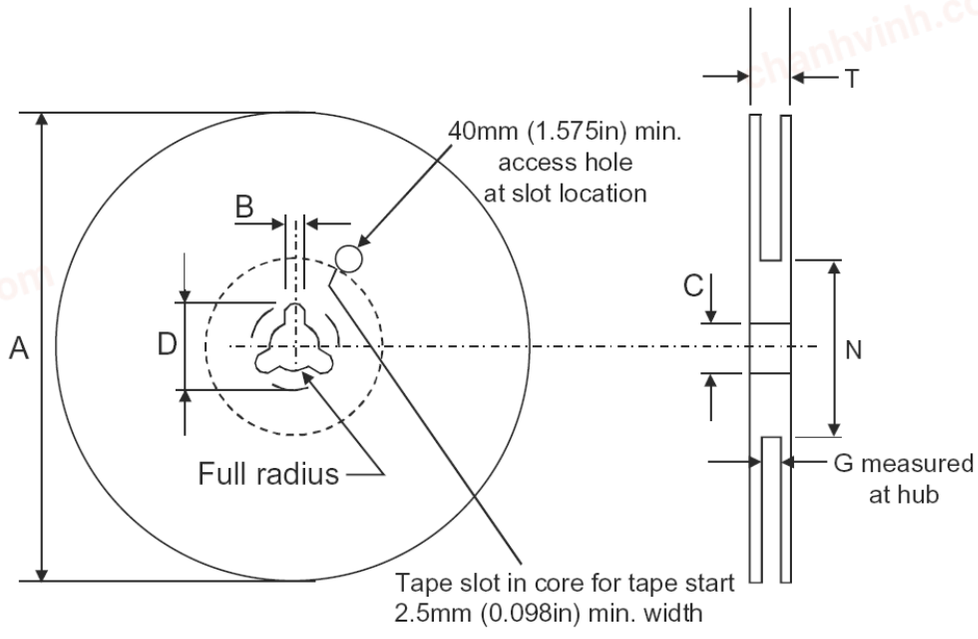

chanhvinh.com

6 Revision history

Table 14. Document revision history

Date	Revision	Changes
02-Sep-2002	1	Initial release.
19-Apr-2010	2	Document reformatted. In the *Features* list on the coverpage, updated the “Latch-up performance exceeds” value from 300 mA to 150 mA. Minor text changes throughout the document. Replaced Order codes table on the coverpage with *Table 1: Device summary*. Added ECOPACK® statement in *Section 5: Package information*.

chanhvinh.com

Please Read Carefully:

Information in this document is provided solely in connection with ST products. STMicroelectronics NV and its subsidiaries (“ST”) reserve the right to make changes, corrections, modifications or improvements, to this document, and the products and services described herein at any time, without notice.

All ST products are sold pursuant to ST’s terms and conditions of sale.

Purchasers are solely responsible for the choice, selection and use of the ST products and services described herein, and ST assumes no liability whatsoever relating to the choice, selection or use of the ST products and services described herein.

No license, express or implied, by estoppel or otherwise, to any intellectual property rights is granted under this document. If any part of this document refers to any third party products or services it shall not be deemed a license grant by ST for the use of such third party products or services, or any intellectual property contained therein or considered as a warranty covering the use in any manner whatsoever of such third party products or services or any intellectual property contained therein.

UNLESS OTHERWISE SET FORTH IN ST’S TERMS AND CONDITIONS OF SALE ST DISCLAIMS ANY EXPRESS OR IMPLIED WARRANTY WITH RESPECT TO THE USE AND/OR SALE OF ST PRODUCTS INCLUDING WITHOUT LIMITATION IMPLIED WARRANTIES OF MERCHANTABILITY, FITNESS FOR A PARTICULAR PURPOSE (AND THEIR EQUIVALENTS UNDER THE LAWS OF ANY JURISDICTION), OR INFRINGEMENT OF ANY PATENT, COPYRIGHT OR OTHER INTELLECTUAL PROPERTY RIGHT.

UNLESS EXPRESSLY APPROVED IN WRITING BY AN AUTHORIZED ST REPRESENTATIVE, ST PRODUCTS ARE NOT RECOMMENDED, AUTHORIZED OR WARRANTED FOR USE IN MILITARY, AIR CRAFT, SPACE, LIFE SAVING, OR LIFE SUSTAINING APPLICATIONS, NOR IN PRODUCTS OR SYSTEMS WHERE FAILURE OR MALFUNCTION MAY RESULT IN PERSONAL INJURY, DEATH, OR SEVERE PROPERTY OR ENVIRONMENTAL DAMAGE. ST PRODUCTS WHICH ARE NOT SPECIFIED AS "AUTOMOTIVE GRADE" MAY ONLY BE USED IN AUTOMOTIVE APPLICATIONS AT USER’S OWN RISK.

Resale of ST products with provisions different from the statements and/or technical features set forth in this document shall immediately void any warranty granted by ST for the ST product or service described herein and shall not create or extend in any manner whatsoever, any liability of ST.

ST and the ST logo are trademarks or registered trademarks of ST in various countries.

Information in this document supersedes and replaces all information previously supplied.

The ST logo is a registered trademark of STMicroelectronics. All other names are the property of their respective owners.

© 2010 STMicroelectronics - All rights reserved

STMicroelectronics group of companies

Australia - Belgium - Brazil - Canada - China - Czech Republic - Finland - France - Germany - Hong Kong - India - Israel - Italy - Japan - Malaysia - Malta - Morocco - Philippines - Singapore - Spain - Sweden - Switzerland - United Kingdom - United States of America

www.st.com