chanhvinh.com

life.augmented

STEVAL-ISA204V1

Data brief

100W 5V/20A active clamp forward converter based on PM8804 for telecom systems



Features

- DC-DC forward converter based on PM8804
- Input voltage range: 42 – 56 V_{DC}
- Switching frequency: 250 kHz
- Output:
  - Power: 100 W
  - Voltage: 5 V_{DC}
  - Current: up to 20 A
- Peak efficiency > 94%
- Open circuit protection
- RoHS complaint
- WEEE compliant

Description

The STEVAL-ISA204V1 evaluation board is designed to demonstrate high efficiency DC-DC conversion, able to output 100 W (5 V/20 A) from 42 to 56 V DC input, which is especially suitable for telecom applications.

The power conversion stage is based on an active clamp forward topology managed by a PM8804 PWM controller featuring all the integrated circuitry necessary for a compact and efficient 48 V converter. The highly configurable controller includes a programmable oscillator for switching frequency regulation up to 1 Mhz, adjustable slope compensation, dual complementary low-side drivers with programmable dead time, programmable soft start, soft turn off and a programmable current sense blanking time.

Product summary	
100W 5V/20A forward converter based on PM8804 PWM controller	STEVAL-ISA204V1
PWM peak current mode controller for PoE and telecom systems	PM8804
Application	Server & Telecom Power

chanhvinh.com

1 Application overview

The STEVAL-ISA204V1 represents a forward converter application with synchronous rectification for 48 V auxiliary power supplies destined for server and telecommunications equipment. The board can supply an output current up to 20 A.

The PM8804 integrates two MOSFET drivers with up to 1 A peak sink current capability. The GAT1 signal drives the main switching MOSFET, while the GAT2 signal controls a P-channel MOSFET referred to PGND in active clamp forward topology.

The synchronous rectification stage can be paralleled by mounting two further STL160N4F7 N-channel MOSFETs (Q2 and Q8), which can significantly reduce the operating temperatures of the mounted synchronous rectifier MOSFETs.

Figure 1. STEVAL-ISA204V1 block diagram

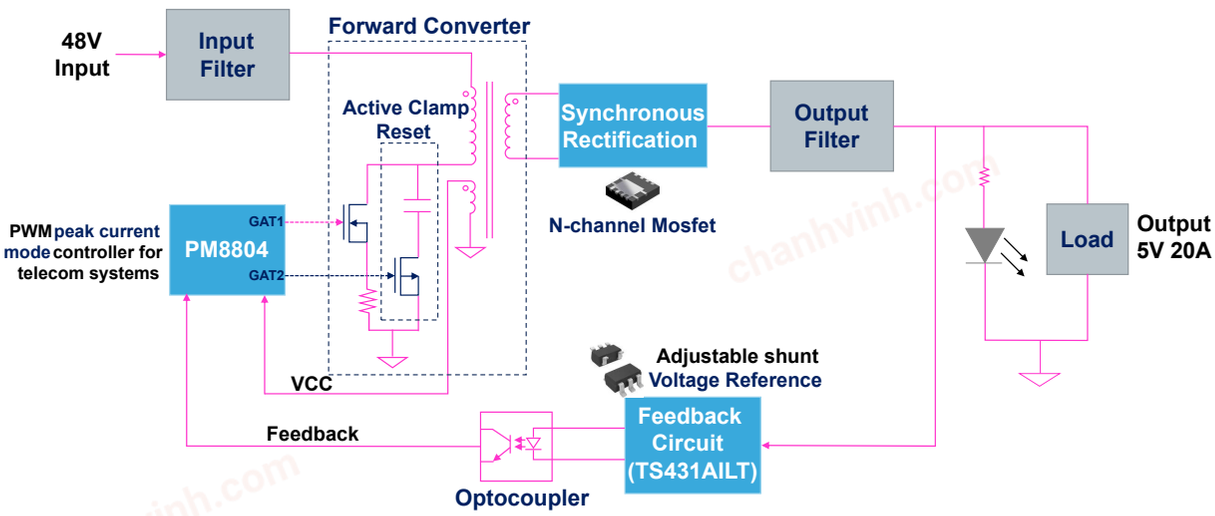

RELATED LINKS

Visit the Server & Telecom application page for more information on relevant power supply and conversion strategies

chanhvinh.com

2 Electrical and efficiency characteristics

Table 1. Electrical specifications of STEVAL-ISA204V1

Electrical specifications	Range / Value
Input voltage range	42 – 56 V DC
Output voltage	5 V
Output current	20 A
Total output power	100 W
Maximum efficiency	> 94 %

The STEVAL-ISA204V1 evaluation board attains a maximum efficiency of 94%. The figure below shows the efficiency of the board at different input voltages and load conditions.

Figure 2. Efficiency at different load conditions

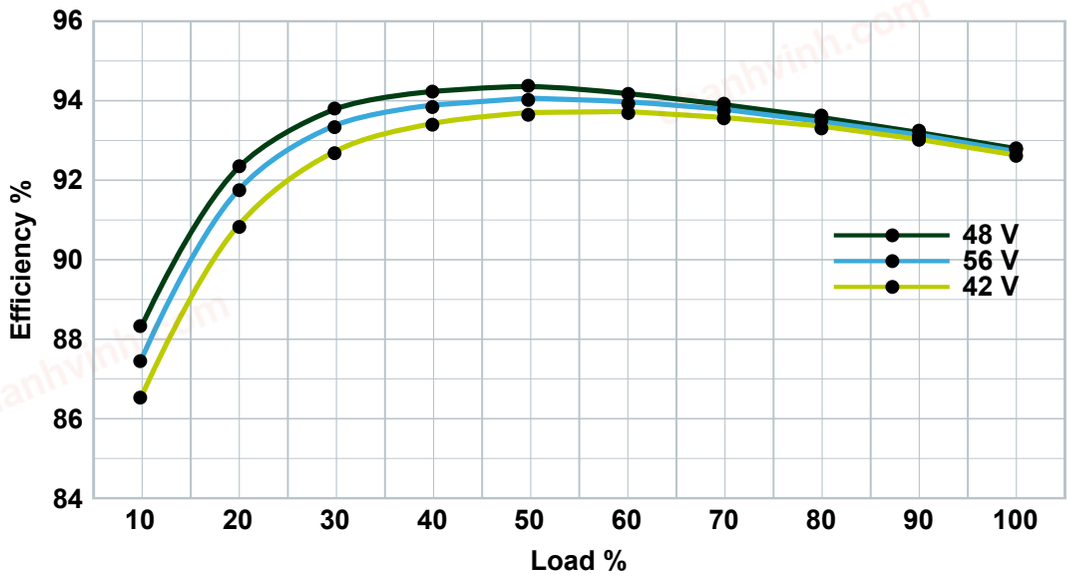

Table 2. STEVAL-ISA204V1 MOSFET temperatures at maximum load (20 A)

Optional Q2 and Q8	Synchronous rectifier Q1	Synchronous rectifier Q5	Forward Converter Q4
unmounted	84 °C	94.4°C	74 °C
mounted	74 °C	77.8 °C	73 °C

chanhvinh.com

3 Board layout

Figure 3. **STEVAL-ISA204V1 top layer**

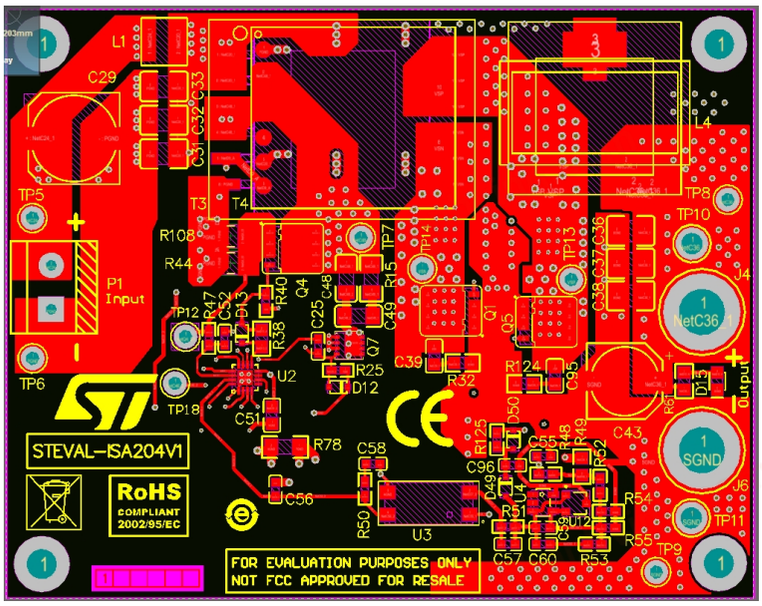

Figure 4. **STEVAL-ISA204V1 bottom layer**

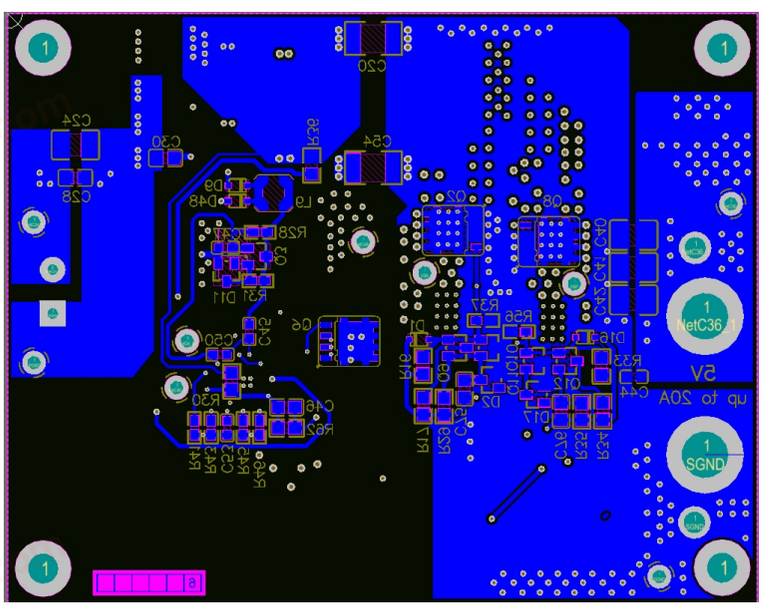

chanhvinh.com

4 Schematic diagram

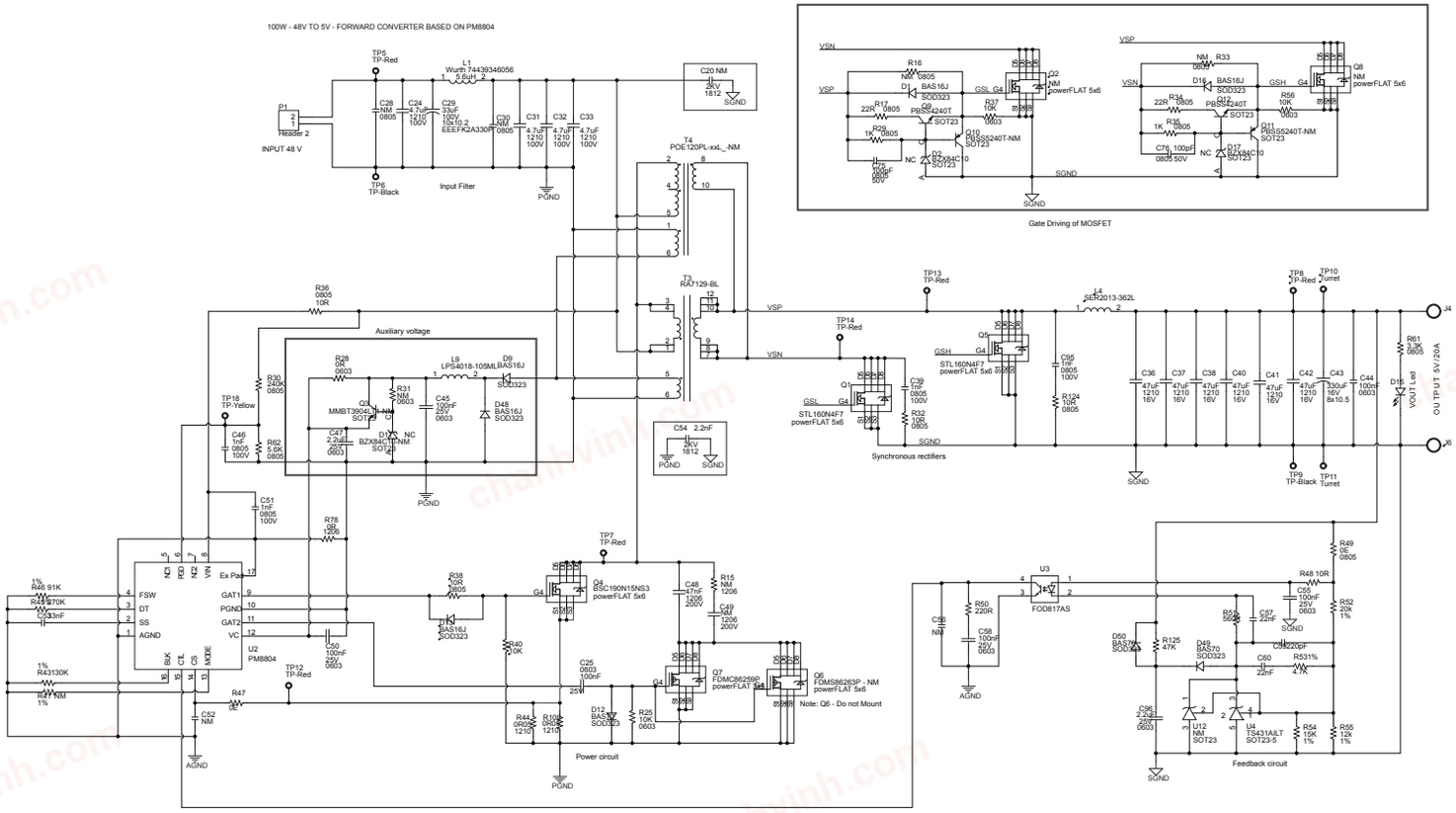

chanhvinh.com

Revision history

Table 3. **Document revision history**

Date	Version	Changes
14-Jun-2019	1	Initial release.

chanhvinh.com

chanhvinh.com

IMPORTANT NOTICE – PLEASE READ CAREFULLY

STMicroelectronics NV and its subsidiaries (“ST”) reserve the right to make changes, corrections, enhancements, modifications, and improvements to ST products and/or to this document at any time without notice. Purchasers should obtain the latest relevant information on ST products before placing orders. ST products are sold pursuant to ST’s terms and conditions of sale in place at the time of order acknowledgement.

Purchasers are solely responsible for the choice, selection, and use of ST products and ST assumes no liability for application assistance or the design of Purchasers’ products.

No license, express or implied, to any intellectual property right is granted by ST herein.

Resale of ST products with provisions different from the information set forth herein shall void any warranty granted by ST for such product.

ST and the ST logo are trademarks of ST. For additional information about ST trademarks, please refer to www.st.com/trademarks. All other product or service names are the property of their respective owners.

Information in this document supersedes and replaces information previously supplied in any prior versions of this document.

© 2019 STMicroelectronics – All rights reserved

chanhvinh.com
chanhvinh.com
chanhvinh.com
chanhvinh.com
chanhvinh.com