chanhvinh.com

STEVAL-CTM010V1

Data brief

1.5 kW dual motor drive with digital PFC based on SLLIMM™ IPMs and STM32F3

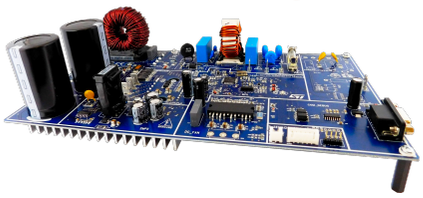

Product summary	
1.5 kW dual motor drive with digital PFC based on SLLIMM™ IPMs and STM32F3	STEVAL-CTM010V1
Mainstream mixed signal MCUs ARM® Cortex®-M4 core with DSP and FPU	STM32F303RB
600 V, 30 A dual Interleave Boost Ultrafast Diode	STTH30AC06C
Trench gate field-stop IGBT, HB series 650 V, 20 A high speed	STGWT20H65FB
STGIB10CH60TS-L SLLIMM™ 2nd series IPM	STGIB10CH60TS-L
SLLIMM nano 2nd series IPM, 3 A, 600 V, 3-phase IGBT inverter bridge	STGIPQ3H60T-HZ

Features

Features

- Input voltage: 230 V_{AC} 50 Hz / 60 Hz
- Max. power: up to 2 kW
- PFC topology: digital control, boost single stage
- PFC protections: overcurrent, overvoltage, and undervoltage lockout
- Inrush current limiter based on overvoltage protected AC switch
- Motor 1 stage:
  - STGIB10CH60TS-L, SLLIMM series IPM 15 A, 600 V, 3-phase IGBT inverter bridge
  - Max. current: up to 10 A, 0-to-peak (current sensing network threshold)
  - 1-, 2-, and 3-shunt resistors for current sensing
  - Protections: overcurrent, overtemperature, undervoltage lockout
- Motor 2 stage:
  - STGIPQ3H60T-HZ SLLIMM nano series IPM, 3 A, 600 V, 3-phase IGBT inverter bridge
  - Max. power: 60 W (no heatsink)
  - Max. current: up to 1 A, 0-to-peak (current sensor network threshold)
  - 1 shunt resistor for current sensing
  - Protections: overcurrent, overtemperature, undervoltage lockout
- Centralized driving (motor 1, motor 2, PFC) from single STM32F303RB MCU based on ARM Cortex-M4 core with DSP and FPU
- WEEE and RoHS compliant

Description

The STEVAL-CTM010V1 board embeds two sensorless 3-phase motor drives, plus a single stage digital PFC boost topology, all controlled by the STM32F303RB ARM based microcontroller. The ST FOC MC SDK firmware library enables this complete hardware and software solution, featuring FOC dual motor sensorless and PFC CCM mode. The inverter stages are based on SLLIMM™ IPM series of intelligent power modules for compact, high-performance AC motor drives in a simple, rugged design. It combines new ST proprietary driver ICs with an improved short-circuit rugged trench gate field-stop (TFS) IGBT, making it ideal for motor drives operating up to 20 kHz in hard-switching circuits.

The PFC section is based on the STTH30AC06C ultra-fast high voltage rectifier and STGWT20H65FB trench gate field-stop IGBT.

The board embeds the 2nd generation SLLIMM STGIB10CH60TS-L and STGIPQ3H60T-HZ intelligent power modules, which are tailored to drive motors for compressors and fans in outdoor units. The STEVAL-CTM010V1 is therefore ideal for evaluating room air conditioner solutions able to meet new efficiency standards requiring digital PFCs, and any single or dual motor application with power factor correction.

chanhvinh.com

1 Schematic diagrams

Figure 1. **STEVAL-CTM010V1 block diagram**

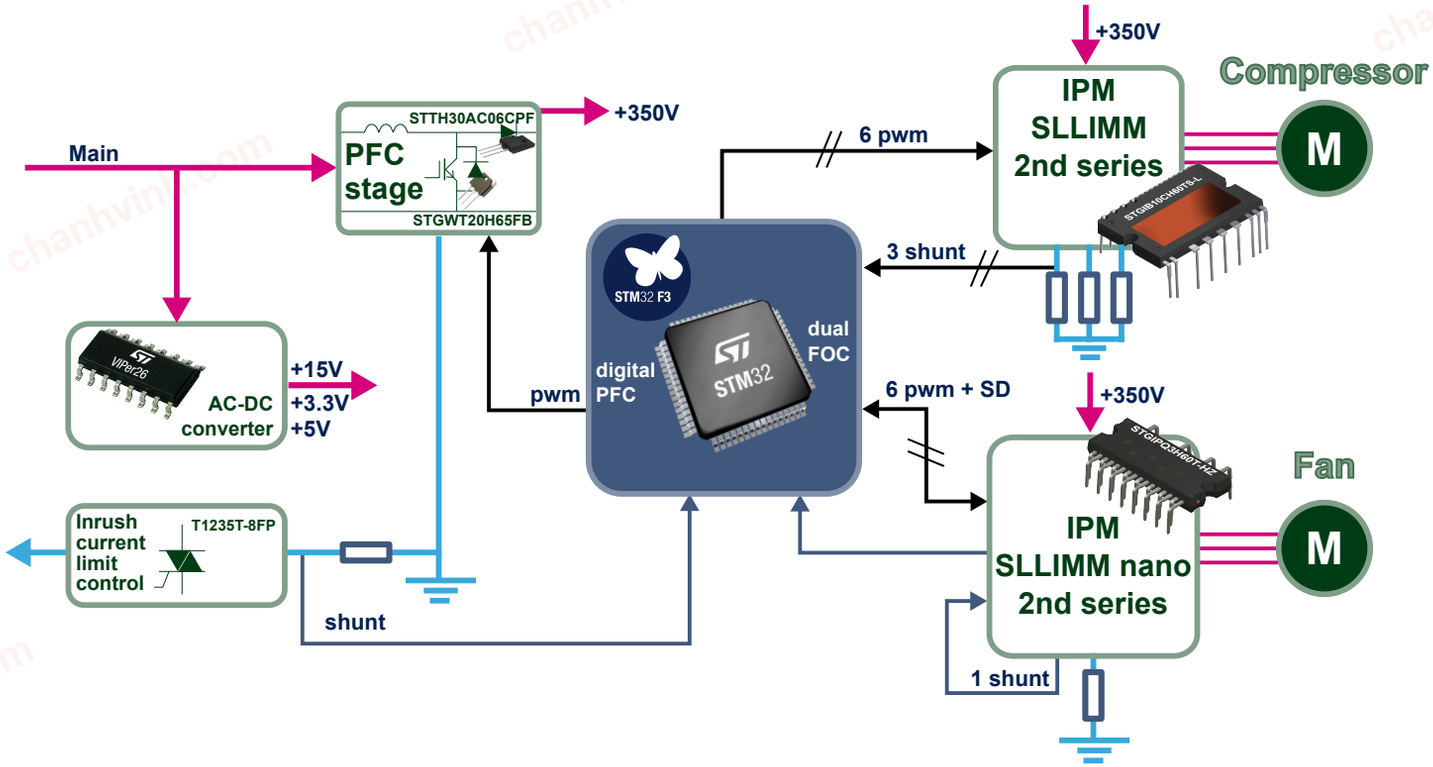

chanhvinh.com

Figure 2. STEVAL-CTM010V1 schematic diagram - SMPS

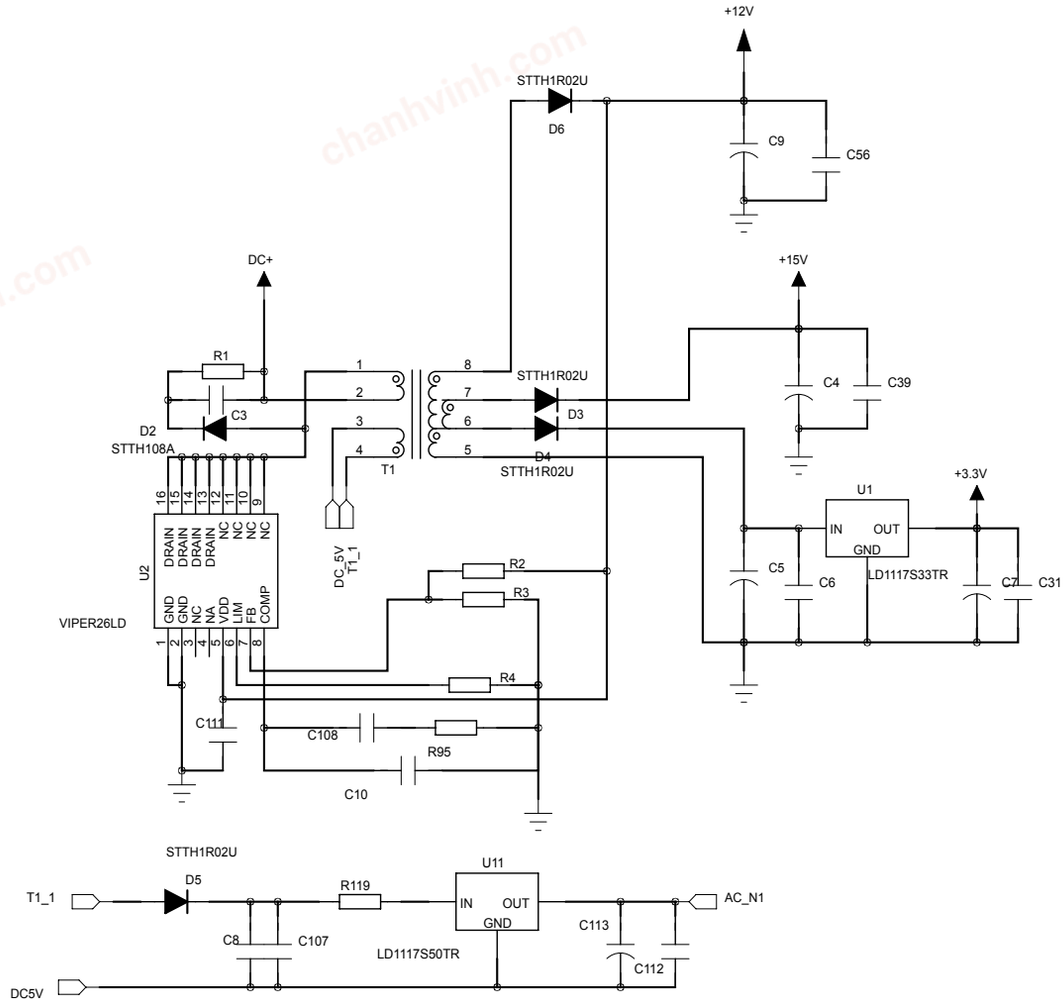

chanhvinh.com

Figure 3. STEVAL-CTM010V1 schematic diagram - EMI and PFC

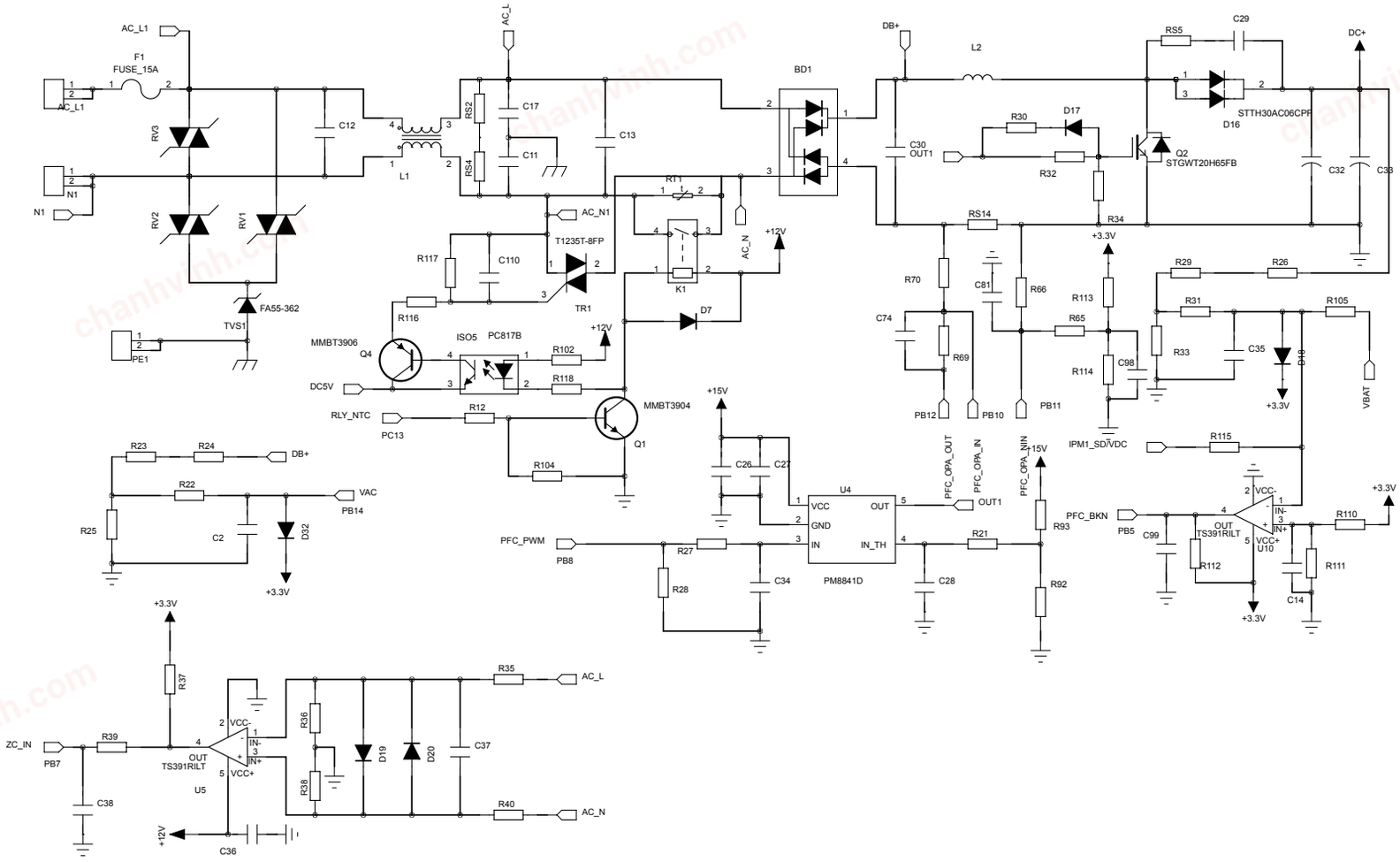

chanhvinh.com

Figure 4. STEVAL-CTM010V1 schematic diagram - IPM1

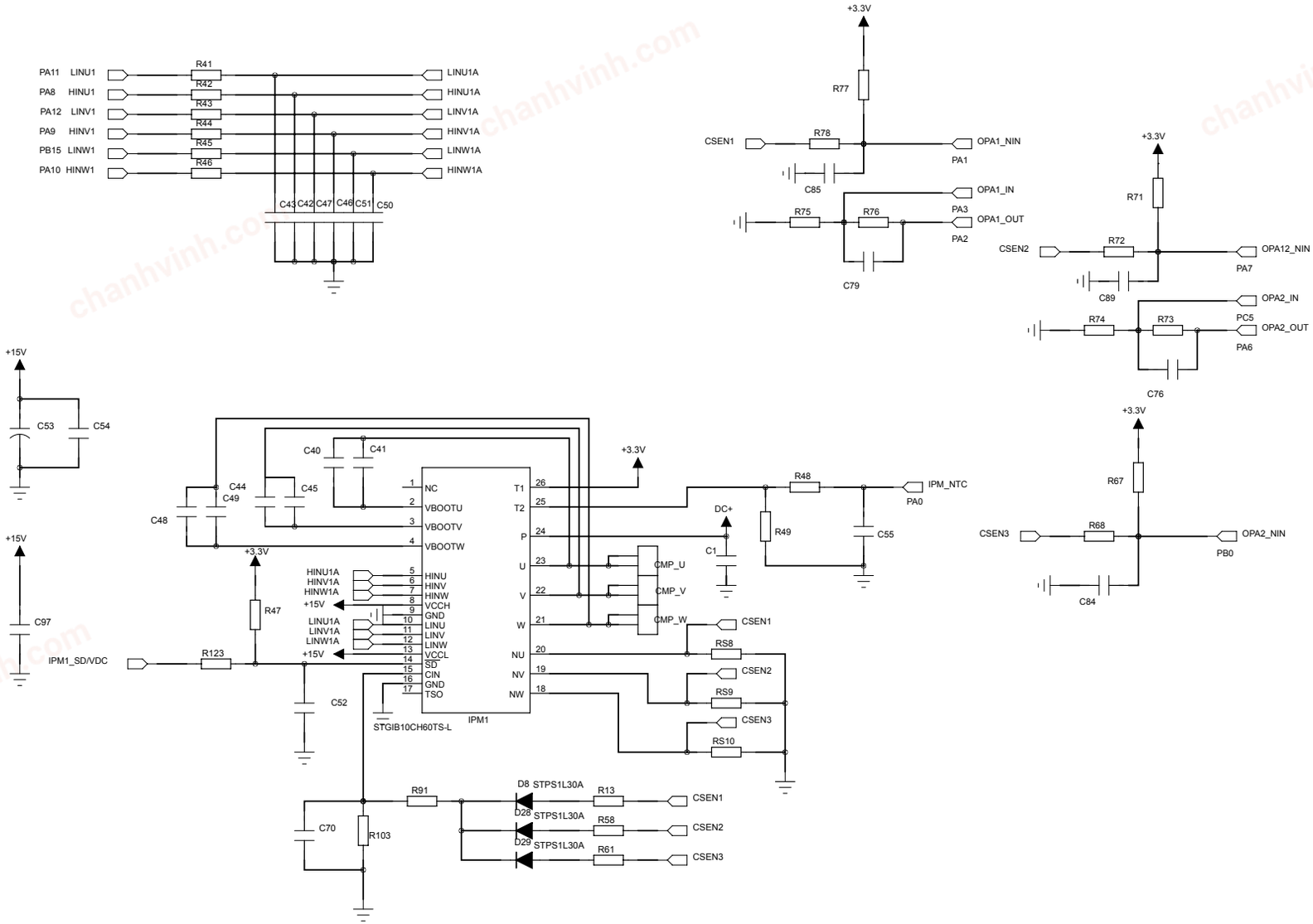

chanhvinh.com

Figure 5. **STEVAL-CTM010V1 schematic diagram - IPM2**

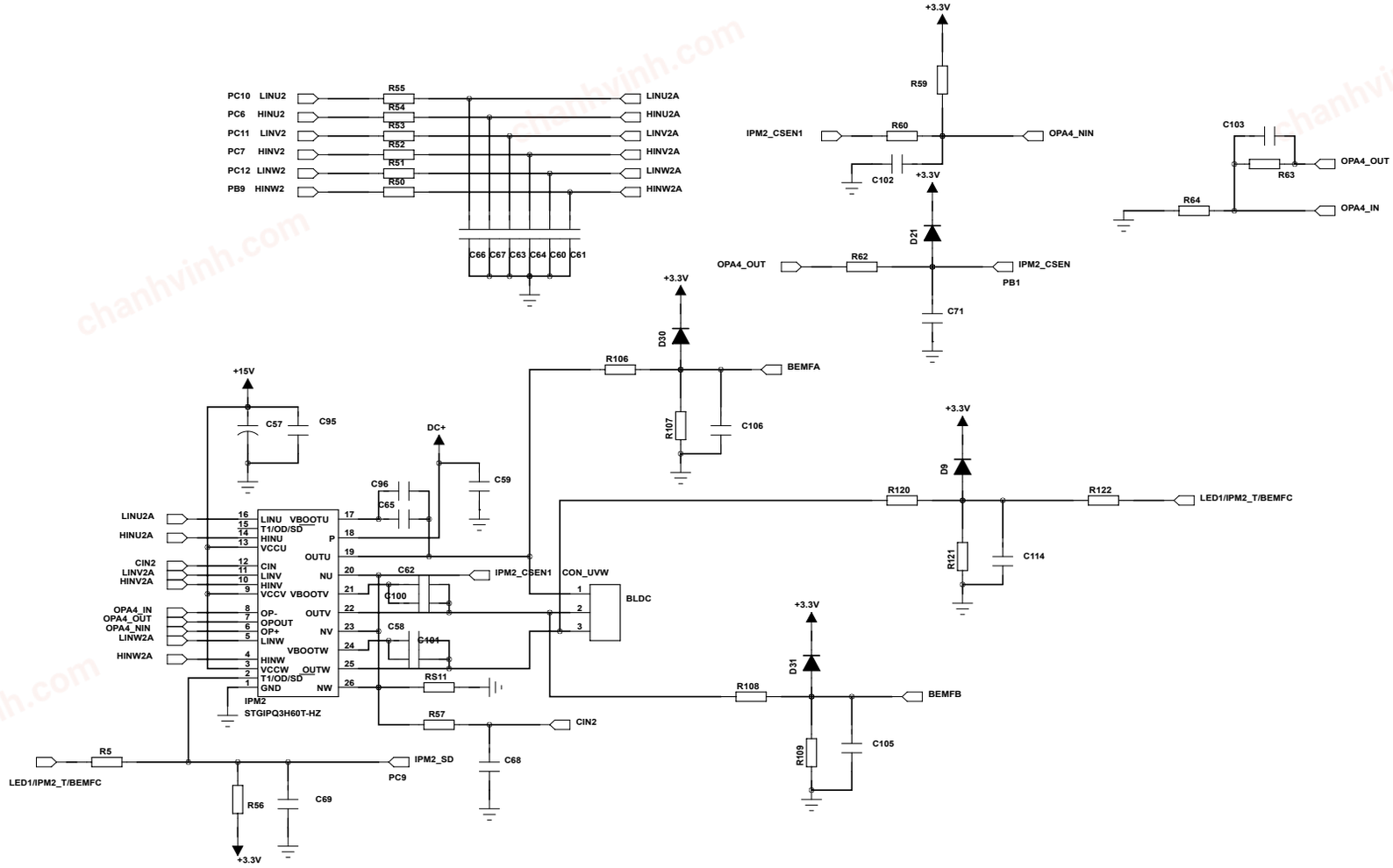

chanhvinh.com

Figure 6. STEVAL-CTM010V1 schematic diagram - MCU

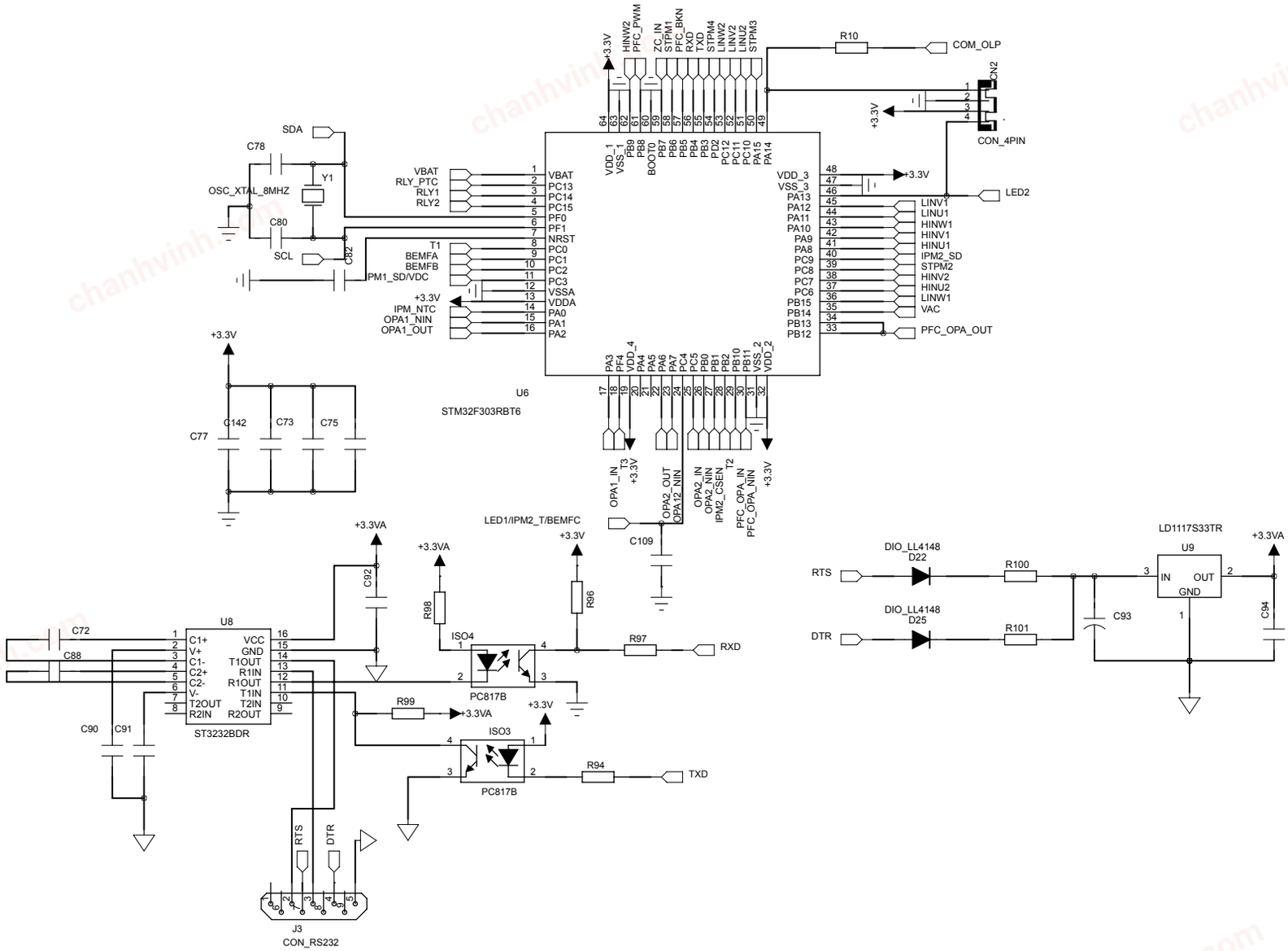

chanhvinh.com

Figure 7. **STEVAL-CTM010V1 schematic diagram - miscellaneous**

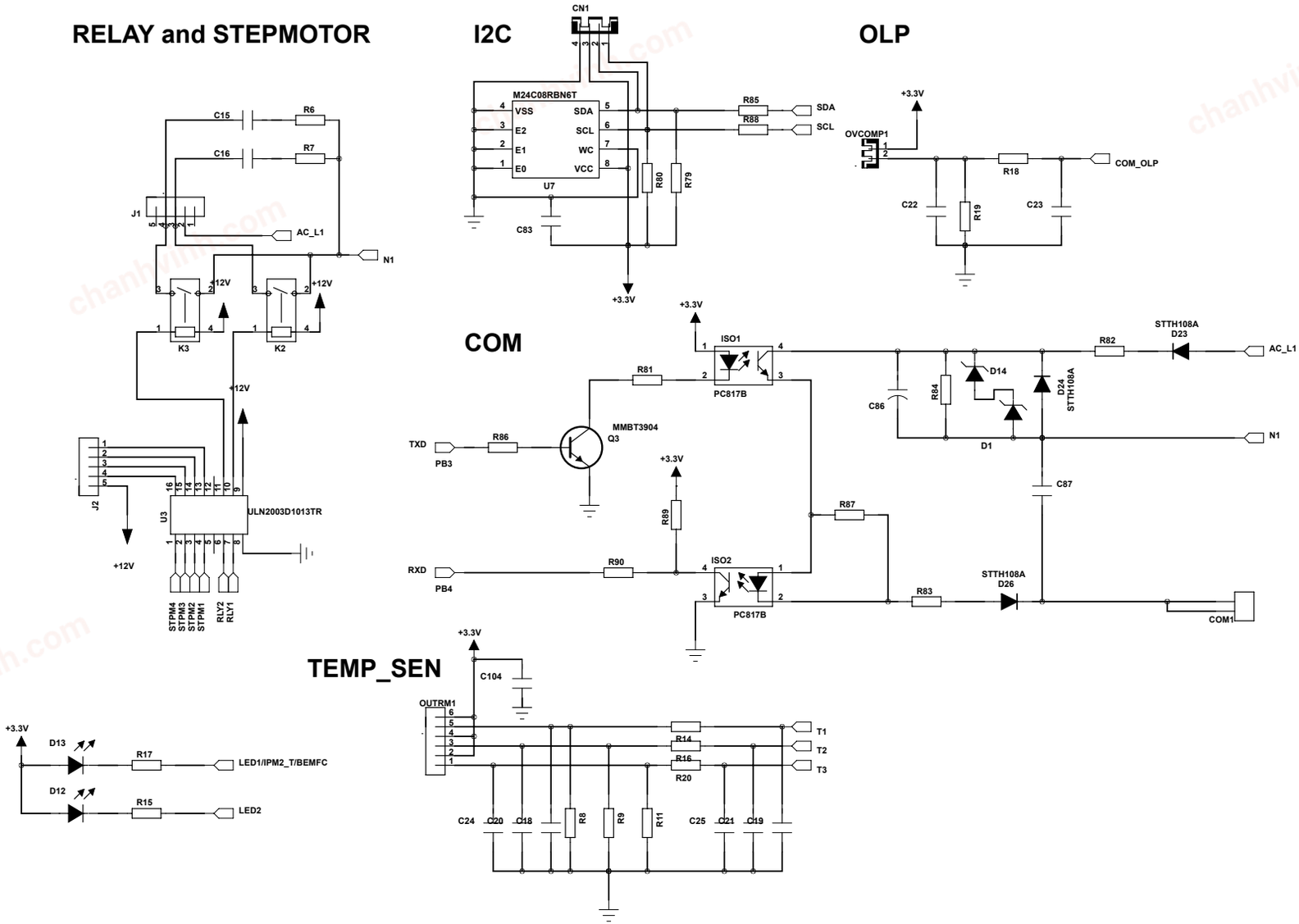

chanhvinh.com

Revision history

Table 1. **Document revision history**

Date	Version	Changes
12-Mar-2019	1	Initial release.

chanhvinh.com

IMPORTANT NOTICE – PLEASE READ CAREFULLY

STMicroelectronics NV and its subsidiaries (“ST”) reserve the right to make changes, corrections, enhancements, modifications, and improvements to ST products and/or to this document at any time without notice. Purchasers should obtain the latest relevant information on ST products before placing orders. ST products are sold pursuant to ST’s terms and conditions of sale in place at the time of order acknowledgement.

Purchasers are solely responsible for the choice, selection, and use of ST products and ST assumes no liability for application assistance or the design of Purchasers’ products.

No license, express or implied, to any intellectual property right is granted by ST herein.

Resale of ST products with provisions different from the information set forth herein shall void any warranty granted by ST for such product.

ST and the ST logo are trademarks of ST. For additional information about ST trademarks, please refer to www.st.com/trademarks. All other product or service names are the property of their respective owners.

Information in this document supersedes and replaces information previously supplied in any prior versions of this document.

© 2019 STMicroelectronics – All rights reserved

chanhvinh.com