chanhvinh.com

life.augmented

STEVAL-CTM009V1

Data brief

5 kW low voltage high current inverter for industrial motor control applications

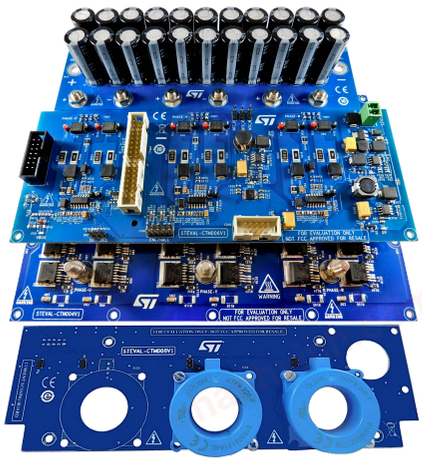

Features

- STEVAL-CTM004V1 (power board)
  - insulated metal substrate (IMS)
  - hosts 36 STH310N10F7 or STH315N10F7 power MOSFETs in the H²PAK-6 (6x switch) package
  - Decoupling gate resistors (2.2 Ω)
  - 3-shunt resistors ground referred for current sensing (optional)
  - 3 NTCs for thermal protection
- STEVAL-CTM005V1 (bulk capacitor board)
  - 22x 270 µF, 100 V through-hole aluminium electrolytic capacitor
- STEVAL-CTM006V1 (driver board)
  - based on 3x L6491 gate driver with current capability up to 4 A sink/source
  - 34-pin MC connector
  - overcurrent, overtemperature and overvoltage protection
- STEVAL-CTM008V1 (current sensing board)
  - accurate phase current sensing
  - DC current sensing (ICS not mounted)
  - possibility of overdriving VREF with an external reference voltage

Product summary	
Low voltage high current inverter for industrial motor control applications	STEVAL-CTM009V1
N-channel 100 V, 1.9 mOhm typ., 180 A STripFET F7 Power MOSFET in H²PAK-6 package	STH310N10F7-6
Automotive-grade N-channel 100 V, 2.1 mOhm typ., 180 A STripFET F7 Power MOSFET in H²PAK-6 package	STH315N10F7-6
High and low-side 4 A gate driver	L6491

Description

The STEVAL-CTM009V1 evaluation kit for motor control is designed to demonstrate the capabilities of ST Power MOSFETs based on STripFET™ F7 technology. The 100 V STripFET™ F7 devices (STH31*N10F7) are ideal for low voltage (up to 48 V), high current applications such as forklifts, golf carts and power tool.

The STEVAL-CTM009V1 kit is composed of the STEVAL-CTM004V1, STEVAL-CTM005V1, STEVAL-CTM006V1, STEVAL-CTM008V1 boards which have to assembled together to build an inverter power stage for three-phase motors.

The STEVAL-CTM004V1 power board features an insulated metal substrate (IMS), NTCs for thermal protection and decoupling gate resistors for each power MOSFET. The board mounts ST devices in the H²PAK-6 package.

The driver stage is an STEVAL-CTM006V1 board with L6491 high current capability gate drivers to drive the power MOSFETs and integrated comparator for protections. The driver board includes the ST motor control connector, so you can interface the STEVAL-CTM009V1 with any ST MCU control board suitable for motor control (not included in the kit).

The system also has an STEVAL-CTM005V1 bus link capacitor board used to connect the 48 V_{DC} power source (e.g. the battery) to manage the ripple current and an STEVAL-CTM008V1 current sensing board to read the three-phase currents and DC bus current (not assembled) thanks to the on-board ICS. The internal reference for the ICSs can be overridden by providing an external reference voltage.

chanhvinh.com

1 STEVAL-CTM0091 kit schematic diagrams

1.1 STEVAL-CTM004V1 schematic diagram

Figure 1. STEVAL-CTM004V1 power board schematic

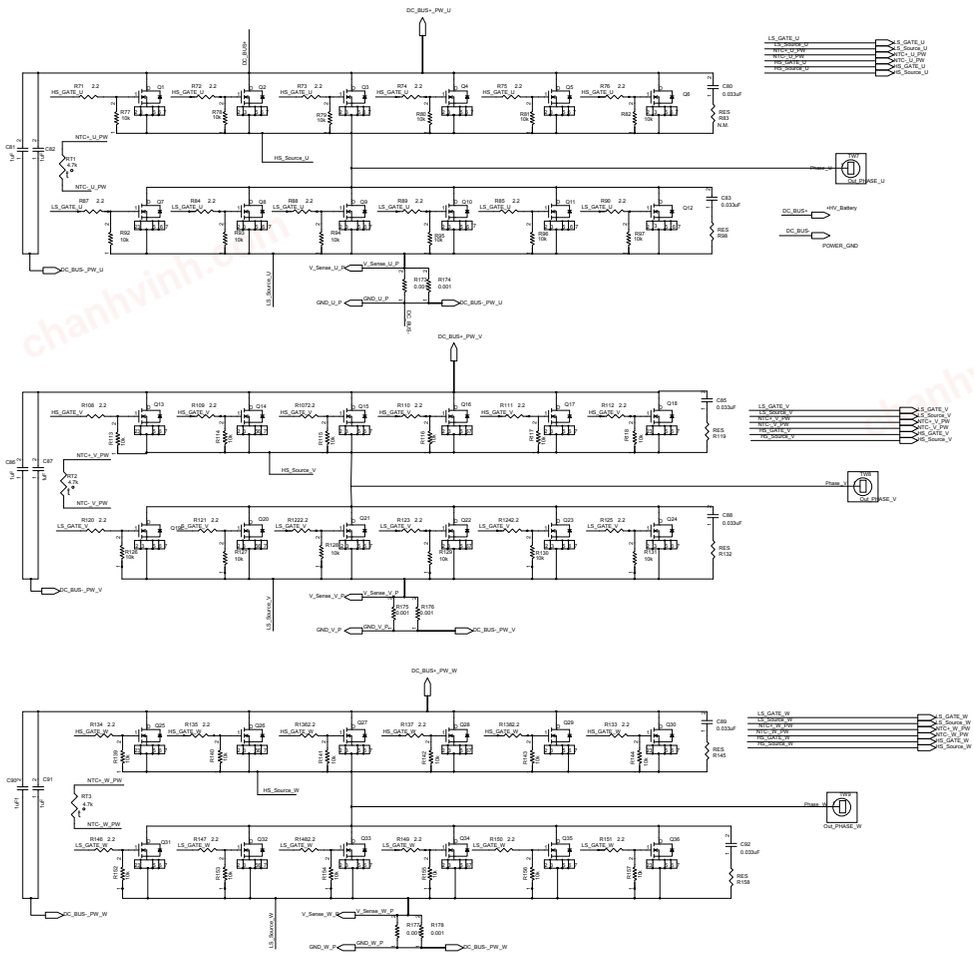

chanhvinh.com

1.2 STEVAL-CTM005V1 schematic diagram

Figure 2. STEVAL-CTM005V1 capacitor board schematic

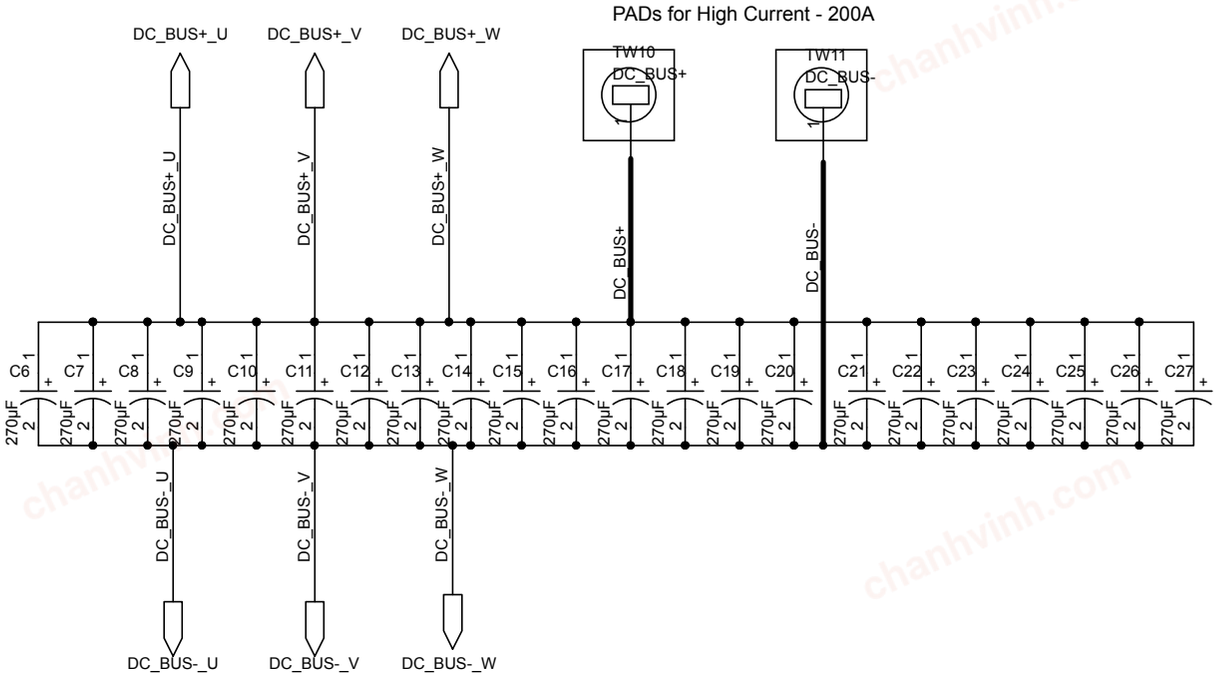

1.3 STEVAL-CTM006V1 schematic diagrams

Figure 3. STEVAL-CTM006V1 driver board schematic - main

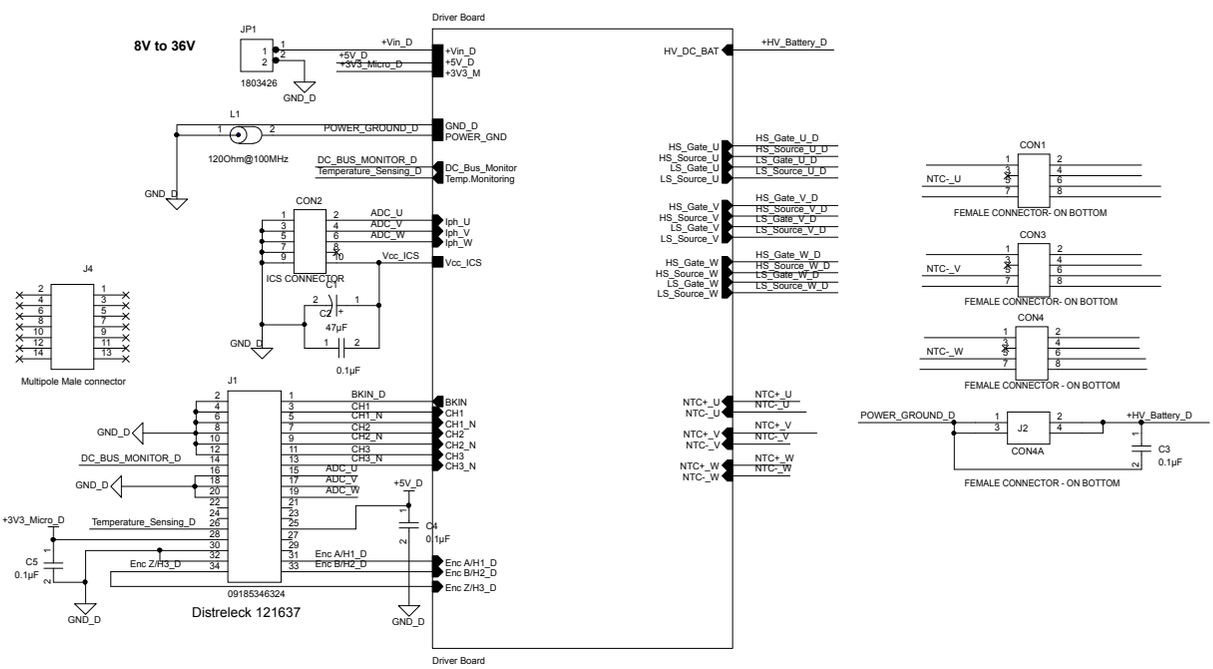

chanhvinh.com

Figure 4. **STEVAL-CTM006V1 driver board schematic - sensing**

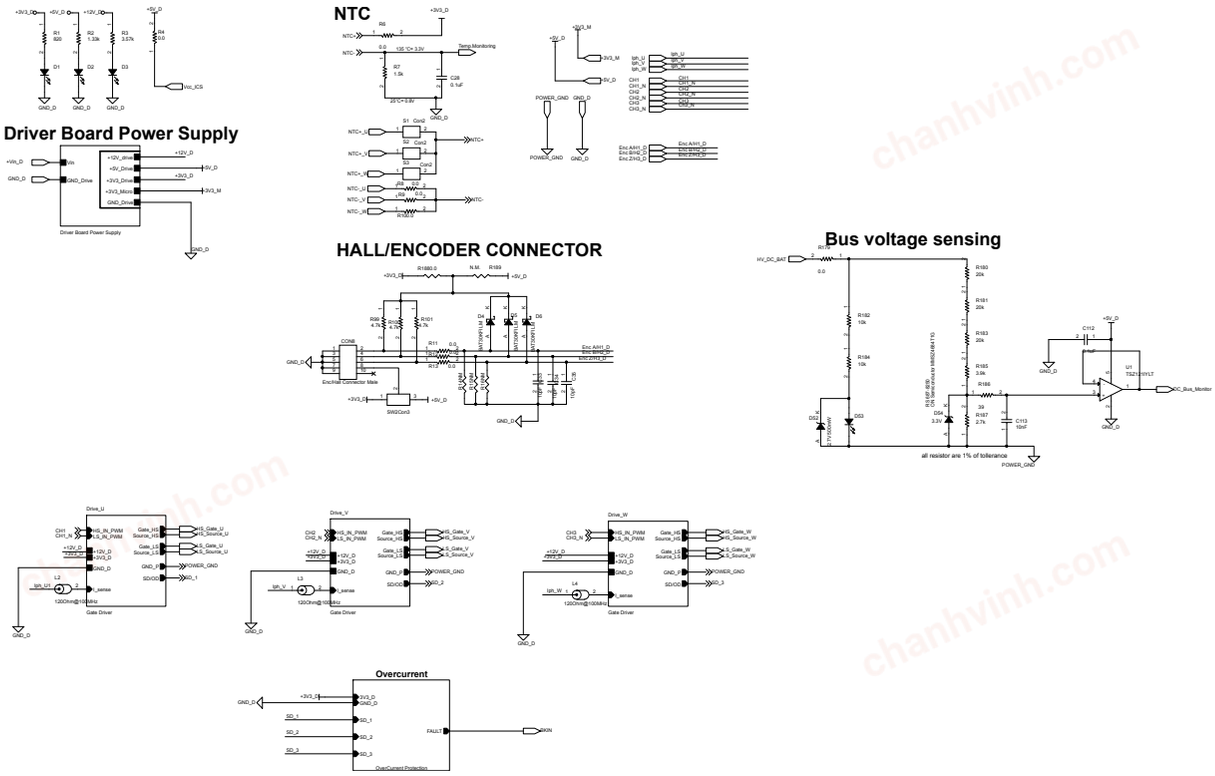

chanhvinh.com

Figure 5. STEVAL-CTM006V1 driver board schematic - gate drivers

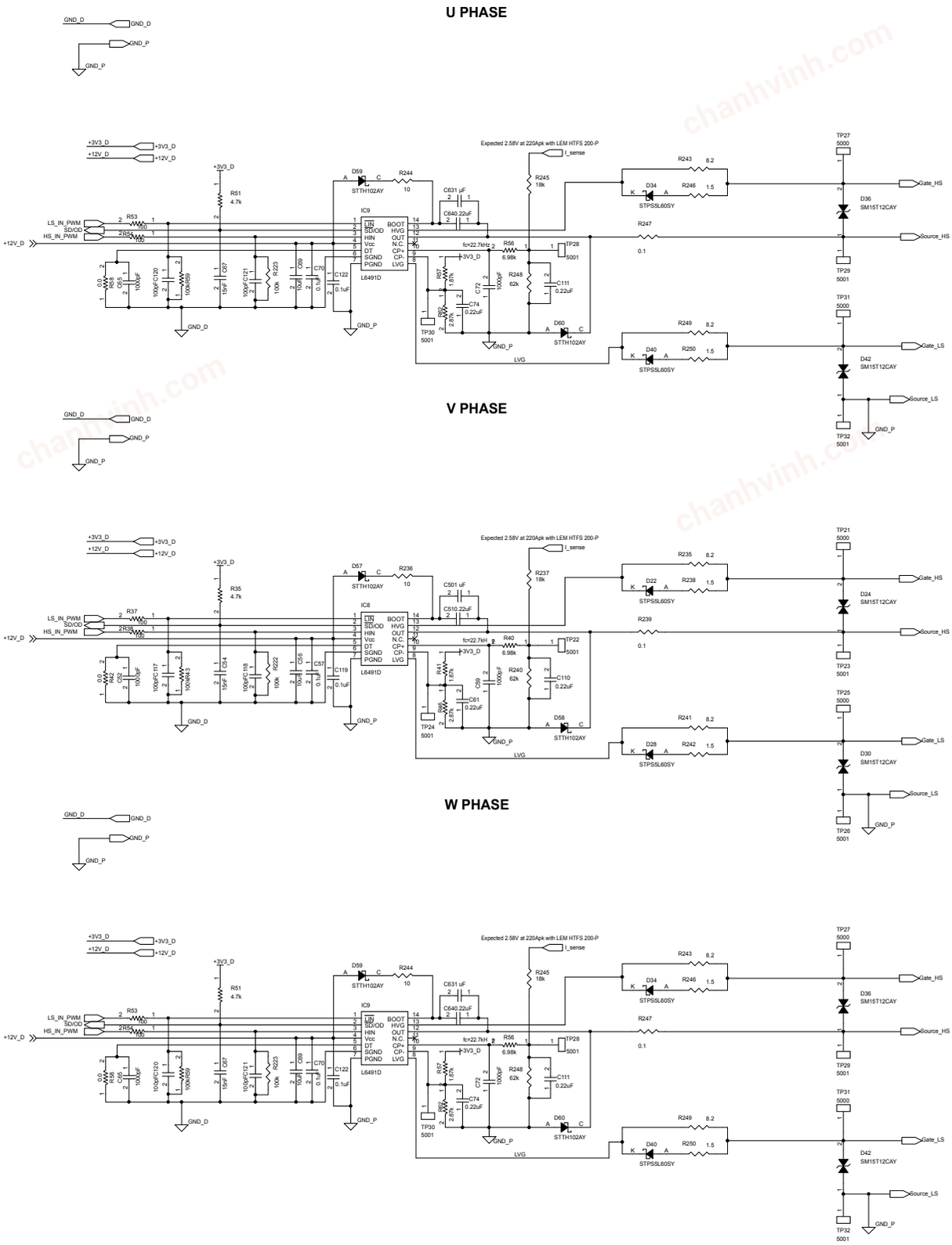

chanhvinh.com

Figure 6. **STEVAL-CTM006V1 driver board schematic - overcurrent protection**

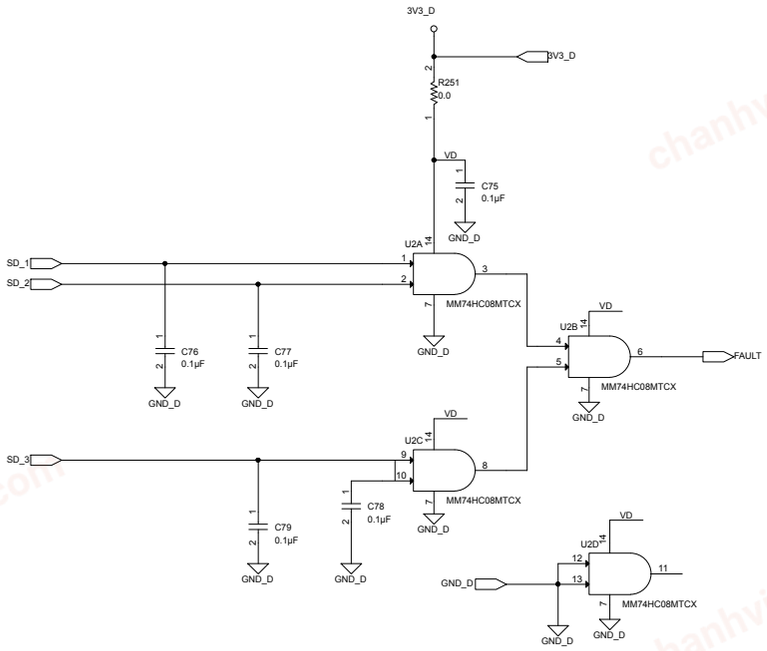

Figure 7. **STEVAL-CTM006V1 driver board schematic - power supply**

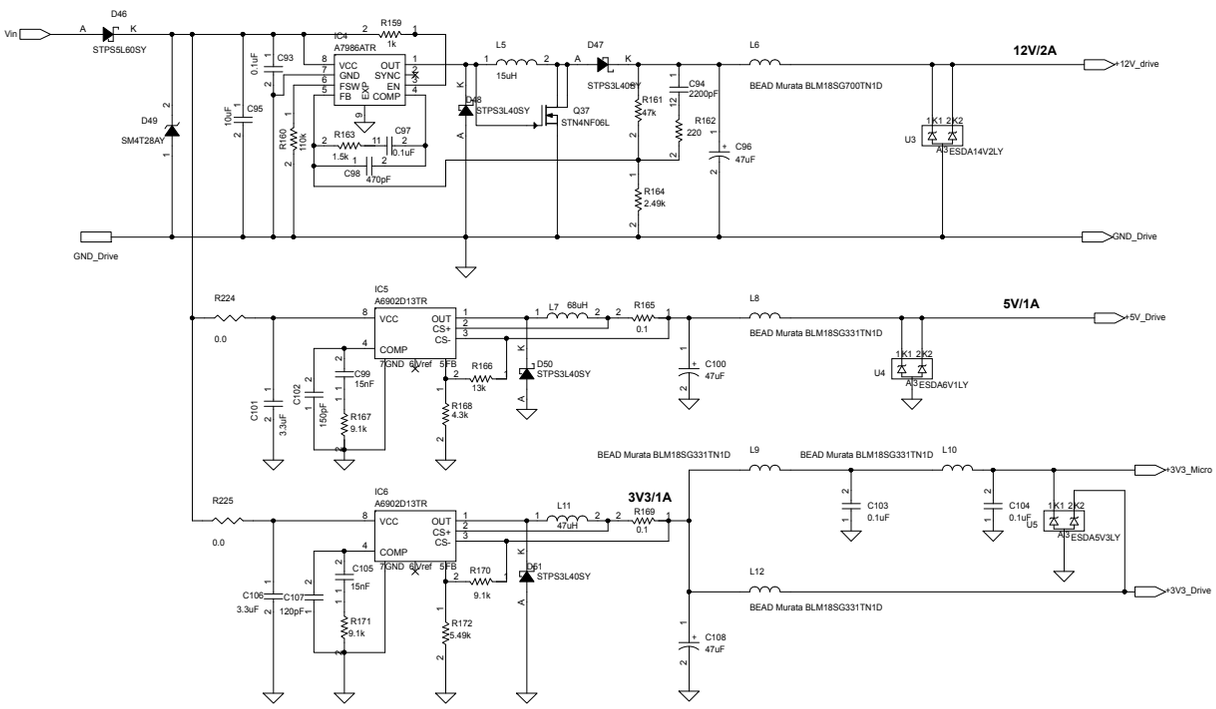

chanhvinh.com

1.4 STEVAL-CTM008V1 schematic diagram

Figure 8. **STEVAL-CTM008V1 current sensing board schematic**

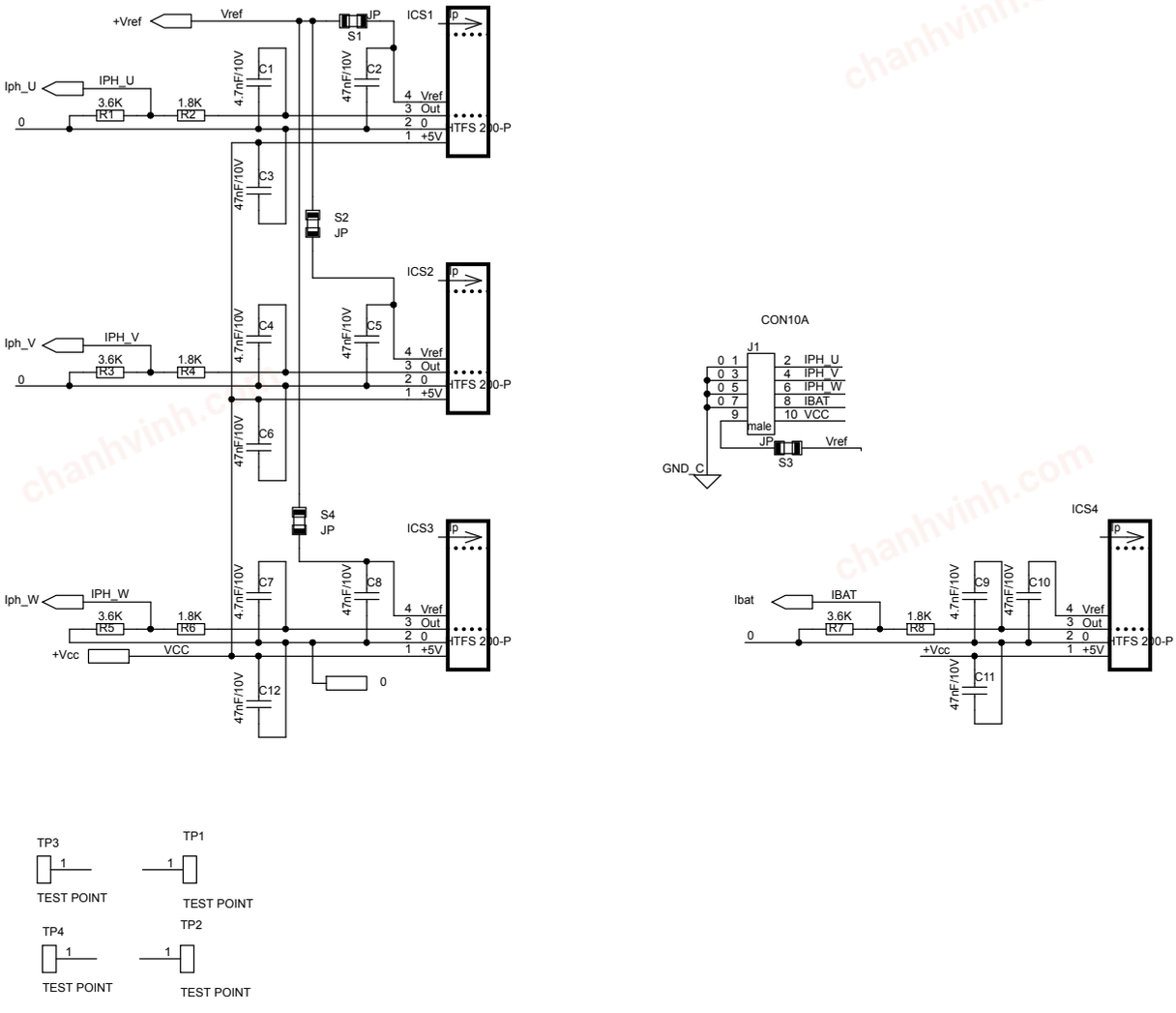

chanhvinh.com

Revision history

Table 1. **Document revision history**

Date	Version	Changes
20-Aug-2018	1	Initial release.
16-Oct-2018	2	Updated cover page image.

chanhvinh.com

IMPORTANT NOTICE – PLEASE READ CAREFULLY

STMicroelectronics NV and its subsidiaries (“ST”) reserve the right to make changes, corrections, enhancements, modifications, and improvements to ST products and/or to this document at any time without notice. Purchasers should obtain the latest relevant information on ST products before placing orders. ST products are sold pursuant to ST’s terms and conditions of sale in place at the time of order acknowledgement.

Purchasers are solely responsible for the choice, selection, and use of ST products and ST assumes no liability for application assistance or the design of Purchasers’ products.

No license, express or implied, to any intellectual property right is granted by ST herein.

Resale of ST products with provisions different from the information set forth herein shall void any warranty granted by ST for such product.

ST and the ST logo are trademarks of ST. All other product or service names are the property of their respective owners.

Information in this document supersedes and replaces information previously supplied in any prior versions of this document.

© 2018 STMicroelectronics – All rights reserved