chanhvinh.com

STD80N4F6, STU80N4F6

N-channel 40 V, 5.5 mΩ typ., 80 A STripFET™ VI DeepGATE™ Power MOSFET in DPAK and IPAK packages

Datasheet – production data

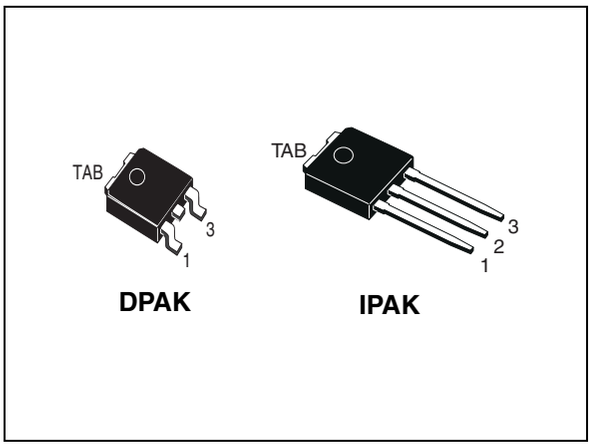

Figure 1. Internal schematic diagram

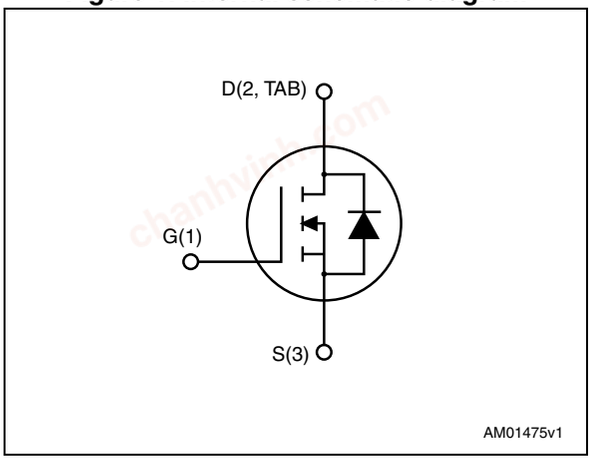

Features

Order codes	V_{DS}	$R_{DS(on)}$ max	I_D
STD80N4F6	40 V	6.0 mΩ	80 A
STU80N4F6		6.3 mΩ	

- Low gate charge
- Very low on-resistance
- High avalanche ruggedness

Applications

- Switching applications

Description

These devices are N-channel Power MOSFETs developed using the 6th generation of STripFET™ DeepGATE™ technology, with a new gate structure. The resulting Power MOSFETs exhibits the lowest $R_{DS(on)}$ in all packages.

Table 1. Device summary

Order codes	Marking	Package	Packaging
STD80N4F6	80N4F6	DPAK	Tape and reel
STU80N4F6		IPAK	Tube

This is information on a product in full production. www.st.com

chanhvinh.com

Contents

1 Electrical ratings 3

2 Electrical characteristics 4

2.1 Electrical characteristics (curves) 6

3 Test circuits 8

4 Package mechanical data 9

5 Packaging mechanical data 15

6 Revision history 17

chanhvinh.com

1 Electrical ratings

Table 2. Absolute maximum ratings

Symbol	Parameter	Value	Unit
V_{DS}	Drain-source voltage	40	V
V_{GS}	Gate-source voltage	± 20	V
I_D (1)	Drain current (continuous) at T_C = 25 °C	80 (1)	A
I_D (1)	Drain current (continuous) at T_C = 100 °C	56 (1)	A
I_{DM} (2)	Drain current (pulsed)	320 (1)	A
P_{TOT}	Total dissipation at T_C = 25 °C	70	W
I_{AV}	Avalanche current, repetitive or not-repetitive (pulse width limited by T_{Jmax})	40	A
E_{AS}	Single pulse avalanche energy (starting T_j = 25 °C, I_D = I_{AV}, V_{DD} = 25 V)	149	mJ
	Derating factor	0.47	W/°C
T_{stg}	Storage temperature	-55 to 175	°C
T_j	Max. operating junction temperature		°C

1. Current limited by package.
2. Pulse width limited by safe operating area

Table 3. Thermal data

Symbol	Parameter	Value		Unit
		DPAK	IPAK	
$R_{thj\text{-}case}$	Thermal resistance junction-case max	2.14		°C/W
$R_{thj\text{-}amb}$	Thermal resistance junction-ambient max		100	°C/W
$R_{thj\text{-}pcb}$ (1)	Thermal resistance junction-ambient max	50		°C/W

1. When mounted on FR-4 board of inch^2, 2 oz Cu

chanhvinh.com

2 Electrical characteristics

(T_C = 25 °C unless otherwise specified)

Table 4. On /off states

Symbol	Parameter	Test conditions	Min.	Typ.	Max.	Unit
$V_{(BR)DSS}$	Drain-source breakdown voltage	I_D = 250 µA, V_{GS} = 0	40			V
I_{DSS}	Zero gate voltage drain current (V_{GS} = 0)	V_{DS} = 40 V V_{DS} = 40 V, T_C=125 °C			1 100	µA µA
I_{GSS}	Gate-body leakage current (V_{DS} = 0)	V_{GS} = ± 20 V			± 100	nA
$V_{GS(th)}$	Gate threshold voltage	V_{DS} = V_{GS}, I_D = 250 µA	2		4	V
$R_{DS(on)}$	Static drain-source on-resistance	V_{GS} = 10 V, I_D = 40 A for DPAK for IPAK		5.5 5.8	6 6.3	mΩ mΩ

Table 5. Dynamic

Symbol	Parameter	Test conditions	Min.	Typ.	Max.	Unit
C_{iss}	Input capacitance	V_{DS} = 25 V, f = 1 MHz, V_{GS} = 0	-	2150	-	pF
C_{oss}	Output capacitance		-	335	-	pF
C_{rss}	Reverse transfer capacitance		-	160	-	pF
Q_g	Total gate charge	V_{DD} = 20 V, I_D = 80 A, V_{GS} = 10 V (see *Figure 14*)	-	36	-	nC
Q_{gs}	Gate-source charge		-	11	-	nC
Q_{gd}	Gate-drain charge		-	9	-	nC

Table 6. Switching times

Symbol	Parameter	Test conditions	Min.	Typ.	Max	Unit
$t_{d(on)}$	Turn-on delay time	V_{DD} = 20 V, I_D = 40 A, R_G = 4.7 Ω, V_{GS} = 10 V (see *Figure 15*)	-	10.5	-	ns
t_r	Rise time		-	7.6	-	ns
t_d(off)	Turn-off delay time		-	46.1	-	ns
t_f	Fall time		-	11.9	-	ns

chanhvinh.com

Table 7. Source drain diode

Symbol	Parameter	Test conditions	Min.	Typ.	Max.	Unit
I_{SD}	Source-drain current		-		80	A
I_{SDM} (1)	Source-drain current (pulsed)		-		320	A
V_{SD} (2)	Forward on voltage	I_{SD} = 40 A, V_{GS} = 0	-		1.3	V
t_{rr}	Reverse recovery time	I_{SD} = 80 A, di/dt = 100 A/µs V_{DD} = 32 V (see *Figure 17*)	-	41.1		ns
Q_{rr}	Reverse recovery charge		-	43.6		nC
I_{RRM}	Reverse recovery current		-	2.1		A

1. Pulse width limited by safe operating area.
2. Pulsed: pulse duration = 300 µs, duty cycle 1.5%

chanhvinh.com

2.1 Electrical characteristics (curves)

Figure 2. Safe operating area

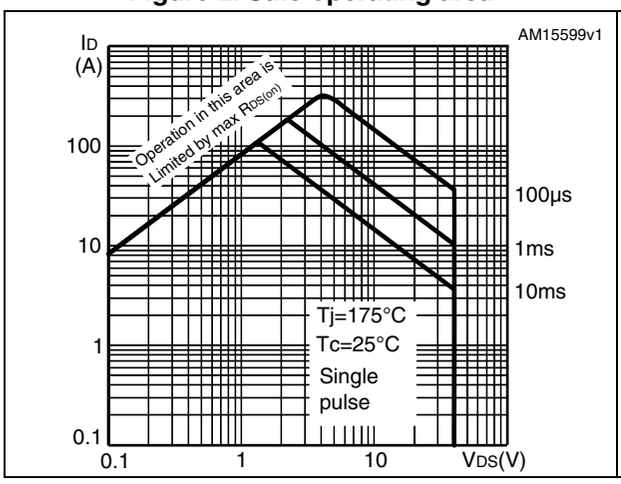

Figure 3. Thermal impedance

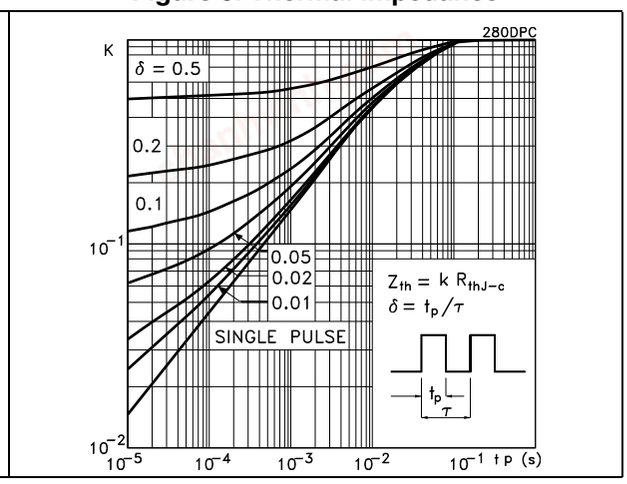

Figure 4. Output characteristics

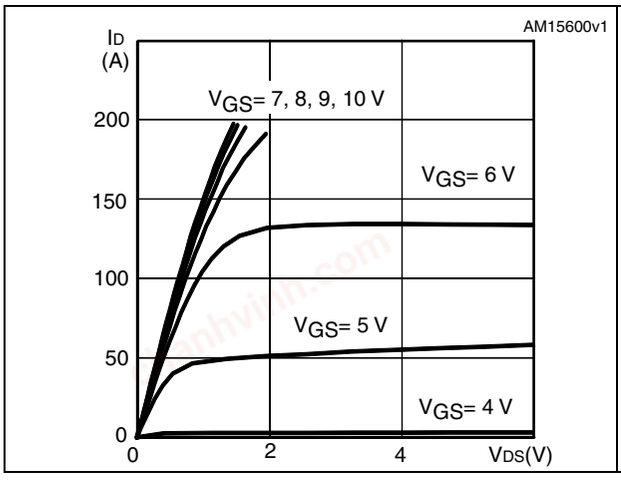

Figure 5. Transfer characteristics

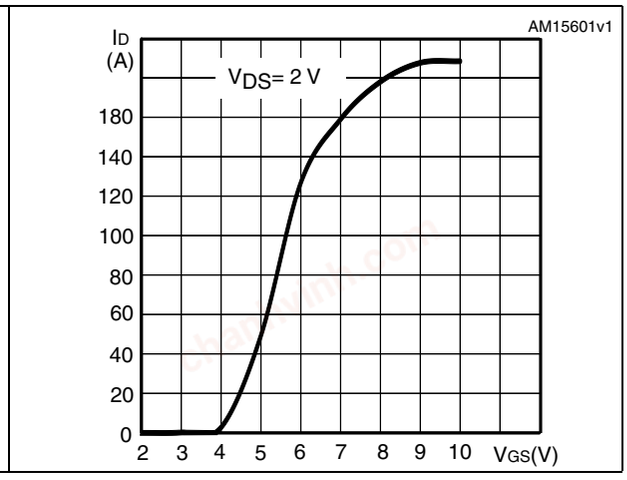

Figure 6. Gate charge vs gate-source voltage

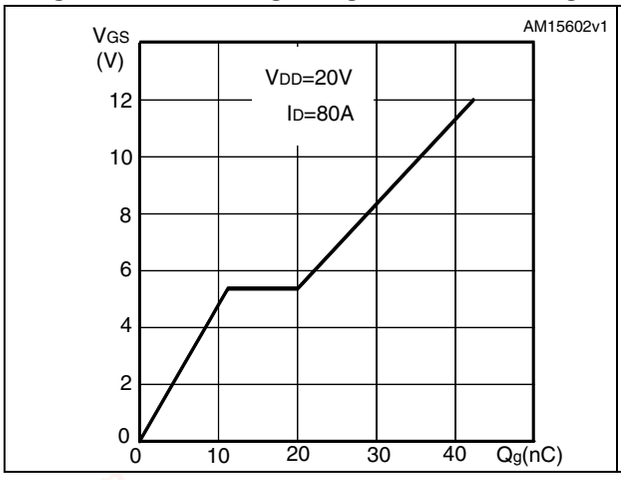

Figure 7. Static drain-source on-resistance

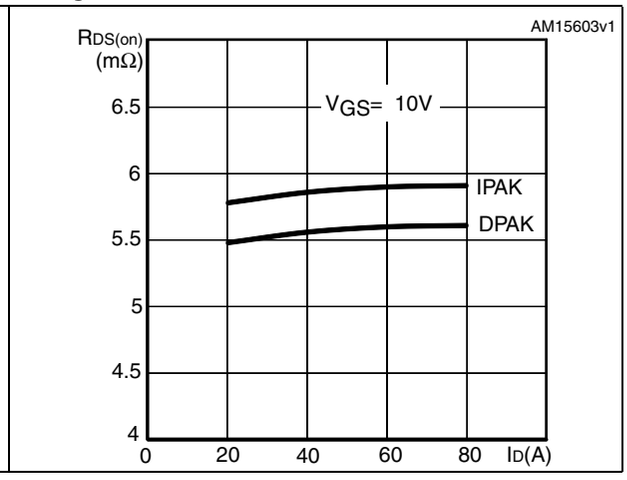

chanhvinh.com

Figure 8. Capacitance variations

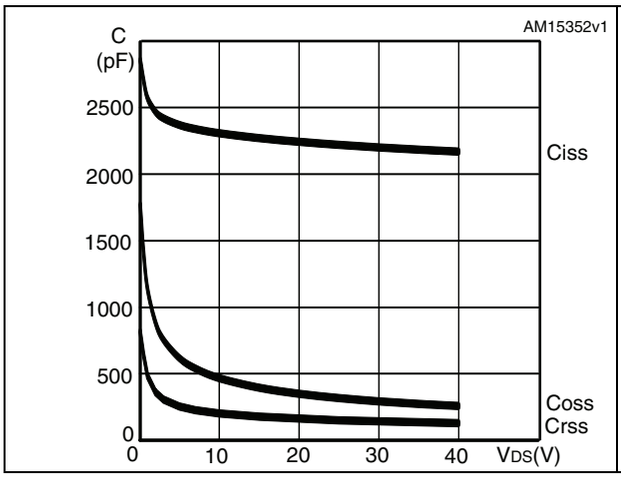

Figure 9. Drain-source diode forward characteristics

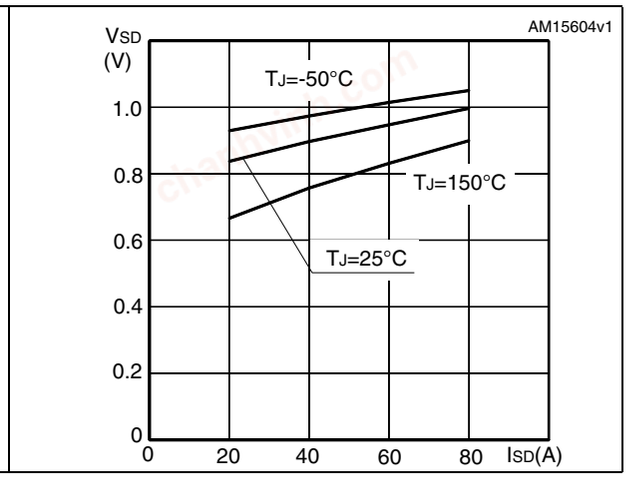

Figure 10. Normalized gate threshold voltage vs temperature

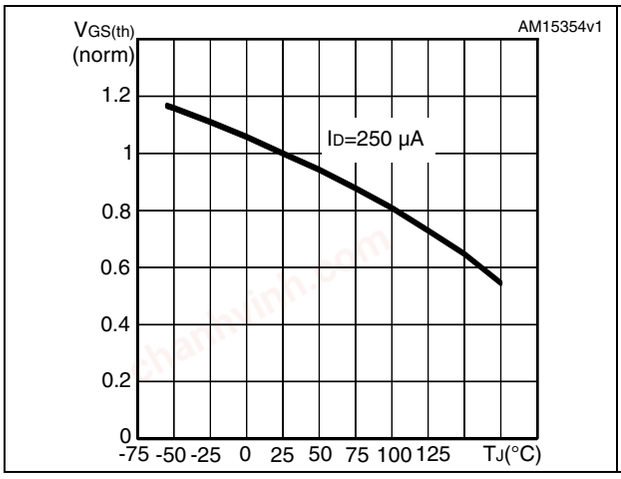

Figure 11. Normalized on-resistance vs temperature

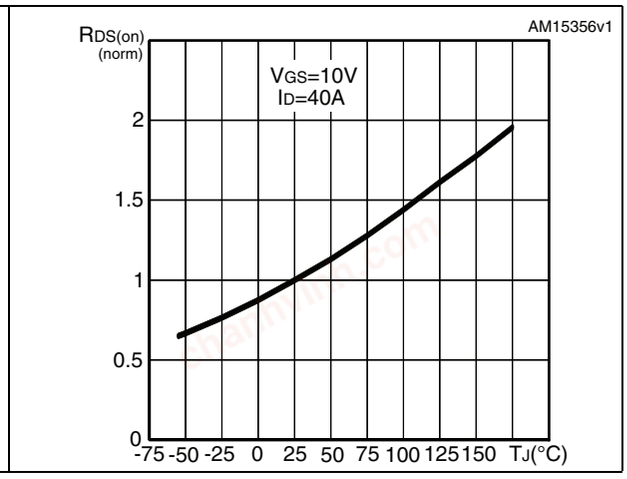

Figure 12. Normalized B_{VDSS} vs temperature

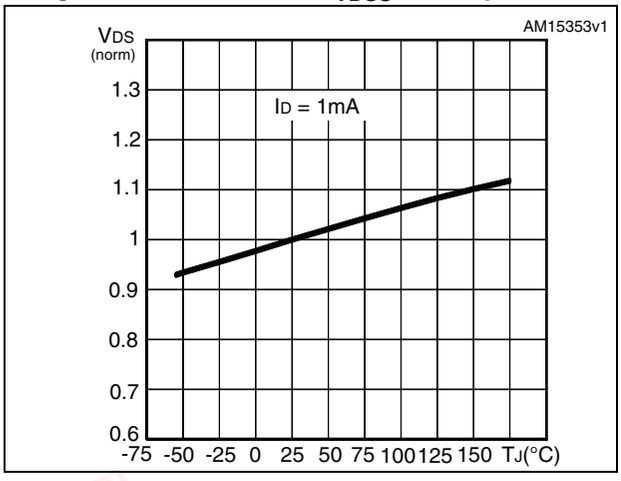

chanhvinh.com

3 Test circuits

Figure 13. Switching times test circuit for resistive load

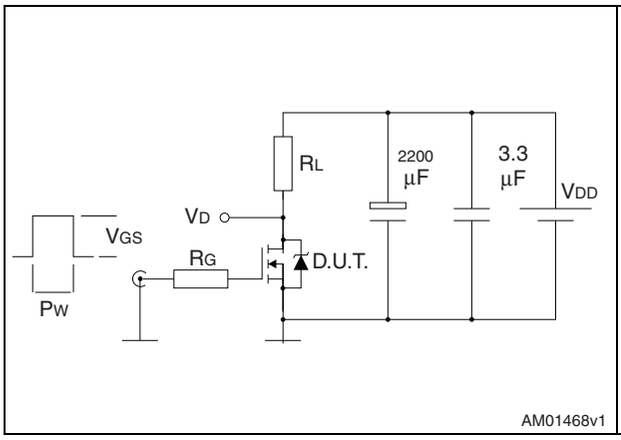

Figure 14. Gate charge test circuit

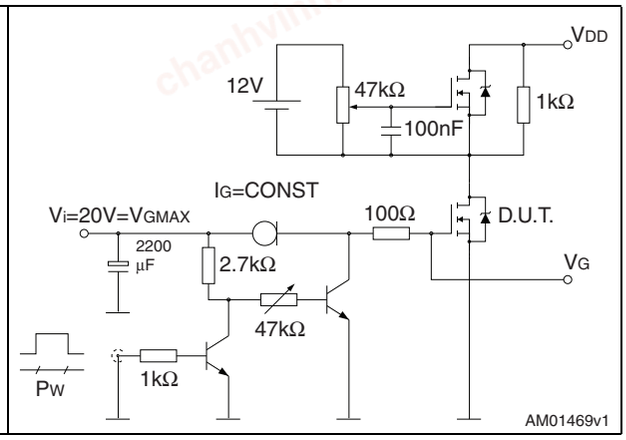

Figure 15. Test circuit for inductive load switching and diode recovery times

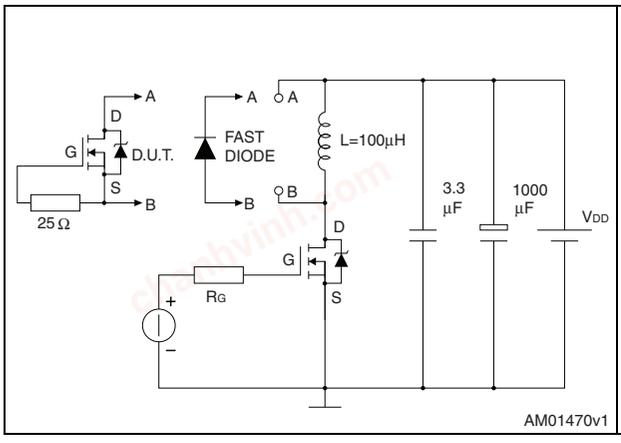

Figure 16. Unclamped inductive load test circuit

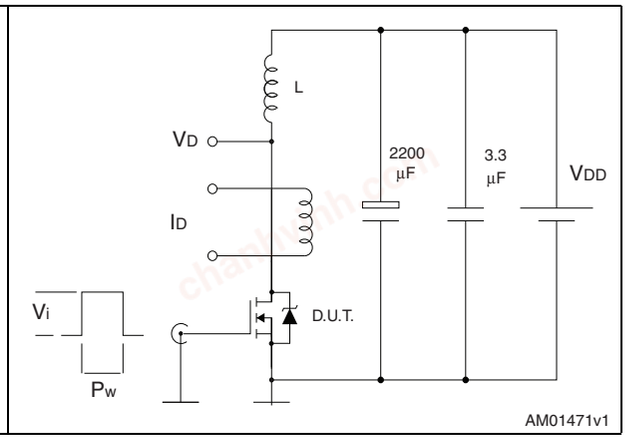

Figure 17. Unclamped inductive waveform

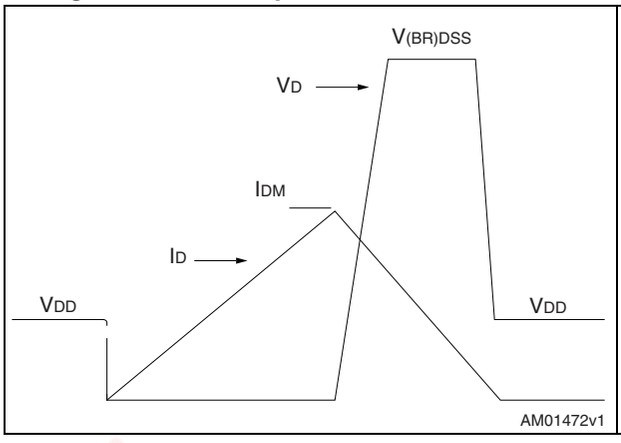

Figure 18. Switching time waveform

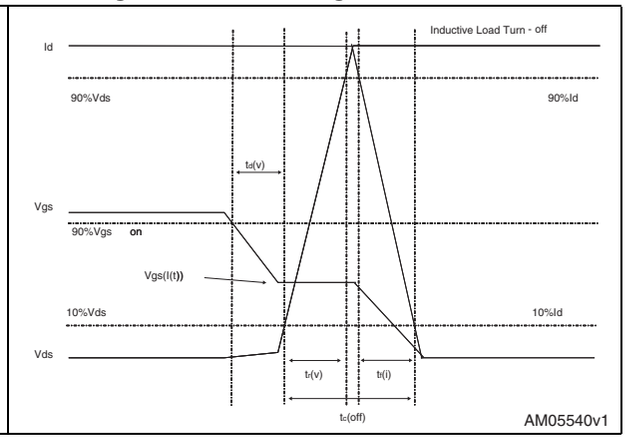

chanhvinh.com

4 Package mechanical data

In order to meet environmental requirements, ST offers these devices in different grades of ECOPACK® packages, depending on their level of environmental compliance. ECOPACK® specifications, grade definitions and product status are available at: *www.st.com*.
ECOPACK is an ST trademark.

chanhvinh.com

Table 8. DPAK (TO-252) mechanical data

Dim.	mm		
	Min.	Typ.	Max.
A	2.20		2.40
A1	0.90		1.10
A2	0.03		0.23
b	0.64		0.90
b4	5.20		5.40
c	0.45		0.60
c2	0.48		0.60
D	6.00		6.20
D1		5.10	
E	6.40		6.60
E1		4.70	
e		2.28	
e1	4.40		4.60
H	9.35		10.10
L	1.00		1.50
(L1)		2.80	
L2		0.80	
L4	0.60		1.00
R		0.20	
V2	0°		8°

chanhvinh.com

Figure 19. DPAK (TO-252) drawing

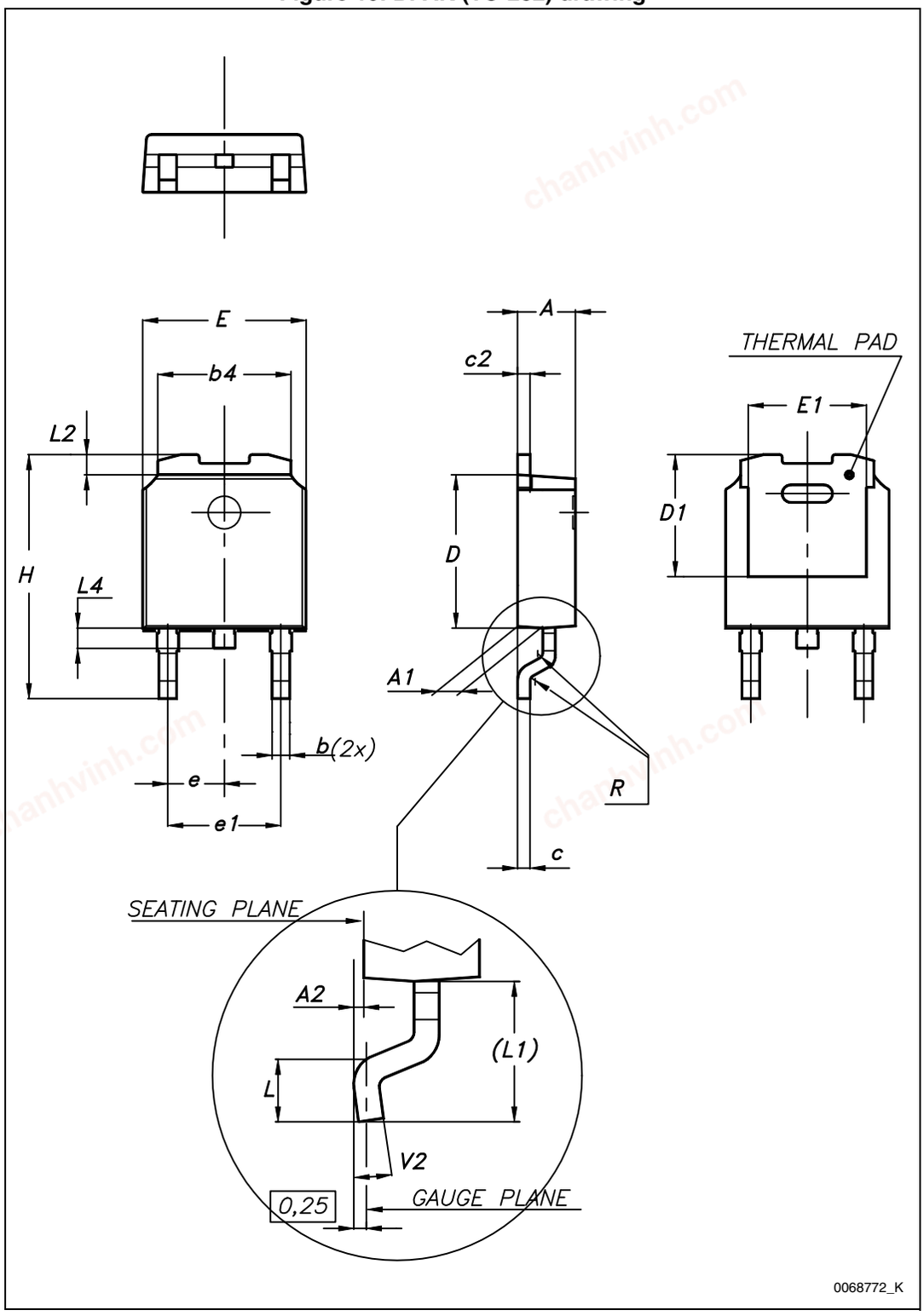

chanhvinh.com

Figure 20. DPAK footprint [a]

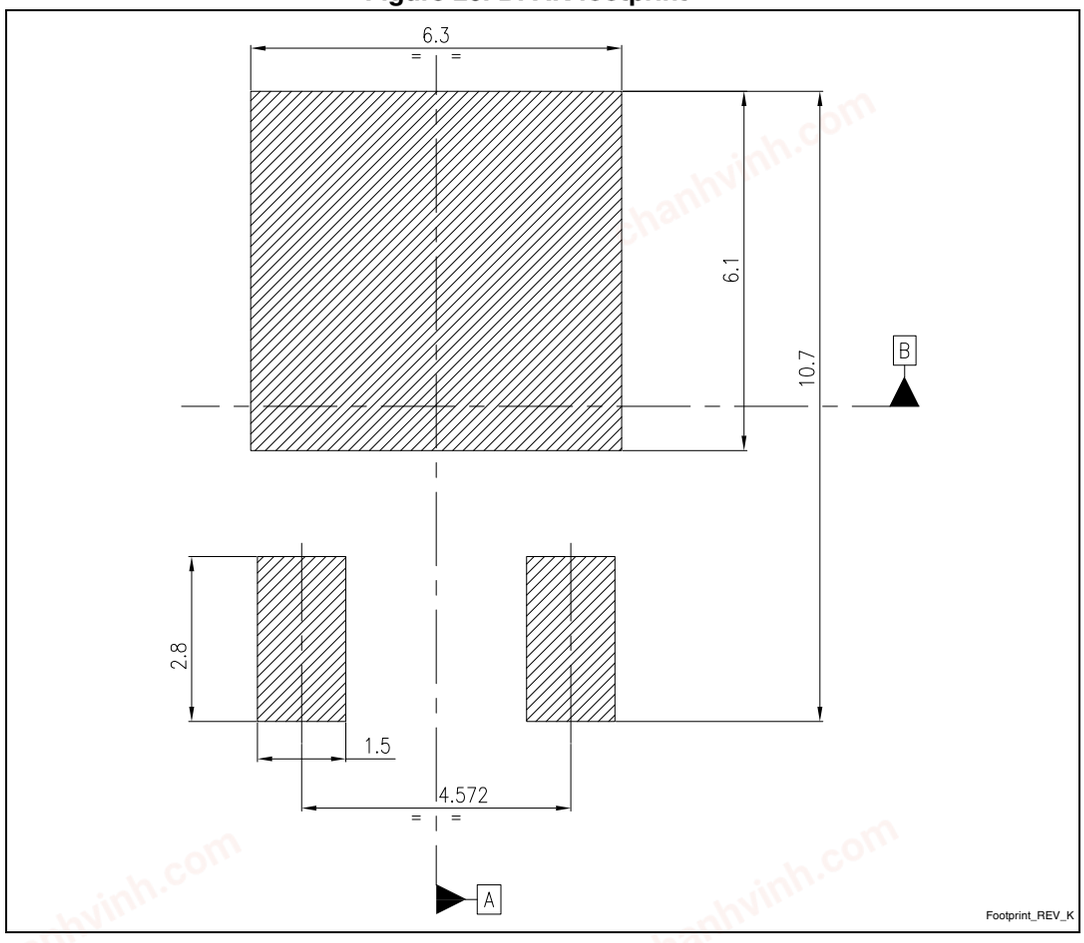

a. All dimensions are in millimeters

chanhvinh.com

Table 9. IPAK (TO-251) mechanical data

DIM	mm.		
	min.	typ.	max.
A	2.20		2.40
A1	0.90		1.10
b	0.64		0.90
b2			0.95
b4	5.20		5.40
B5		0.30	
c	0.45		0.60
c2	0.48		0.60
D	6.00		6.20
E	6.40		6.60
e		2.28	
e1	4.40		4.60
H		16.10	
L	9.00		9.40
L1	0.80		1.20
L2		0.80	1.00
V1		10°	

chanhvinh.com

Figure 21. IPAK (TO-251) drawing

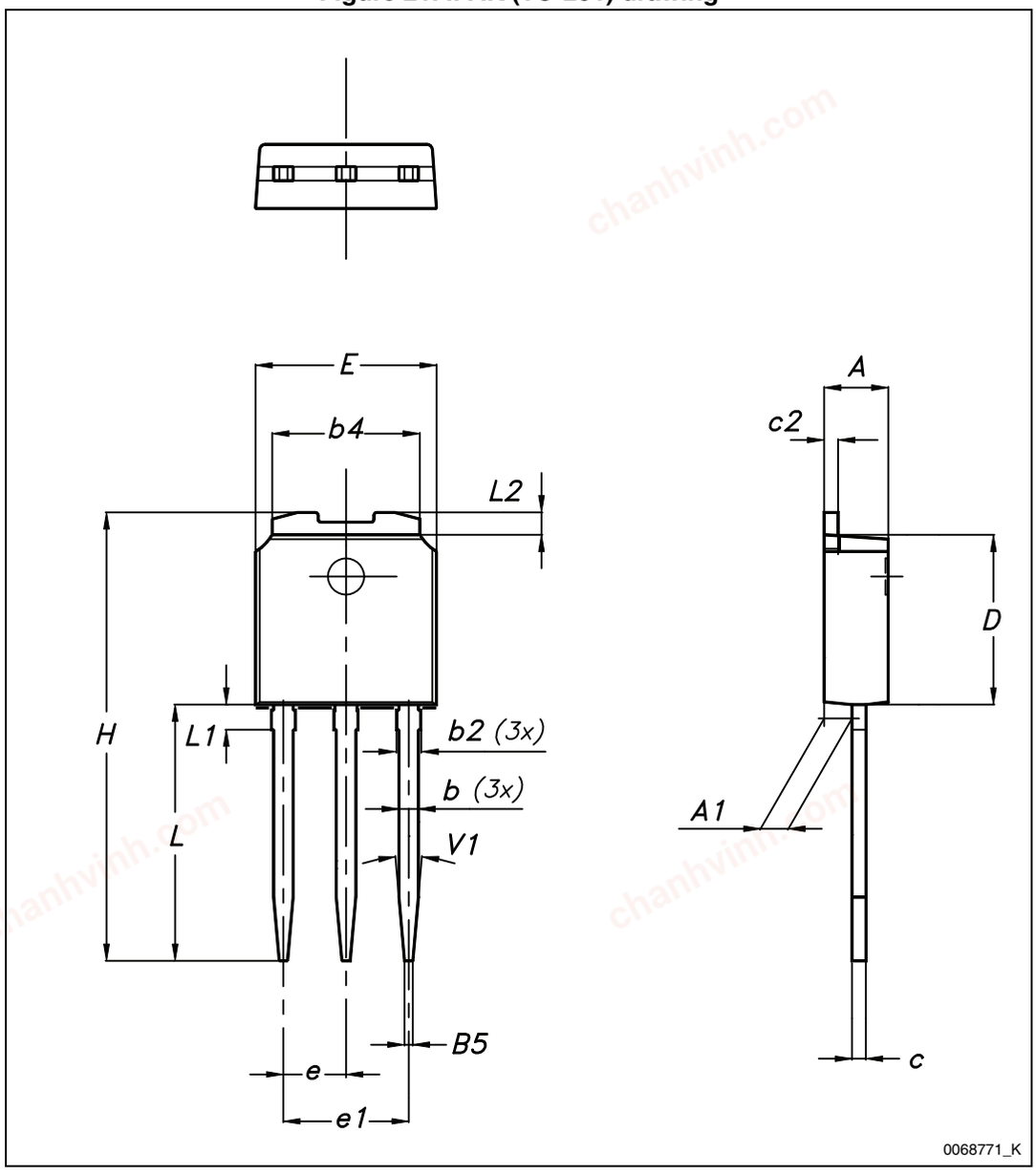

chanhvinh.com

5 Packaging mechanical data

Table 10. DPAK (TO-252) tape and reel mechanical data

Tape			Reel		
Dim.	mm		Dim.	mm	
	Min.	Max.		Min.	Max.
A0	6.8	7	A		330
B0	10.4	10.6	B	1.5	
B1		12.1	C	12.8	13.2
D	1.5	1.6	D	20.2	
D1	1.5		G	16.4	18.4
E	1.65	1.85	N	50	
F	7.4	7.6	T		22.4
K0	2.55	2.75			
P0	3.9	4.1	Base qty.		2500
P1	7.9	8.1	Bulk qty.		2500
P2	1.9	2.1			
R	40				
T	0.25	0.35			
W	15.7	16.3			

chanhvinh.com

Figure 22. Tape for DPAK (TO-252)

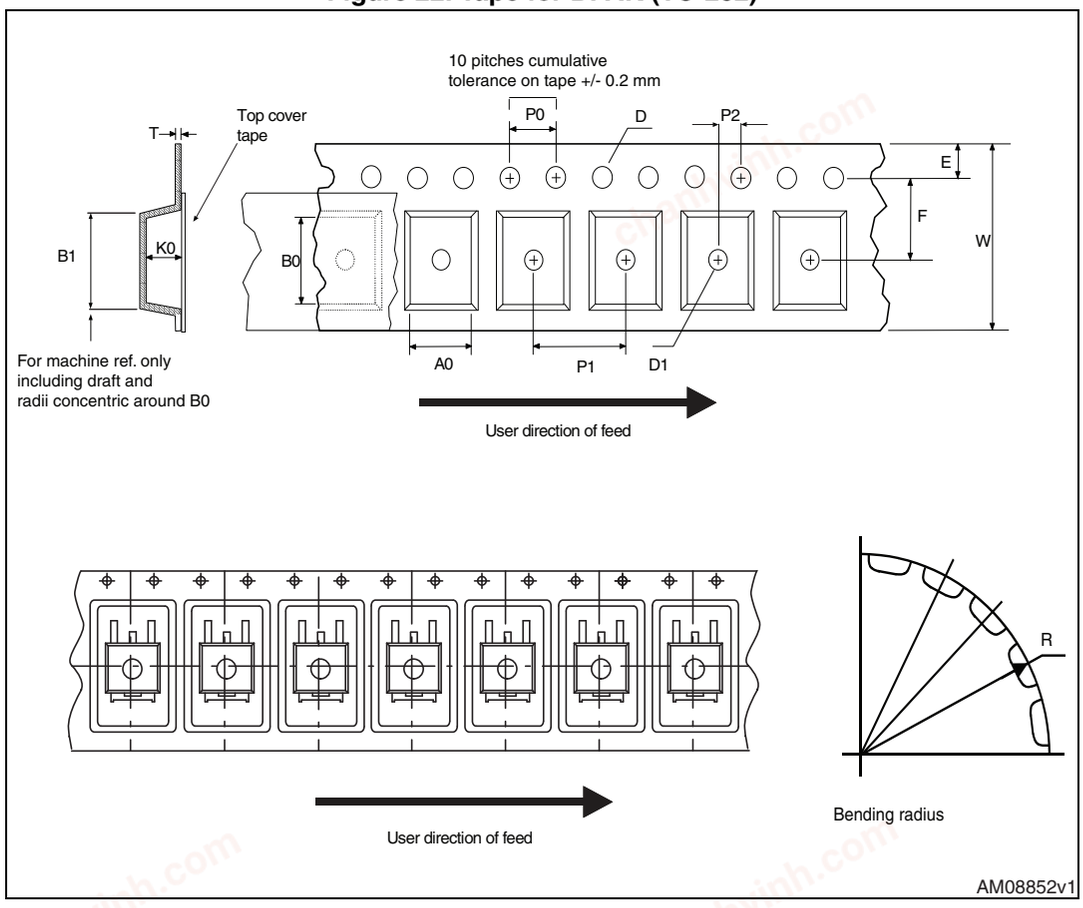

Figure 23. Reel for DPAK (TO-252)

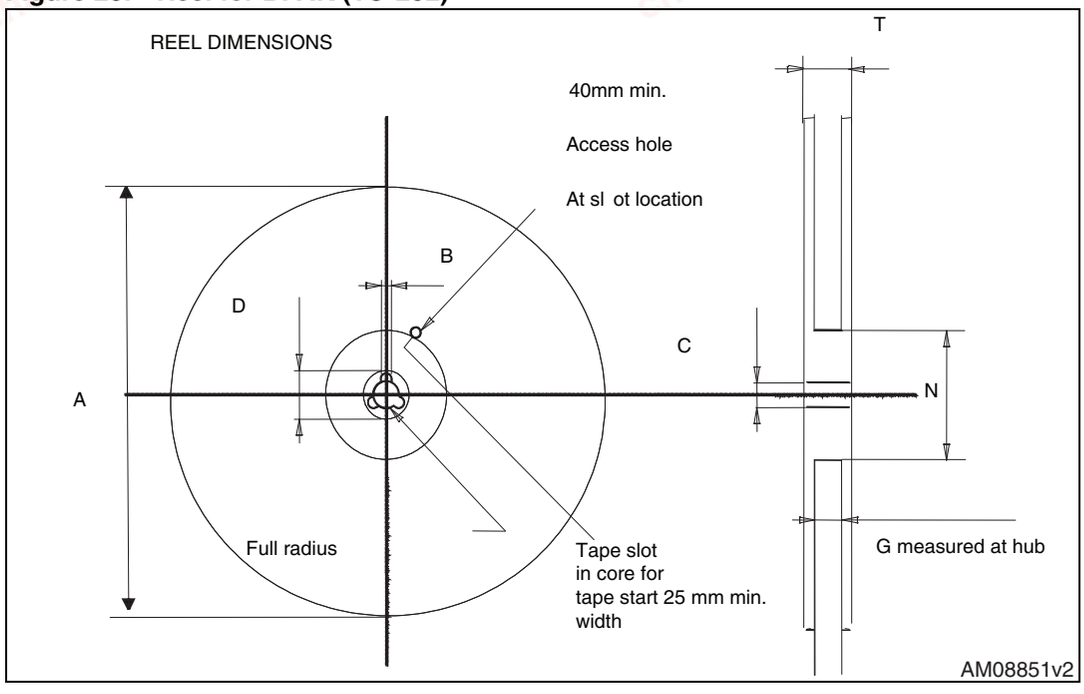

chanhvinh.com

6 Revision history

Table 11. Document revision history

Date	Revision	Changes
26-Oct-2012	1	Initial release.
01-Mar-2013	2	– Added: IPAK package – The part number STI80N4F6 has been moved to a separate datasheet – Added: *Figure 2*, *3*, *4*, *5*, *6*, *7* and *9*
05-Mar-2013	3	– Minor text changes – Modified: *Table 3*

chanhvinh.com

Please Read Carefully:

Information in this document is provided solely in connection with ST products. STMicroelectronics NV and its subsidiaries (“ST”) reserve the right to make changes, corrections, modifications or improvements, to this document, and the products and services described herein at any time, without notice.

All ST products are sold pursuant to ST’s terms and conditions of sale.

Purchasers are solely responsible for the choice, selection and use of the ST products and services described herein, and ST assumes no liability whatsoever relating to the choice, selection or use of the ST products and services described herein.

No license, express or implied, by estoppel or otherwise, to any intellectual property rights is granted under this document. If any part of this document refers to any third party products or services it shall not be deemed a license grant by ST for the use of such third party products or services, or any intellectual property contained therein or considered as a warranty covering the use in any manner whatsoever of such third party products or services or any intellectual property contained therein.

UNLESS OTHERWISE SET FORTH IN ST’S TERMS AND CONDITIONS OF SALE ST DISCLAIMS ANY EXPRESS OR IMPLIED WARRANTY WITH RESPECT TO THE USE AND/OR SALE OF ST PRODUCTS INCLUDING WITHOUT LIMITATION IMPLIED WARRANTIES OF MERCHANTABILITY, FITNESS FOR A PARTICULAR PURPOSE (AND THEIR EQUIVALENTS UNDER THE LAWS OF ANY JURISDICTION), OR INFRINGEMENT OF ANY PATENT, COPYRIGHT OR OTHER INTELLECTUAL PROPERTY RIGHT.

ST PRODUCTS ARE NOT AUTHORIZED FOR USE IN WEAPONS. NOR ARE ST PRODUCTS DESIGNED OR AUTHORIZED FOR USE IN: (A) SAFETY CRITICAL APPLICATIONS SUCH AS LIFE SUPPORTING, ACTIVE IMPLANTED DEVICES OR SYSTEMS WITH PRODUCT FUNCTIONAL SAFETY REQUIREMENTS; (B) AERONAUTIC APPLICATIONS; (C) AUTOMOTIVE APPLICATIONS OR ENVIRONMENTS, AND/OR (D) AEROSPACE APPLICATIONS OR ENVIRONMENTS. WHERE ST PRODUCTS ARE NOT DESIGNED FOR SUCH USE, THE PURCHASER SHALL USE PRODUCTS AT PURCHASER’S SOLE RISK, EVEN IF ST HAS BEEN INFORMED IN WRITING OF SUCH USAGE, UNLESS A PRODUCT IS EXPRESSLY DESIGNATED BY ST AS BEING INTENDED FOR “AUTOMOTIVE, AUTOMOTIVE SAFETY OR MEDICAL” INDUSTRY DOMAINS ACCORDING TO ST PRODUCT DESIGN SPECIFICATIONS. PRODUCTS FORMALLY ESCC, QML OR JAN QUALIFIED ARE DEEMED SUITABLE FOR USE IN AEROSPACE BY THE CORRESPONDING GOVERNMENTAL AGENCY.

Resale of ST products with provisions different from the statements and/or technical features set forth in this document shall immediately void any warranty granted by ST for the ST product or service described herein and shall not create or extend in any manner whatsoever, any liability of ST.

ST and the ST logo are trademarks or registered trademarks of ST in various countries.
Information in this document supersedes and replaces all information previously supplied.
The ST logo is a registered trademark of STMicroelectronics. All other names are the property of their respective owners.

© 2013 STMicroelectronics - All rights reserved

STMicroelectronics group of companies

Australia - Belgium - Brazil - Canada - China - Czech Republic - Finland - France - Germany - Hong Kong - India - Israel - Italy - Japan - Malaysia - Malta - Morocco - Philippines - Singapore - Spain - Sweden - Switzerland - United Kingdom - United States of America

www.st.com