chanhvinh.com

BTA08, BTB08, T810, T835

Snubberless™, logic level and standard 8 A Triacs

Datasheet – production data

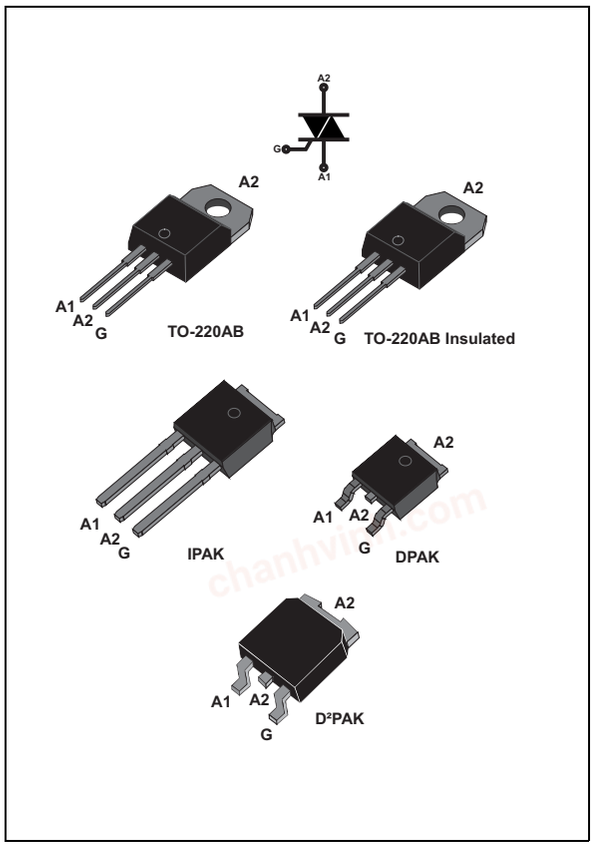

Description

Available either in through-hole or surface-mount packages, the BTA08, BTB08, T810, T835 is suitable for general purpose AC switching. It can be used as an ON/OFF function in applications such as static relays, heating regulation, induction motor starting circuits or for phase control operation in light dimmers and motor speed controllers, etc.

The Snubberless versions (BTABTB08_xxxxW and T8 series) are specially recommended for use on inductive loads, thanks to their high commutation performances.

Logic level versions are designed to interface directly with low power drivers such as micro-controller.

By using an internal ceramic pad, the BTA series provides voltage insulated tab (rated at 2500 VRMS) complying with UL standards (file ref.: E81734).

Features

- On-state rms current, $I_{T(RMS)}$ 8 A
- Repetitive peak off-state voltage, V_{DRM}/V_{RRM} 600 to 800 V
- Triggering gate current, $I_{GT\ (Q1)}$ 5 to 50 mA

This is information on a product in full production. www.st.com

chanhvinh.com

1 Characteristics

Table 1. Absolute maximum ratings (T_j = 25 °C unless otherwise stated)

Symbol	Parameter			Value	Unit
$I_{T(rms)}$	On-state rms current (full sine wave)	IPAK, DPAK, TO-220AB	T_c = 110 °C	8	A
		TO-220ABIns.	T_c = 100 °C		
I_{TSM}	Non repetitive surge peak on-state current (full cycle, T_j initial = 25 °C)	F = 50 Hz	t = 20 ms	80	A
		F = 60 Hz	t = 16.7 ms	84	
I^2t	I^2t value for fusing		t_p = 10 ms	36	A^2s
dI/dt	Critical rate of rise of on-state current I_G = 2 x I_{GT}, $t_r \leq$ 100 ns	F = 120 Hz	T_j = 125 °C	50	A/µs
I_{GM}	Peak gate current	t_p = 20 µs	T_j = 125 °C	4	A
$P_{G(AV)}$	Average gate power dissipation		T_j = 125 °C	1	W
T_{stg} T_j	Storage junction temperature range Operating junction temperature range			- 40 to + 150 - 40 to + 150	°C

Table 2. Electrical characteristics (T_j = 25 °C, unless otherwise specified) Snubberless and logic level (3 quadrants)

Symbol	Test conditions	Quadrant		T8		BTA08 / BTB08				Unit
				T810	T835	TW	SW	CW	BW	
I_{GT} (1)	V_D = 12 V R_L = 30 Ω	I - II - III	MAX.	10	35	5	10	35	50	mA
V_{GT}		I - II - III	MAX.	1.3						V
V_{GD}	V_D = V_{DRM} R_L = 3.3 k Ω T_j = 125 °C	I - II - III	MIN.	0.2						V
I_H (2)	I_T = 100 mA		MAX.	15	35	10	15	35	50	mA
I_L	I_G = 1.2 I_{GT}	I - III	MAX.	25	50	10	25	50	70	mA
		II		30	60	15	30	60	80	
dV/dt (2)	V_D = 67% V_{DRM} gate open T_j = 125 °C		MIN.	40	400	20	40	400	1000	V/µs
$(dI/dt)_c$ (2)	$(dV/dt)_c$ = 0.1 V/µs T_j = 125 °C		MIN.	5.4	-	3.5	5.4	-	-	A/ms
	$(dV/dt)_c$ = 10 V/µs T_j = 125 °C			2.8	-	1.5	2.98	-	-	
	Without snubber T_j = 125 °C			-	4.5	-	-	4.5	7	

chanhvinh.com

Table 3. Standard (4 quadrants)

Symbol	Test conditions	Quadrant		BTA08 / BTB08		Unit
				C	B	
I_{GT} (1)	V_D = 12 V, R_L = 33 Ω	I - II - III IV	MAX.	25 50	50 100	mA
V_{GT}		ALL	MAX.	1.3		V
V_{GD}	$V_D = V_{DRM}$, R_L = 3.3 k Ω , T_j = 125 °X	ALL	MIN.	0.2		V
I_H (2)	I_T = 500 mA		MAX.	25	50	mA
I_L	I_G = 1.2 I_{GT}	I - III - IV	MAX.	40	50	mA
		II		80	100	
dV/dt (2)	V_D = 67% V_{DRM} gate open	T_j = 125 °C	MIN.	200	400	V/µs
$(dV/dt)_c$ (2)	(dI/dt)c = 5.3 A/ms	T_j = 125 °C	MIN.	5	10	V/µs

Table 4. Static characteristics

Symbol	Test conditions			Value	Unit
V_{TM} (1)	I_{TM} = 11 A, t_p = 380 µs	T_j = 25 °C	MAX.	1.55	V
V_{t0} (2)	Threshold voltage	T_j = 125 °C	MAX.	0.85	V
R_d (2)	Dynamic resistance	T_j = 125 °C	MAX.	50	mΩ
I_{DRM} I_{RRM}	$V_{DRM} = V_{RRM}$	T_j = 25 °C	MAX.	5	µA
		T_j = 125 °C		1	mA

1. minimum I_{GT} is guaranteed at 5% of I_{GT} max.
2. for both polarities of A2 referenced to A1.

Table 5. Thermal resistance

Symbol	Parameter			Value	Unit
$R_{th(j-c)}$	Junction to case (AC)		IPAK / D^2PAK / DPAK / TO-220AB	1.6	°C/W
			TO-220AB Insulated	2.5	
$R_{th(j-a)}$	Junction to ambient	S = 1 cm^2	D^2PAK	45	°C/W
		S = 0.5 cm^2	DPAK	70	
			TO-220AB / TO-220AB Insulated	60	
			IPAK	100	

S = Copper surface under tab.

chanhvinh.com

Figure 1. Maximum power dissipation versus RMS on-state current (full cycle)

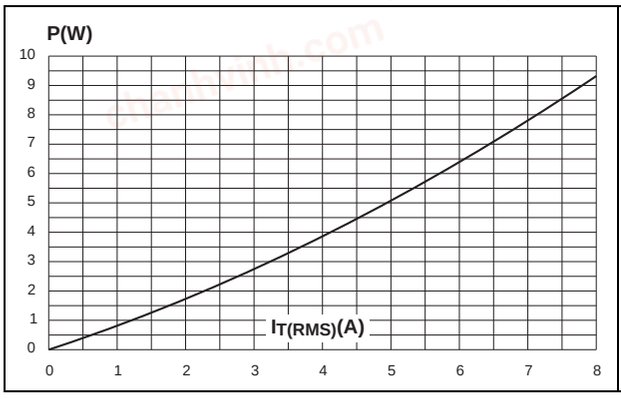

Figure 2. RMS on-state current versus case temperature (full cycle)

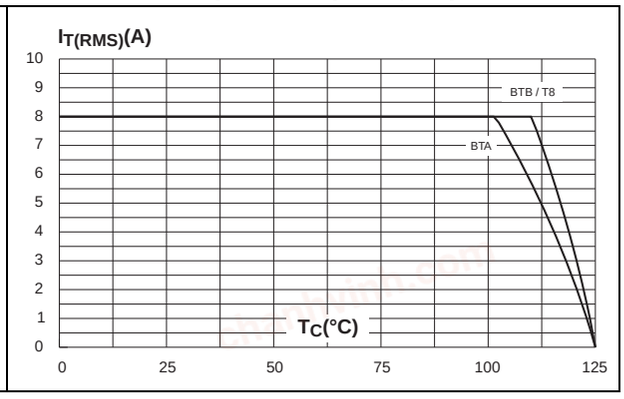

Figure 3. RMS on-state current versus ambient temperature (full cycle)

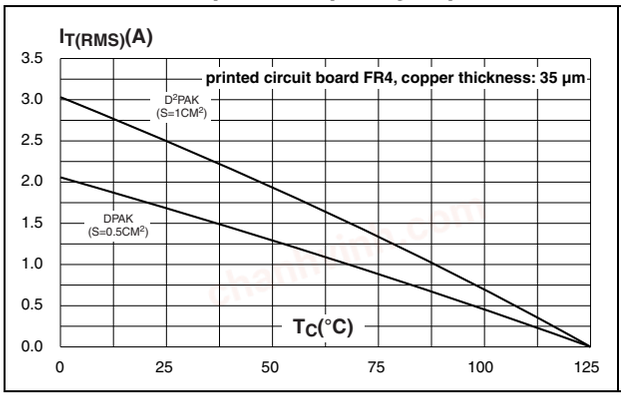

Figure 4. Relative variation of thermal impedance versus pulse duration

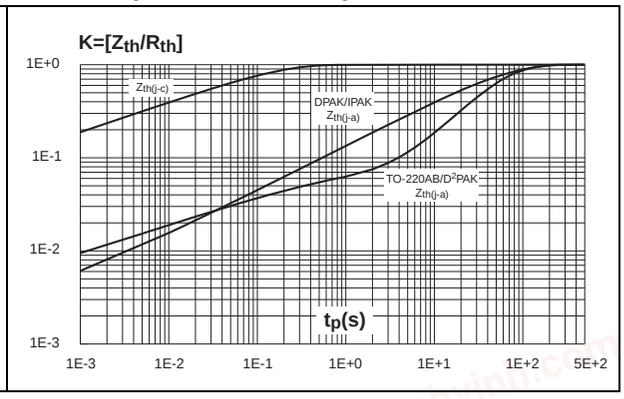

Figure 5. On-state characteristics (maximum values)

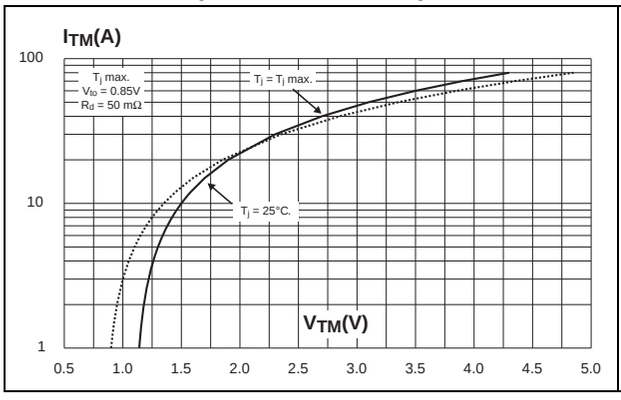

Figure 6. Surge peak on-state current versus number of cycles

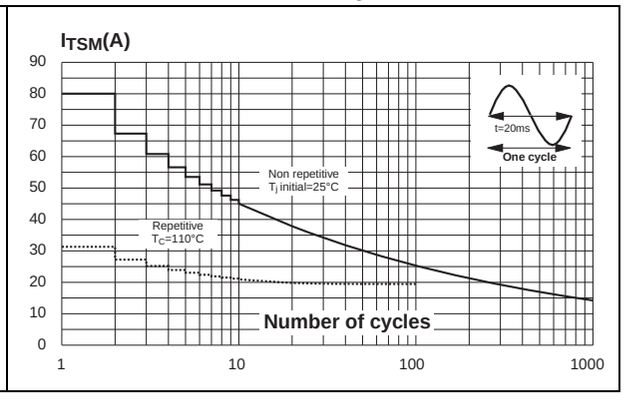

chanhvinh.com

Figure 7. Non-repetitive surge peak on-state current for a sinusoidal

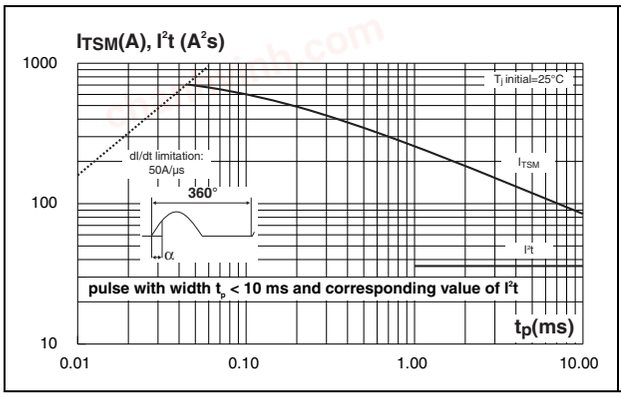

Figure 8. Relative variation of gate trigger current

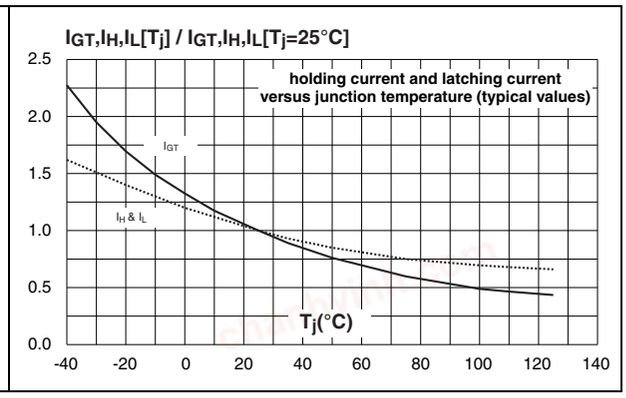

Figure 9. Relative variation of critical rate of decrease of main current versus (dV/dt)c (typical values)

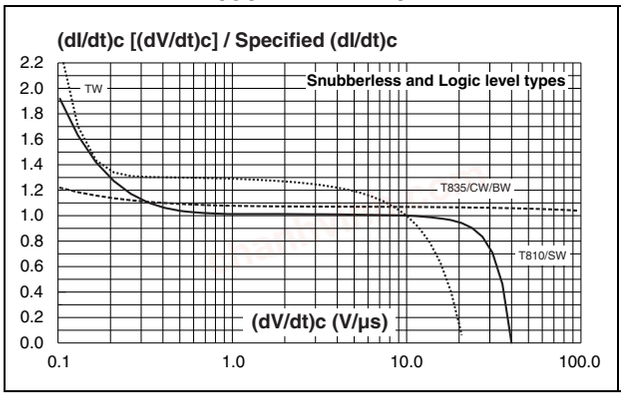

Figure 10. Relative variation of critical rate of decrease of main current versus (dV/dt)c (typical values)

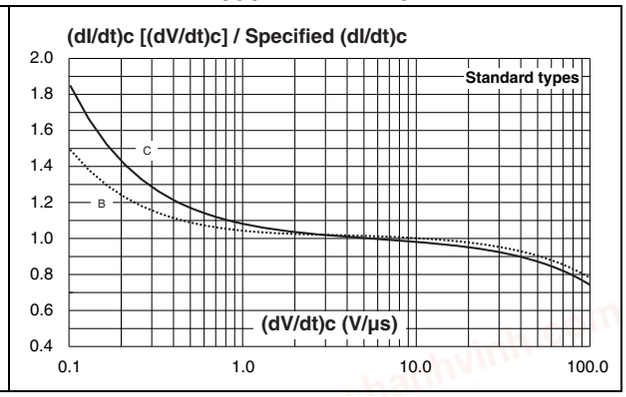

Figure 11. Relative variation of critical rate of decrease of main current versus junction temperature

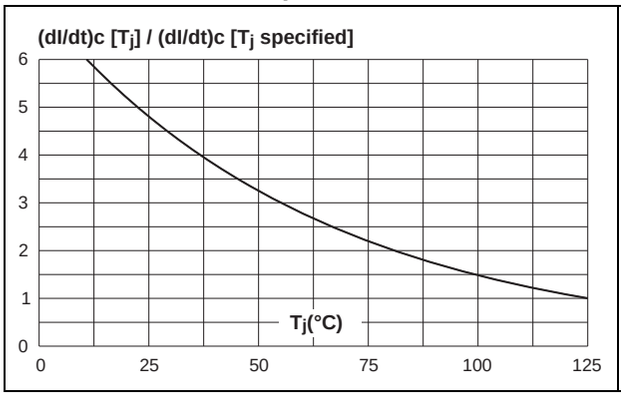

Figure 12. DPAK and D²PAK thermal resistance junction to ambient versus copper surface under tab

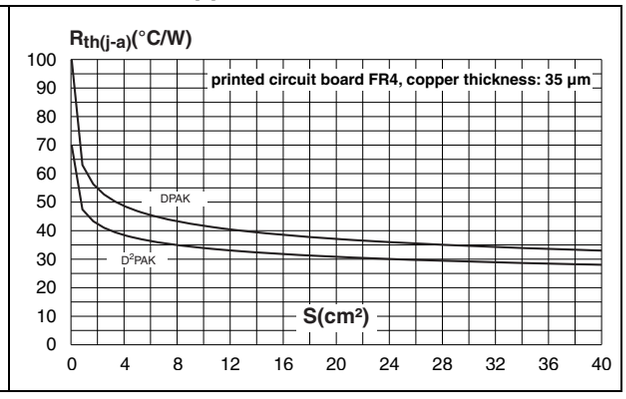

chanhvinh.com

2 Package information

- Epoxy meets UL94, V0
- Lead-free package
- Recommended torque: 0.4 to 0.6 N·m

In order to meet environmental requirements, ST offers these devices in different grades of ECOPACK® packages, depending on their level of environmental compliance. ECOPACK® specifications, grade definitions and product status are available at: *www.st.com*. ECOPACK® is an ST trademark.

Figure 13. DPAK dimension definitions

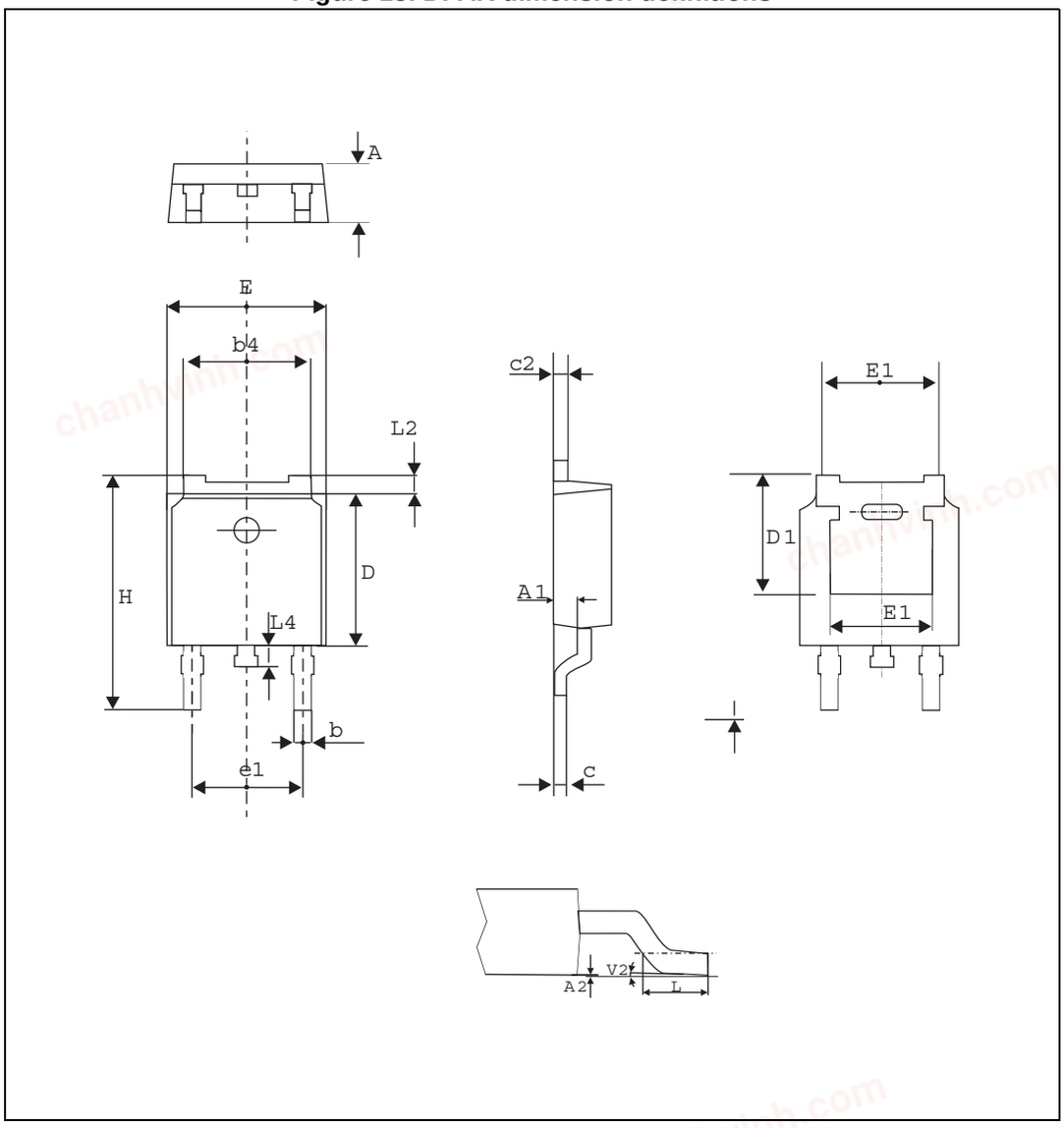

Note: This package drawing may slightly differ from the physical package. However, all the specified dimensions are guaranteed.

chanhvinh.com

Table 6. DPAK dimension values

Ref.	Dimensions					
	Millimeters			Inches		
	Min.	Typ.	Max.	Min.	Typ.	Max.
A	2.18		2.40	0.086		0.094
A1	0.90		1.10	0.035		0.043
A2	0.03		0.23	0.001		0.009
b	0.64		0.90	0.025		0.035
b4	4.95		5.46	0.195		0.215
c	0.46		0.61	0.018		0.024
c2	0.46		0.60	0.018		0.023
D	5.97		6.22	0.235		0.244
D1	5.10			0.201		
E	6.35		6.73	0.250		0.264
E1		4.32			0.170	
e1	4.40		4.70	0.173		0.185
H	9.35		10.40	0.368		0.409
L	1.00		1.78	0.039		0.070
L2			1.27			0.05
L4	0.60		1.02	0.023		0.040
V2	0°		8°	0°		8°

Figure 14. Footprint (dimensions in mm)

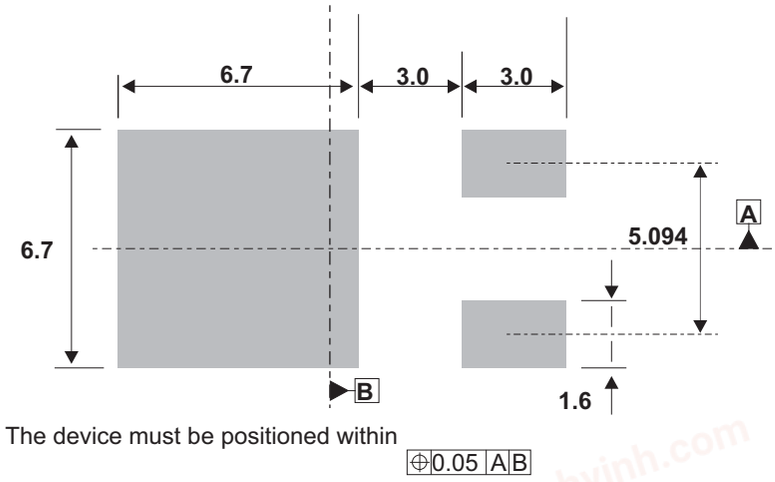

chanhvinh.com

Figure 15. IPAK dimension definitions

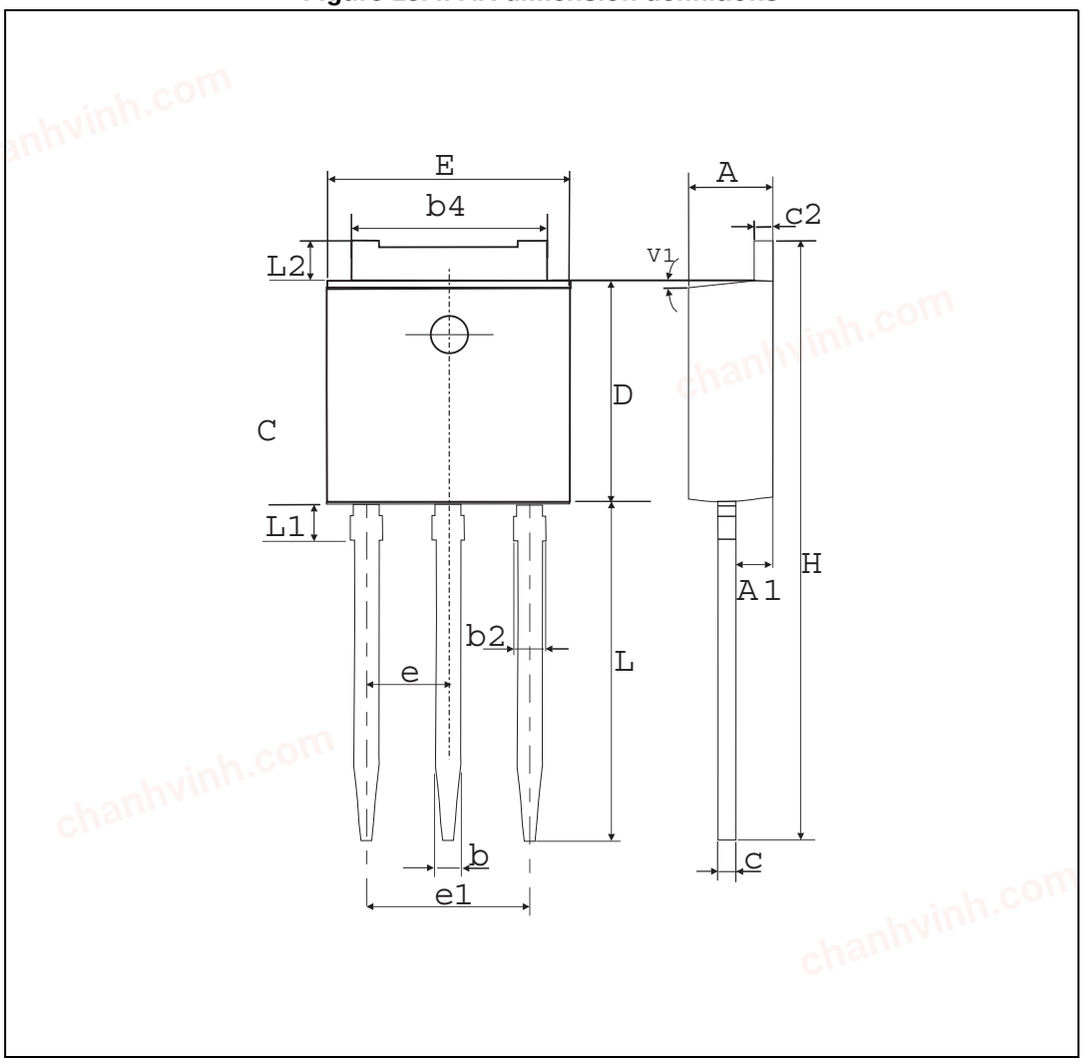

Note: This package drawing may slightly differ from the physical package. However, all the specified dimensions are guaranteed.

chanhvinh.com

Table 7. IPAK dimension values

Ref.	Dimensions					
	Millimeters			Inches		
	Min.	Typ.	Max.	Min.	Typ.	Max.
A	2.20		2.40	0.086		0.094
A1	0.90		1.10	0.035		0.043
b	0.64		0.90	0.025		0.035
b2			0.95			0.037
b4	5.20		5.43	0.204		0.213
c	0.45		0.60	0.017		0.023
c2	0.46		0.60	0.018		0.023
D	6		6.20	0.236		0.244
E	6.40		6.70	0.252		0.263
e		2.28			0.090	
e1	4.40		4.60	0.173		0.181
H		16.10			0.634	
L	9		9.60	0.354		0.377
L1	0.8		1.20	0.031		0.047
L2		0.80	1.25		0.031	0.049
V1		10°			10°	

chanhvinh.com

Figure 16. TO-220AB (NIns. & Ins. 20-up) dimension definitions

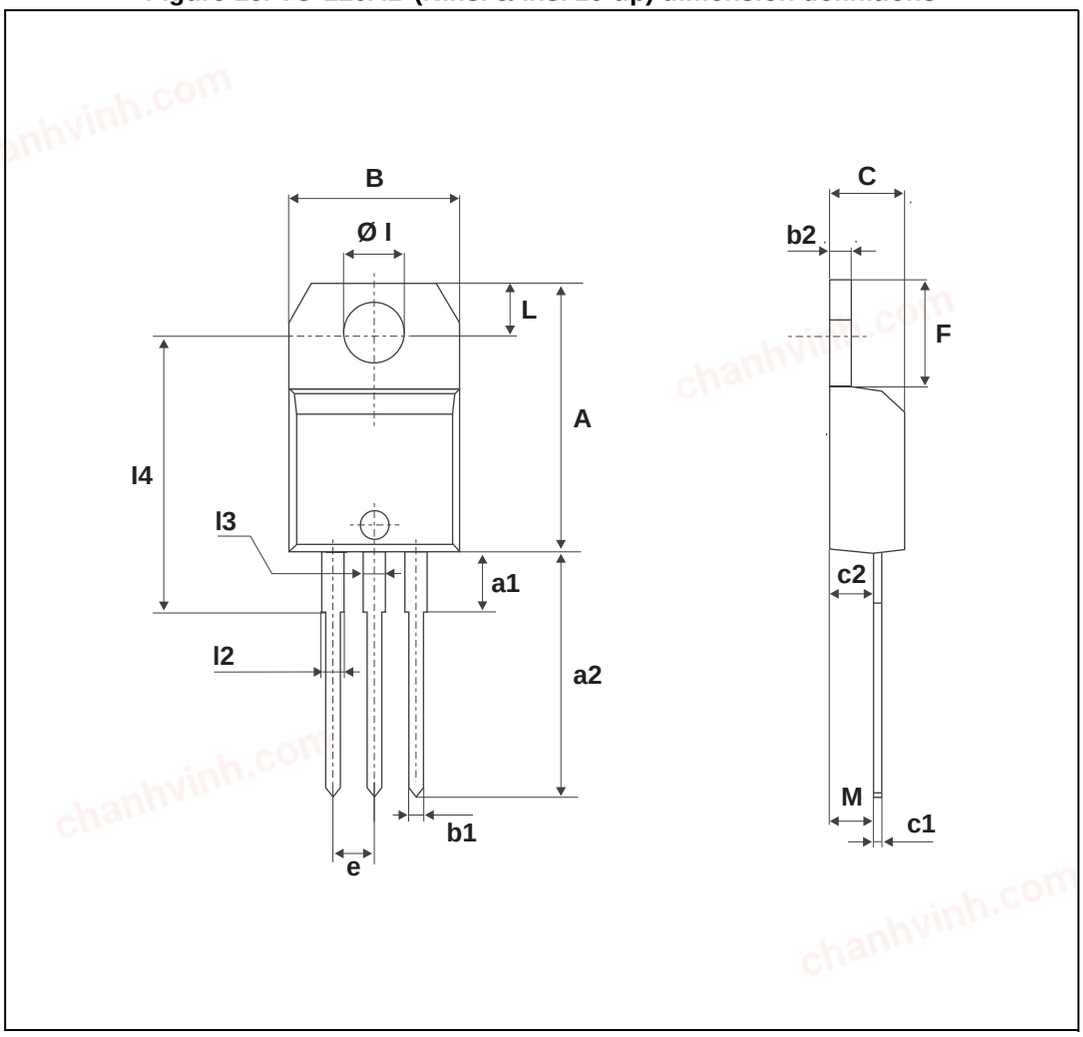

chanhvinh.com

Table 8. TO-220AB (NIns. & Ins. 20-up) dimension values

Ref.	Dimensions					
	Millimeters			Inches		
	Min.	Typ.	Max.	Min.	Typ.	Max.
A	15.20		15.90	0.598		0.625
a1		3.75			0.147	
a2	13.00		14.00	0.511		0.551
B	10.00		10.40	0.393		0.409
b1	0.61		0.88	0.024		0.034
b2	1.23		1.32	0.048		0.051
C	4.40		4.60	0.173		0.181
c1	0.49		0.70	0.019		0.027
c2	2.40		2.72	0.094		0.107
e	2.40		2.70	0.094		0.106
F	6.20		6.60	0.244		0.259
ØI	3.75		3.85	0.147		0.151
l4	15.80	16.40	16.80	0.622	0.646	0.661
L	2.65		2.95	0.104		0.116
l2	1.14		1.70	0.044		0.066
l3	1.14		1.70	0.044		0.066
M		2.60			0.102	

chanhvinh.com

Figure 17. D^{2}PAK dimension definitions

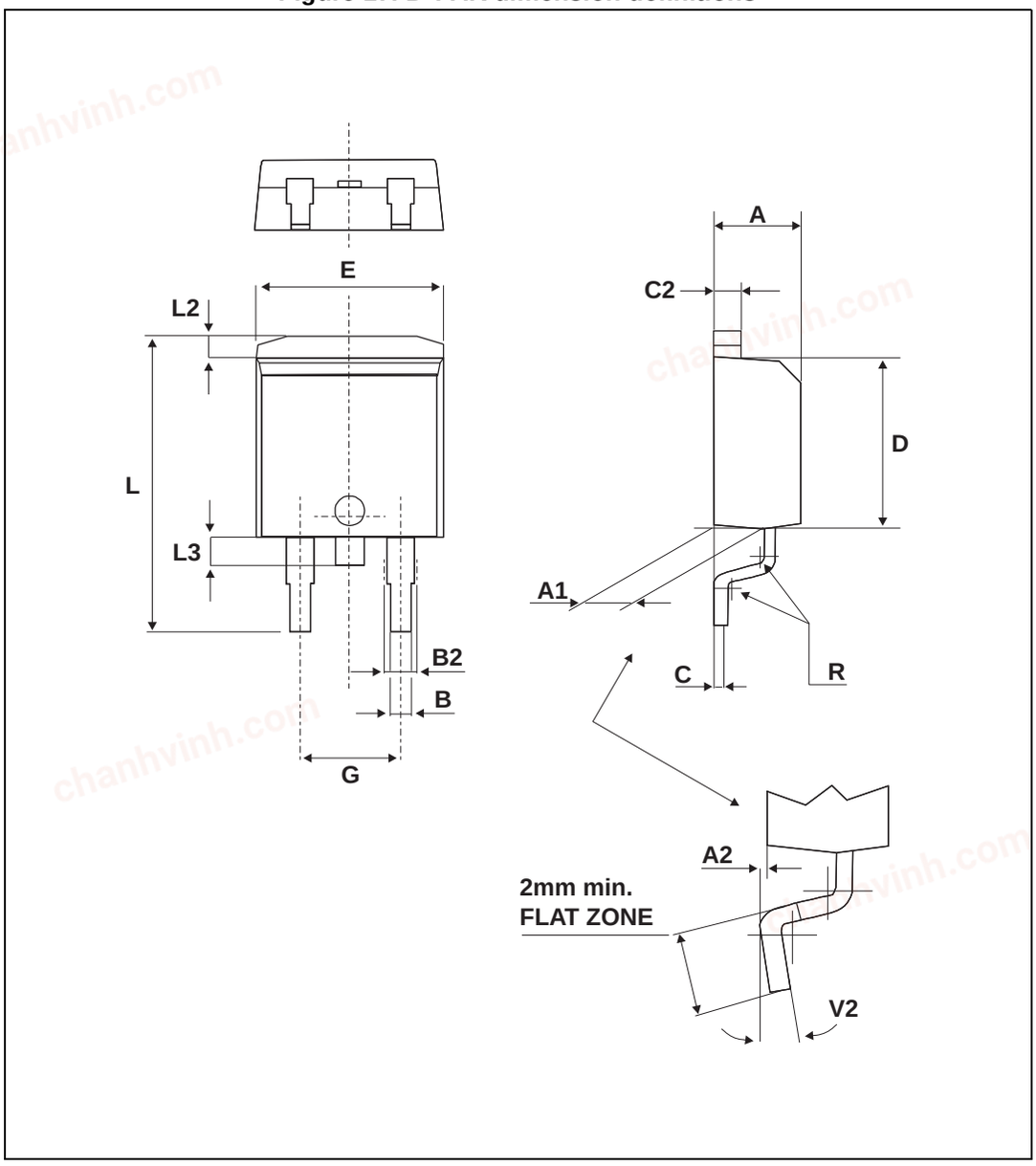

chanhvinh.com

Table 9. D²PAK dimension values

Ref.	Dimensions					
	Millimeters			Inches		
	Min.	Typ.	Max.	Min.	Typ.	Max.
A	4.30		4.60	0.169		0.181
A1	2.49		2.69	0.098		0.106
A2	0.03		0.23	0.001		0.009
B	0.70		0.93	0.027		0.037
B2	1.25	1.40		0.048	0.055	
C	0.45		0.60	0.017		0.024
C2	1.21		1.36	0.047		0.054
D	8.95		9.35	0.352		0.368
E	10.00		10.28	0.393		0.405
G	4.88		5.28	0.192		0.208
L	15.00		15.85	0.590		0.624
L2	1.27		1.40	0.050		0.055
L3	1.40		1.75	0.055		0.069
R	0.40			0.016		
V2	0°		8°	0°		8°

Figure 18. Footprint (dimensions in mm)

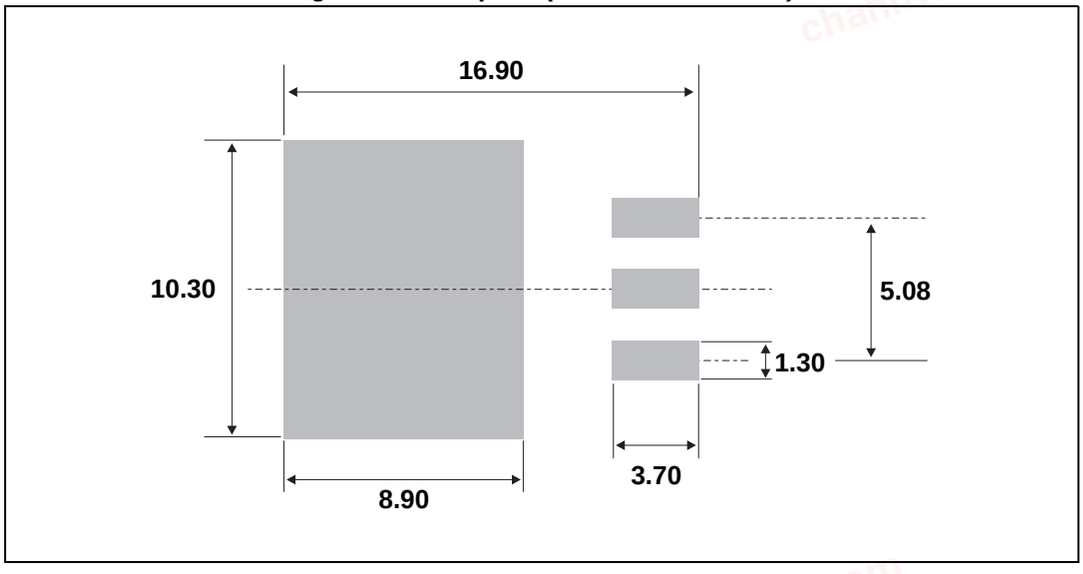

chanhvinh.com

3 Ordering information

Figure 19. Ordering information scheme (BTA08 and BTB08 series)

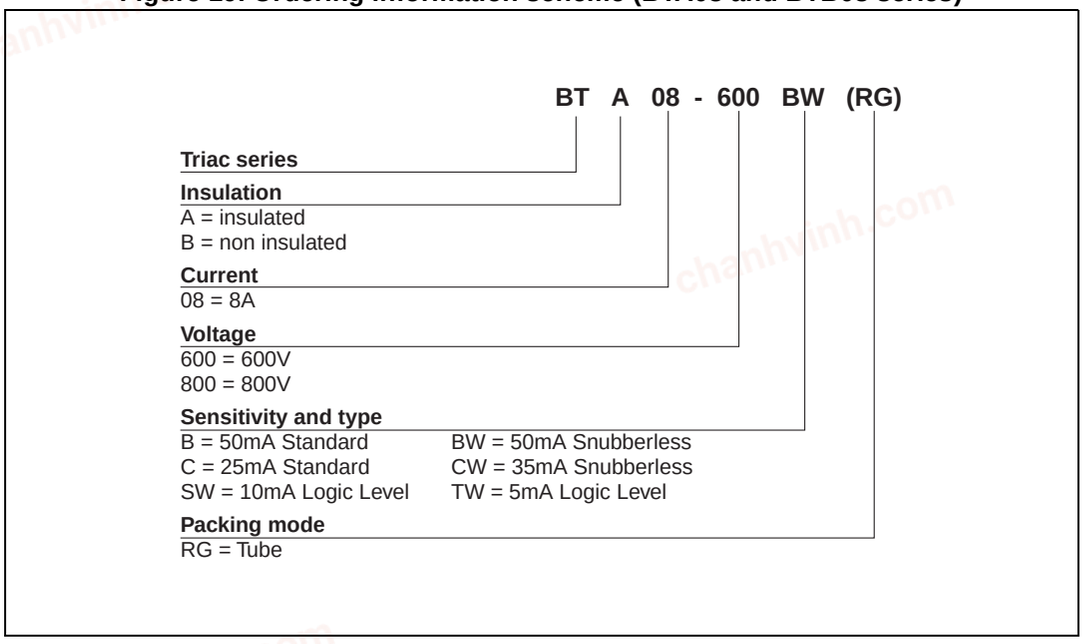

Figure 20. Ordering information scheme (T8 series)

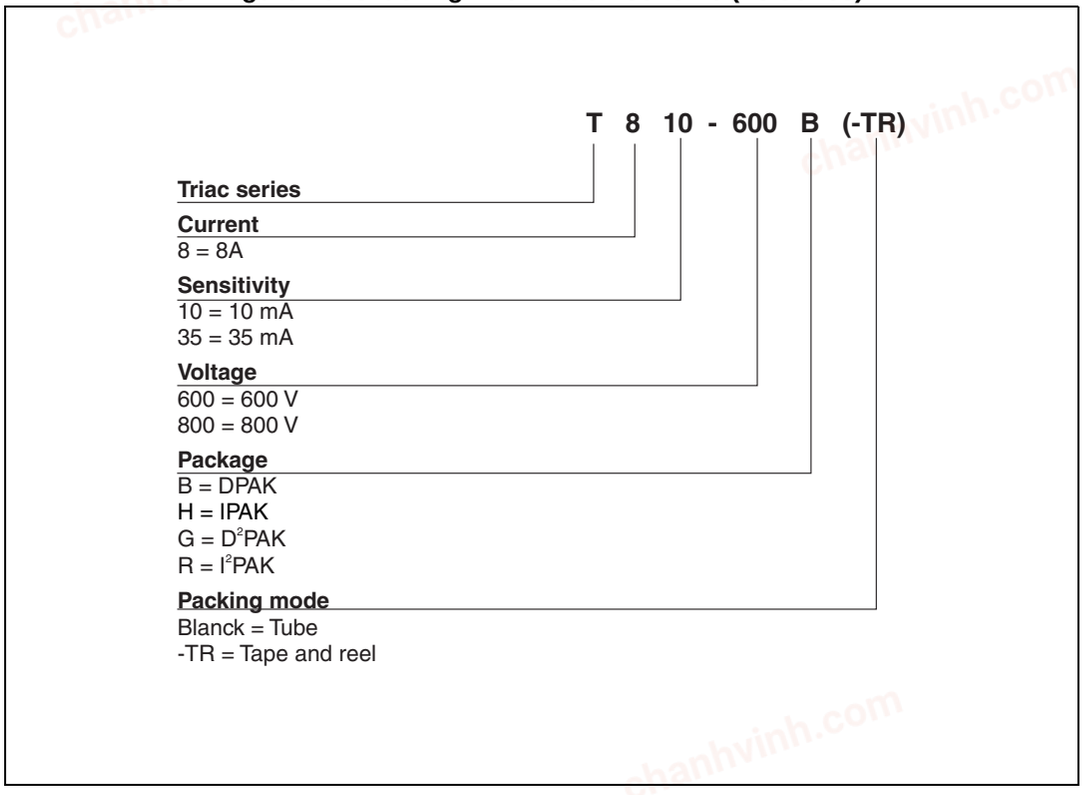

chanhvinh.com

Table 10. Product selector

Part Number	Voltage (xxx)		Sensitivity	Type	Package
	600 V	800 V			
BTA/BTB08-xxxB	X	X	50 mA	Standard	TO-220AB
BTA/BTB08-xxxBW	X	X	50 mA	Snubberless	TO-220AB
BTA/BTB08-xxxC	X	X	25 mA	Standard	TO-220AB
BTA/BTB08-xxxCW	X	X	35 mA	Snubberless	TO-220AB
BTA/BTB08-xxxSW	X	X	10 mA	Logic level	TO-220AB
BTA/BTB08-xxxTW	X	X	5 mA	Logic Level	TO-220AB
T810-xxxG	X	X	10 mA	Logic Level	D^2PAK
T810-xxxH	X	X	10 mA	Logic Level	IPAK
T835-xxxB	X	X	35 mA	Snubberless	DPAK
T835-xxxG	X	X	35 mA	Snubberless	D^2PAK
T835-xxxH	X	X	35 mA	Snubberless	IPAK

BTB: non insulated TO-220AB package

xxx = voltage, y (y) = sensitivity, z = type

Table 11. Ordering information

Order code	Marking	Package	Weight	Base qty	Delivery mode
T810-600G	T810-600	D^2PAK	1.5 g	50	Tube
T835-600G	T835-600				
T810-800G	T810-800				
T835-800G	T835-800				
T810-600G-TR	T810-600				Tape and reel
T835-600G-TR	T835-600				
T810-800G-TR	T810-800				
T835-800G-TR	T835-800				
T835-600B	T835-600	DPAK	0.3 g	75	Tube
T835-800B	T835-800				
T810-600H	T810-600	IPAK	0.4 g	75	Tube
T835-600H	T835-600				
T810-800H	T810-800				
T835-800H	T835-800				

chanhvinh.com

chanhvinh.com

Table 11. Ordering information

Order code	Marking	Package	Weight	Base qty	Delivery mode
BTA08-800SWRG	BTA08-800SW	TO-220AB	2.3 g	50 g	Tube
BTB08-600SWRG	BTB08-600SW				
BTB08-800SWRG	BTB08-800SW				
BTA08-600SWRG	BTA08-600SW				
BTA08-800CRG	BTA08-800C				
BTB08-600CRG	BTB08-600C				
BTB08-800CRG	BTB08-800C				
BTA08-600CRG	BTA08-600C				
BTA08-800CWRG	BTA08-800CW				
BTB08-600CWRG	BTB08-600CW				
BTB08-800CWRG	BTB08-800CW				
BTA08-600CWRG	BTA08-600CW				
BTA08-800TWRG	BTA08-800TW				
BTB08-600TWRG	BTB08-600TW				
BTB08-800TWRG	BTB08-800TW				
BTA08-600TWRG	BTA08-600TW				
BTA08-800BRG	BTA08-800B				
BTA08-800BWRG	BTA08-800BW				
BTB08-600BRG	BTB08-600B				
BTB08-600BWRG	BTB08-600BW				
BTB08-800BRG	BTB08-800B	TO-220AB	2.3 g	50	Tube
BTB08-800BWRG	BTB08-800BW				
BTA08-600BRG	BTA08-600B				
BTA08-600BWRG	BTA08-600BW				
T835-600B	T835-600	DPAK	0.3 g	2500	Tape and reel
T835-800B	T835-800				

chanhvinh.com

4 Revision history

Table 12. Document revision history

Date	Revision	Changes
Apr-2002	5A	Last update.
13-Feb-2006	6	TO-220AB delivery mode changed from bulk to tube. ECOPACK statement added.
10-Mar-2010	7	Updated ECOPACK statement and *Figure 20*
02-Jun-2014	8	Updated DPAK and IPAK package information and reformatted to current standard.

chanhvinh.com

Please Read Carefully:

Information in this document is provided solely in connection with ST products. STMicroelectronics NV and its subsidiaries (“ST”) reserve the right to make changes, corrections, modifications or improvements, to this document, and the products and services described herein at any time, without notice.

All ST products are sold pursuant to ST’s terms and conditions of sale.

Purchasers are solely responsible for the choice, selection and use of the ST products and services described herein, and ST assumes no liability whatsoever relating to the choice, selection or use of the ST products and services described herein.

No license, express or implied, by estoppel or otherwise, to any intellectual property rights is granted under this document. If any part of this document refers to any third party products or services it shall not be deemed a license grant by ST for the use of such third party products or services, or any intellectual property contained therein or considered as a warranty covering the use in any manner whatsoever of such third party products or services or any intellectual property contained therein.

UNLESS OTHERWISE SET FORTH IN ST’S TERMS AND CONDITIONS OF SALE ST DISCLAIMS ANY EXPRESS OR IMPLIED WARRANTY WITH RESPECT TO THE USE AND/OR SALE OF ST PRODUCTS INCLUDING WITHOUT LIMITATION IMPLIED WARRANTIES OF MERCHANTABILITY, FITNESS FOR A PARTICULAR PURPOSE (AND THEIR EQUIVALENTS UNDER THE LAWS OF ANY JURISDICTION), OR INFRINGEMENT OF ANY PATENT, COPYRIGHT OR OTHER INTELLECTUAL PROPERTY RIGHT.

ST PRODUCTS ARE NOT DESIGNED OR AUTHORIZED FOR USE IN: (A) SAFETY CRITICAL APPLICATIONS SUCH AS LIFE SUPPORTING, ACTIVE IMPLANTED DEVICES OR SYSTEMS WITH PRODUCT FUNCTIONAL SAFETY REQUIREMENTS; (B) AERONAUTIC APPLICATIONS; (C) AUTOMOTIVE APPLICATIONS OR ENVIRONMENTS, AND/OR (D) AEROSPACE APPLICATIONS OR ENVIRONMENTS. WHERE ST PRODUCTS ARE NOT DESIGNED FOR SUCH USE, THE PURCHASER SHALL USE PRODUCTS AT PURCHASER’S SOLE RISK, EVEN IF ST HAS BEEN INFORMED IN WRITING OF SUCH USAGE, UNLESS A PRODUCT IS EXPRESSLY DESIGNATED BY ST AS BEING INTENDED FOR “AUTOMOTIVE, AUTOMOTIVE SAFETY OR MEDICAL” INDUSTRY DOMAINS ACCORDING TO ST PRODUCT DESIGN SPECIFICATIONS. PRODUCTS FORMALLY ESCC, QML OR JAN QUALIFIED ARE DEEMED SUITABLE FOR USE IN AEROSPACE BY THE CORRESPONDING GOVERNMENTAL AGENCY.

Resale of ST products with provisions different from the statements and/or technical features set forth in this document shall immediately void any warranty granted by ST for the ST product or service described herein and shall not create or extend in any manner whatsoever, any liability of ST.

ST and the ST logo are trademarks or registered trademarks of ST in various countries.
Information in this document supersedes and replaces all information previously supplied.
The ST logo is a registered trademark of STMicroelectronics. All other names are the property of their respective owners.

© 2014 STMicroelectronics - All rights reserved

STMicroelectronics group of companies

Australia - Belgium - Brazil - Canada - China - Czech Republic - Finland - France - Germany - Hong Kong - India - Israel - Italy - Japan - Malaysia - Malta - Morocco - Philippines - Singapore - Spain - Sweden - Switzerland - United Kingdom - United States of America

www.st.com