chanhvinh.com

M95128-W M95128-R M95128-DF

128-Kbit serial SPI bus EEPROM with high-speed clock

Datasheet – production data

Features

- Compatible with the Serial Peripheral Interface (SPI) bus
- Memory array
  - 128 Kb (16 Kbytes) of EEPROM
  - Page size: 64 bytes
- Write
  - Byte Write within 5 ms
  - Page Write within 5 ms
- Additional Write lockable page (Identification page)
- Write Protect: quarter, half or whole memory array
- High-speed clock: 20 MHz
- Single supply voltage:
  - 2.5 V to 5.5 V for M95128-W
  - 1.8 V to 5.5 V for M95128-R
  - 1.7 V to 5.5 V for M95128-DF
- Operating temperature range: from -40°C up to +85°C
- Enhanced ESD protection
- More than 4 million Write cycles
- More than 200-year data retention
- Packages
  - RoHS compliant and halogen-free (ECOPACK2®)

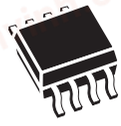

SO8 (MN)
150 mil width



TSSOP8 (DW)
169 mil width



UFDFPN8 (MC)
2 x 3 mm (MLP8)



WLCSP (CS)

This is information on a product in full production. www.st.com

chanhvinh.com

Contents

1 Description 6

2 Memory organization 8

3 Signal description 9

3.1 Serial Data Output (Q) 9

3.2 Serial Data Input (D) 9

3.3 Serial Clock (C) 9

3.4 Chip Select ($\overline{S}$) 9

3.5 Hold ($\overline{HOLD}$) 9

3.6 Write Protect ($\overline{W}$) 10

3.7 V_{CC} supply voltage 10

3.8 V_{SS} ground 10

4 Connecting to the SPI bus 11

4.1 SPI modes 12

5 Operating features 13

5.1 Supply voltage (V_{CC}) 13

5.1.1 Operating supply voltage V_{CC} 13

5.1.2 Device reset 13

5.1.3 Power-up conditions 13

5.1.4 Power-down 14

5.2 Active Power and Standby Power modes 14

5.3 Hold condition 14

5.4 Status Register 15

5.5 Data protection and protocol control 15

6 Instructions 16

6.1 Write Enable (WREN) 17

6.2 Write Disable (WRDI) 17

6.3 Read Status Register (RDSR) 18

6.3.1 WIP bit 18

chanhvinh.com

6.3.2 WEL bit . . . 19
6.3.3 BP1, BP0 bits . . . 19
6.3.4 SRWD bit . . . 19
6.4 Write Status Register (WRSR) . . . 20
6.5 Read from Memory Array (READ) . . . 22
6.6 Write to Memory Array (WRITE) . . . 22
6.6.1 Cycling with Error Correction Code (ECC) . . . 25
6.7 Read Identification Page (available only in M95128-D devices) . . . 26
6.8 Write Identification Page (available only in M95128-D devices) . . . 27
6.9 Read Lock Status (available only in M95128-D devices) . . . 28
6.10 Lock ID (available only in M95128-D devices) . . . 29

7 Power-up and delivery state . . . 30
7.1 Power-up state . . . 30
7.2 Initial delivery state . . . 30

8 Maximum rating . . . 31

9 DC and AC parameters . . . 32

10 Package mechanical data . . . 42

11 Part numbering . . . 47

12 Revision history . . . 48

chanhvinh.com

List of tables

Table 1. Signal names . . . 6
Table 2. Write-protected block size . . . 15
Table 3. Instruction set . . . 16
Table 4. M95128-D instruction set . . . 16
Table 5. Address range bits . . . 16
Table 6. Status Register format . . . 19
Table 7. Protection modes . . . 21
Table 8. Absolute maximum ratings . . . 31
Table 9. Operating conditions (M95128-W, device grade 6) . . . 32
Table 10. Operating conditions (M95128-R, device grade 6) . . . 32
Table 11. Operating conditions (M95128-DF, device grade 6) . . . 32
Table 12. AC measurement conditions . . . 32
Table 13. Capacitance . . . 33
Table 14. Cycling performance by groups of four bytes . . . 33
Table 15. Memory cell data retention . . . 33
Table 16. DC characteristics (M95128-W, device grade 6) . . . 34
Table 17. DC characteristics (M95128-R, device grade 6) . . . 35
Table 18. DC characteristics (M95128-DF, device grade 6) . . . 36
Table 19. AC characteristics (M95128-W, device grade 6) . . . 37
Table 20. AC characteristics (M95128-R, device grade 6) . . . 38
Table 21. AC characteristics (M95128-DF, device grade 6) . . . 39
Table 22. SO8N – 8-lead plastic small outline, 150 mils body width, mechanical data . . . 42
Table 23. TSSOP8 – 8-lead thin shrink small outline, package mechanical data . . . 43
Table 24. UFDFPN8 (MLP8) – 8-lead ultra thin fine pitch dual flat package no lead 2 x 3 mm, data . . . 44
Table 25. M95128-DFCS6TP/K, WLCSP 8-bump wafer-level chip scale package mechanical data . . . 46
Table 26. Ordering information scheme . . . 47
Table 27. Document revision history . . . 48

chanhvinh.com

List of figures

Figure 1. Logic diagram . . . 6
Figure 2. 8-pin package connections (top view) . . . 7
Figure 3. WLCSP connections (top view, marking side, with balls on the underside) . . . 7
Figure 4. Block diagram . . . 8
Figure 5. Bus master and memory devices on the SPI bus . . . 11
Figure 6. SPI modes supported . . . 12
Figure 7. Hold condition activation . . . 14
Figure 8. Write Enable (WREN) sequence . . . 17
Figure 9. Write Disable (WRDI) sequence . . . 18
Figure 10. Read Status Register (RDSR) sequence . . . 18
Figure 11. Write Status Register (WRSR) sequence . . . 20
Figure 12. Read from Memory Array (READ) sequence . . . 22
Figure 13. Byte Write (WRITE) sequence . . . 23
Figure 14. Page Write (WRITE) sequence . . . 24
Figure 15. Read Identification Page sequence . . . 26
Figure 16. Write identification page sequence . . . 27
Figure 17. Read Lock Status sequence . . . 28
Figure 18. Lock ID sequence . . . 29
Figure 19. AC measurement I/O waveform . . . 32
Figure 20. Serial input timing . . . 40
Figure 21. Hold timing . . . 40
Figure 22. Serial output timing . . . 41
Figure 23. SO8N – 8-lead plastic small outline, 150 mils body width, package outline . . . 42
Figure 24. TSSOP8 – 8-lead thin shrink small outline, package outline . . . 43
Figure 25. UFDFPN8 (MLP8) – 8-lead ultra thin fine pitch dual flat no lead, package outline . . . 44
Figure 26. M95128-DFCS6TP/K, WLCSP 8-bump wafer-level chip scale package outline . . . 45

chanhvinh.com

1 Description

The M95128 devices are Electrically Erasable PROgrammable Memories (EEPROMs) organized as 16384 x 8 bits, accessed through the SPI bus.

The M95128-W can operate with a supply voltage from 2.5 V to 5.5 V, the M95128-R can operate with a supply voltage from 1.8 V to 5.5 V, and the M95128-DF can operate with a supply voltage from 1.7 V to 5.5 V, over an ambient temperature range of -40 °C / +85 °C.

The M95128-DF offers an additional page, named the Identification Page (64 bytes). The Identification Page can be used to store sensitive application parameters which can be (later) permanently locked in Read-only mode.

Figure 1. Logic diagram

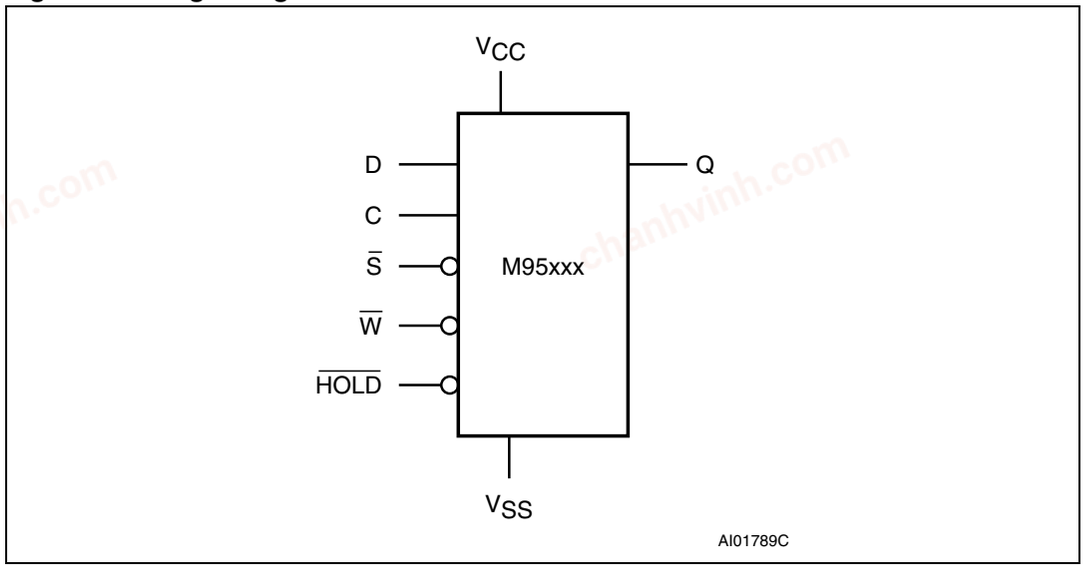

The SPI bus signals are C, D and Q, as shown in *Figure 1* and *Table 1*. The device is selected when Chip Select ($\overline{S}$) is driven low. Communications with the device can be interrupted when the $\overline{HOLD}$ is driven low.

Table 1. Signal names

Signal name	Function	Direction
C	Serial Clock	Input
D	Serial Data Input	Input
Q	Serial Data Output	Output
$\overline{S}$	Chip Select	Input
$\overline{W}$	Write Protect	Input
$\overline{HOLD}$	Hold	Input
V_{CC}	Supply voltage	
V_{SS}	Ground	

chanhvinh.com

Figure 2. 8-pin package connections (top view)

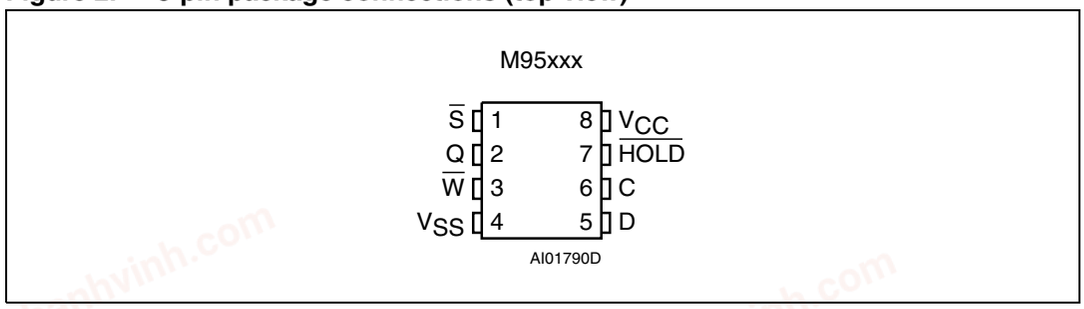

1. See *Section 10: Package mechanical data* section for package dimensions, and how to identify pin 1.

Figure 3. WLCSP connections (top view, marking side, with balls on the underside)

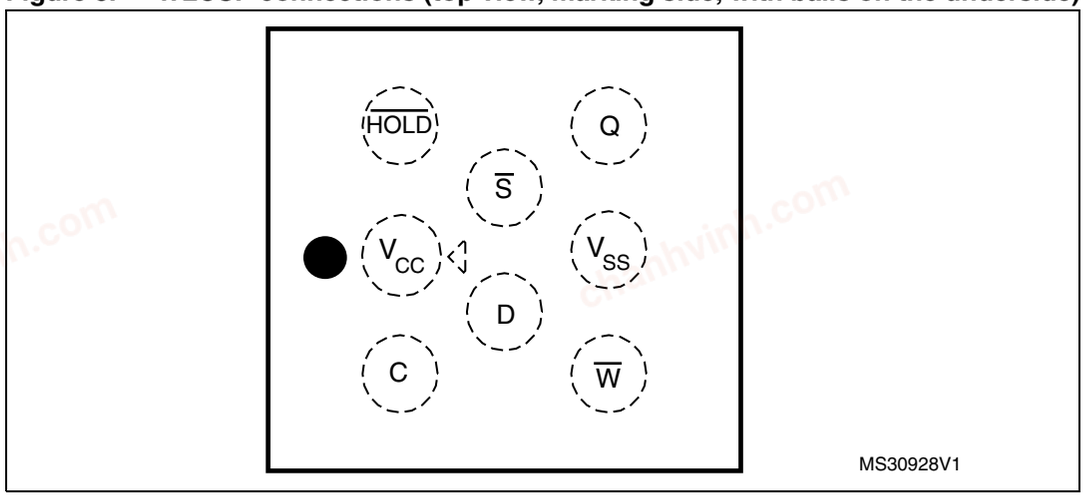

Caution: As EEPROM cells lose their charge (and so their binary value) when exposed to ultra violet (UV) light, EEPROM dice delivered in wafer form or in WLCSP package by STMicroelectronics must never be exposed to UV light.

chanhvinh.com

2 Memory organization

The memory is organized as shown in the following figure.

Figure 4. Block diagram

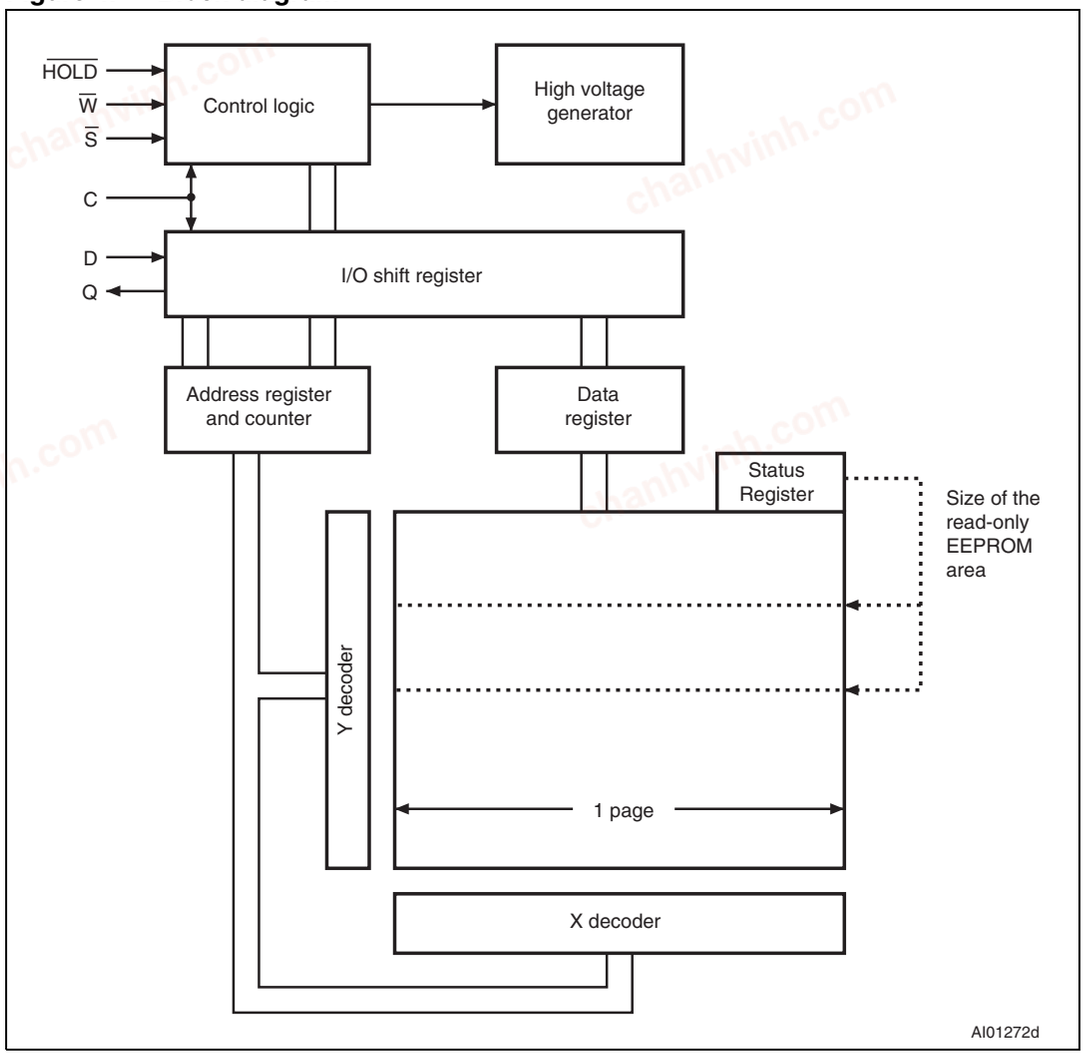

chanhvinh.com

3 Signal description

During all operations, V_{CC} must be held stable and within the specified valid range: V_{CC}(min) to V_{CC}(max).

All of the input and output signals must be held high or low (according to voltages of V_{IH}, V_{OH}, V_{IL} or V_{OL}, as specified in *Section 9: DC and AC parameters*). These signals are described next.

3.1 Serial Data Output (Q)

This output signal is used to transfer data serially out of the device. Data is shifted out on the falling edge of Serial Clock (C).

3.2 Serial Data Input (D)

This input signal is used to transfer data serially into the device. It receives instructions, addresses, and the data to be written. Values are latched on the rising edge of Serial Clock (C).

3.3 Serial Clock (C)

This input signal provides the timing of the serial interface. Instructions, addresses, or data present at Serial Data Input (D) are latched on the rising edge of Serial Clock (C). Data on Serial Data Output (Q) change from the falling edge of Serial Clock (C).

3.4 Chip Select ($\overline{S}$)

When this input signal is high, the device is deselected and Serial Data Output (Q) is at high impedance. The device is in the Standby Power mode, unless an internal Write cycle is in progress. Driving Chip Select ($\overline{S}$) low selects the device, placing it in the Active Power mode.

After power-up, a falling edge on Chip Select ($\overline{S}$) is required prior to the start of any instruction.

3.5 Hold ($\overline{HOLD}$)

The Hold ($\overline{HOLD}$) signal is used to pause any serial communications with the device without deselecting the device.

During the Hold condition, the Serial Data Output (Q) is high impedance, and Serial Data Input (D) and Serial Clock (C) are Don't Care.

To start the Hold condition, the device must be selected, with Chip Select ($\overline{S}$) driven low.

chanhvinh.com

3.6 Write Protect ($\overline{W}$)

The main purpose of this input signal is to freeze the size of the area of memory that is protected against Write instructions (as specified by the values in the BP1 and BP0 bits of the Status Register).

This pin must be driven either high or low, and must be stable during all Write instructions.

3.7 V_{CC} supply voltage

V_{CC} is the supply voltage.

3.8 V_{SS} ground

V_{SS} is the reference for all signals, including the V_{CC} supply voltage.

chanhvinh.com

4 Connecting to the SPI bus

All instructions, addresses and input data bytes are shifted in to the device, most significant bit first. The Serial Data Input (D) is sampled on the first rising edge of the Serial Clock (C) after Chip Select ($\overline{S}$) goes low.

All output data bytes are shifted out of the device, most significant bit first. The Serial Data Output (Q) is latched on the first falling edge of the Serial Clock (C) after the instruction (such as the Read from Memory Array and Read Status Register instructions) have been clocked into the device.

Figure 5. Bus master and memory devices on the SPI bus

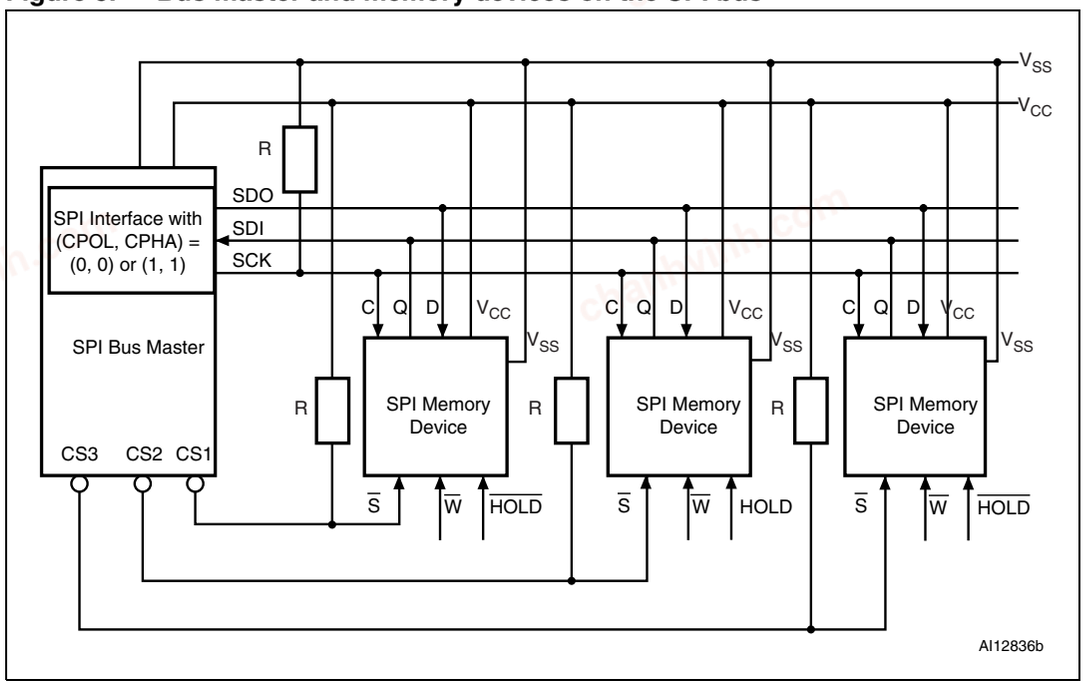

1. The Write Protect ($\overline{W}$) and Hold ($\overline{HOLD}$) signals should be driven, high or low as appropriate.

Figure 5 shows an example of three memory devices connected to an SPI bus master. Only one memory device is selected at a time, so only one memory device drives the Serial Data Output (Q) line at a time. The other memory devices are high impedance.

The pull-up resistor R (represented in *Figure 5*) ensures that a device is not selected if the Bus Master leaves the $\overline{S}$ line in the high impedance state.

In applications where the Bus Master may leave all SPI bus lines in high impedance at the same time (for example, if the Bus Master is reset during the transmission of an instruction), the clock line (C) must be connected to an external pull-down resistor so that, if all inputs/outputs become high impedance, the C line is pulled low (while the $\overline{S}$ line is pulled high): this ensures that $\overline{S}$ and C do not become high at the same time, and so, that the t_{SHCH} requirement is met. The typical value of R is 100 kΩ.

chanhvinh.com

4.1 SPI modes

These devices can be driven by a microcontroller with its SPI peripheral running in either of the following two modes:

- CPOL=0, CPHA=0
- CPOL=1, CPHA=1

For these two modes, input data is latched in on the rising edge of Serial Clock (C), and output data is available from the falling edge of Serial Clock (C).

The difference between the two modes, as shown in *Figure 6*, is the clock polarity when the bus master is in Stand-by mode and not transferring data:

- C remains at 0 for (CPOL=0, CPHA=0)
- C remains at 1 for (CPOL=1, CPHA=1)

Figure 6. SPI modes supported

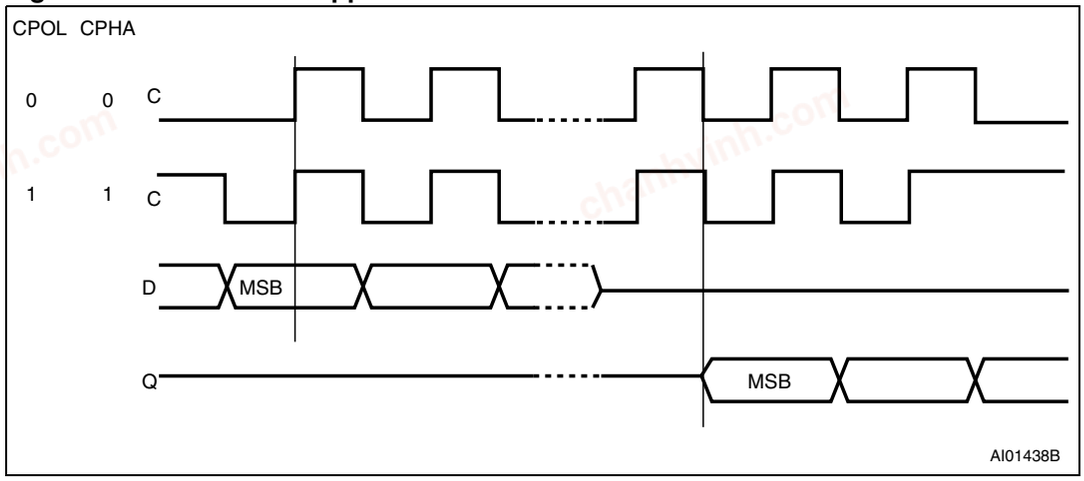

chanhvinh.com

5 Operating features

5.1 Supply voltage (V_{CC})

5.1.1 Operating supply voltage V_{CC}

Prior to selecting the memory and issuing instructions to it, a valid and stable V_{CC} voltage within the specified [V_{CC}(min), V_{CC}(max)] range must be applied (see Operating conditions in *Section 9: DC and AC parameters*). This voltage must remain stable and valid until the end of the transmission of the instruction and, for a Write instruction, until the completion of the internal write cycle (t_W). In order to secure a stable DC supply voltage, it is recommended to decouple the V_{CC} line with a suitable capacitor (usually of the order of 10 nF to 100 nF) close to the V_{CC}/V_{SS} device pins.

5.1.2 Device reset

In order to prevent erroneous instruction decoding and inadvertent Write operations during power-up, a power-on-reset (POR) circuit is included. At power-up, the device does not respond to any instruction until VCC reaches the POR threshold voltage. This threshold is lower than the minimum V_{CC} operating voltage (see Operating conditions in *Section 9: DC and AC parameters*).

At power-up, when V_{CC} passes over the POR threshold, the device is reset and is in the following state:

- in Standby Power mode,
- deselected,
- Status Register values:
  - The Write Enable Latch (WEL) bit is reset to 0.
  - The Write In Progress (WIP) bit is reset to 0.
  - The SRWD, BP1 and BP0 bits remain unchanged (non-volatile bits).

It is important to note that the device must not be accessed until V_{CC} reaches a valid and stable level within the specified [V_{CC}(min), V_{CC}(max)] range, as defined under Operating conditions in *Section 9: DC and AC parameters*.

5.1.3 Power-up conditions

When the power supply is turned on, V_{CC} rises continuously from V_{SS} to V_{CC}. During this time, the Chip Select ($\overline{S}$) line is not allowed to float but should follow the V_{CC} voltage. It is therefore recommended to connect the $\overline{S}$ line to V_{CC} via a suitable pull-up resistor (see *Figure 5*).

In addition, the Chip Select ($\overline{S}$) input offers a built-in safety feature, as the $\overline{S}$ input is edge-sensitive as well as level-sensitive: after power-up, the device does not become selected until a falling edge has first been detected on Chip Select ($\overline{S}$). This ensures that Chip Select ($\overline{S}$) must have been high, prior to going low to start the first operation.

The V_{CC} voltage has to rise continuously from 0 V up to the minimum V_{CC} operating voltage defined under Operating conditions in *Section 9: DC and AC parameters*, and the rise time must not vary faster than 1 V/µs.

chanhvinh.com

5.1.4 Power-down

During power-down (continuous decrease of the V_{CC} supply voltage below the minimum V_{CC} operating voltage defined under Operating conditions in *Section 9: DC and AC parameters*), the device must be:

- deselected (Chip Select $\overline{S}$ should be allowed to follow the voltage applied on V_{CC}),
- in Standby Power mode (there should not be any internal write cycle in progress).

5.2 Active Power and Standby Power modes

When Chip Select ($\overline{S}$) is low, the device is selected, and in the Active Power mode. The device consumes I_{CC}.

When Chip Select ($\overline{S}$) is high, the device is deselected. If a Write cycle is not currently in progress, the device then goes into the Standby Power mode, and the device consumption drops to I_{CC1}, as specified in DC characteristics (see *Section 9: DC and AC parameters*).

5.3 Hold condition

The Hold ($\overline{HOLD}$) signal is used to pause any serial communications with the device without resetting the clocking sequence.

To enter the Hold condition, the device must be selected, with Chip Select ($\overline{S}$) low.

During the Hold condition, the Serial Data Output (Q) is high impedance, and the Serial Data Input (D) and the Serial Clock (C) are Don't Care.

Normally, the device is kept selected for the whole duration of the Hold condition. Deselecting the device while it is in the Hold condition has the effect of resetting the state of the device, and this mechanism can be used if required to reset any processes that had been in progress.[(a)(b)]

Figure 7. Hold condition activation

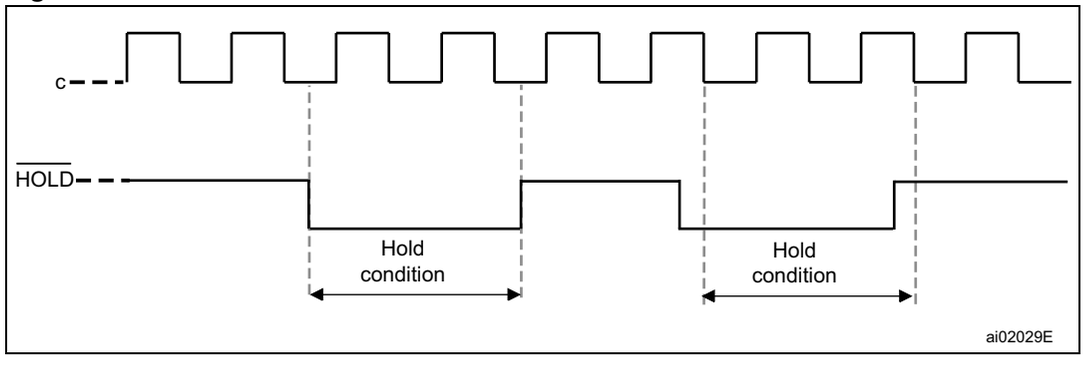

The Hold condition starts when the Hold (HOLD) signal is driven low when Serial Clock (C) is already low (as shown in *Figure 7*).

a. This resets the internal logic, except the WEL and WIP bits of the Status Register.

b. In the specific case where the device has shifted in a Write command (Inst + Address + data bytes, each data byte being exactly 8 bits), deselecting the device also triggers the Write cycle of this decoded command.

chanhvinh.com

The Hold condition ends when the Hold (HOLD) signal is driven high when Serial Clock (C) is already low.

Figure 7 also shows what happens if the rising and falling edges are not timed to coincide with Serial Clock (C) being low.

5.4 Status Register

The Status Register contains a number of status and control bits that can be read or set (as appropriate) by specific instructions. See *Section 6.3: Read Status Register (RDSR)* for a detailed description of the Status Register bits.

5.5 Data protection and protocol control

The device features the following data protection mechanisms:

- Before accepting the execution of the Write and Write Status Register instructions, the device checks whether the number of clock pulses comprised in the instructions is a multiple of eight.
- All instructions that modify data must be preceded by a Write Enable (WREN) instruction to set the Write Enable Latch (WEL) bit.
- The Block Protect (BP1, BP0) bits in the Status Register are used to configure part of the memory as read-only.
- The Write Protect ($\overline{W}$) signal is used to protect the Block Protect (BP1, BP0) bits in the Status Register.

For any instruction to be accepted, and executed, Chip Select ($\overline{S}$) must be driven high after the rising edge of Serial Clock (C) for the last bit of the instruction, and before the next rising edge of Serial Clock (C).

Two points should be noted in the previous sentence:

- The “last bit of the instruction” can be the eighth bit of the instruction code, or the eighth bit of a data byte, depending on the instruction (except for Read Status Register (RDSR) and Read (READ) instructions).
- The “next rising edge of Serial Clock (C)” might (or might not) be the next bus transaction for some other device on the SPI bus.

Table 2. Write-protected block size

Status Register bits		Protected block	Protected array addresses
BP1	BP0		
0	0	none	none
0	1	Upper quarter	3000h - 3FFFh
1	0	Upper half	2000h - 3FFFh
1	1	Whole memory	0000h - 3FFFh plus Identification page

chanhvinh.com

6 Instructions

Each instruction starts with a single-byte code, as summarized in *Table 3*.

If an invalid instruction is sent (one not contained in *Table 3*), the device automatically deselects itself.

Table 3. Instruction set

Instruction	Description	Instruction format
WREN	Write Enable	0000 0110
WRDI	Write Disable	0000 0100
RDSR	Read Status Register	0000 0101
WRSR	Write Status Register	0000 0001
READ	Read from Memory Array	0000 0011
WRITE	Write to Memory Array	0000 0010

Table 4. M95128-D instruction set

Instruction	Description	Instruction format
WREN	Write Enable	0000 0110
WRDI	Write Disable	0000 0100
RDSR	Read Status Register	0000 0101
WRSR	Write Status Register	0000 0001
READ	Read from Memory Array	0000 0011
WRITE	Write to Memory Array	0000 0010
Read Identification Page	Reads the page dedicated to identification.	1000 0011(1)
Write Identification Page	Writes the page dedicated to identification.	1000 0010(1)
Read Lock Status	Reads the lock status of the Identification Page.	1000 0011(2)
Lock ID	Locks the Identification page in read-only mode.	1000 0010(2)

1. Address bit A10 must be 0, all other address bits are Don't Care.
2. Address bit A10 must be 1, all other address bits are Don't Care.

Table 5. Address range bits

Address significant bits	A13-A0(1)

1. Upper MSBs are Don’t Care.

chanhvinh.com

6.1 Write Enable (WREN)

The Write Enable Latch (WEL) bit must be set prior to each WRITE and WRSR instruction. The only way to do this is to send a Write Enable instruction to the device.

As shown in *Figure 8*, to send this instruction to the device, Chip Select ($\overline{S}$) is driven low, and the bits of the instruction byte are shifted in, on Serial Data Input (D). The device then enters a wait state. It waits for the device to be deselected, by Chip Select ($\overline{S}$) being driven high.

Figure 8. Write Enable (WREN) sequence

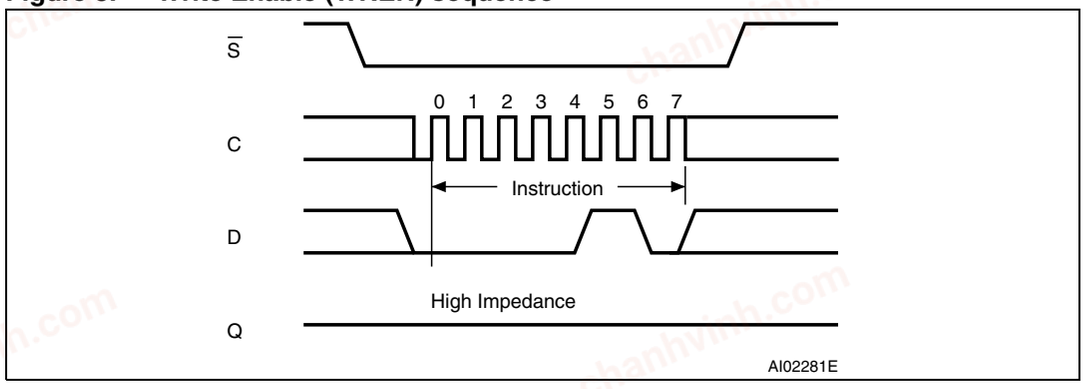

6.2 Write Disable (WRDI)

One way of resetting the Write Enable Latch (WEL) bit is to send a Write Disable instruction to the device.

As shown in *Figure 9*, to send this instruction to the device, Chip Select ($\overline{S}$) is driven low, and the bits of the instruction byte are shifted in, on Serial Data Input (D).

The device then enters a wait state. It waits for a the device to be deselected, by Chip Select ($\overline{S}$) being driven high.

The Write Enable Latch (WEL) bit, in fact, becomes reset by any of the following events:

- Power-up
- WRDI instruction execution
- WRSR instruction completion
- WRITE instruction completion.

chanhvinh.com

Figure 9. Write Disable (WRDI) sequence

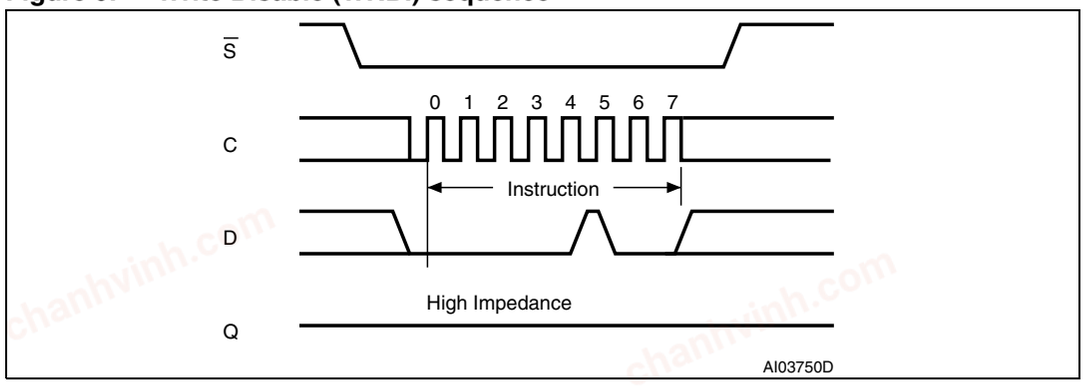

6.3 Read Status Register (RDSR)

The Read Status Register (RDSR) instruction is used to read the Status Register. The Status Register may be read at any time, even while a Write or Write Status Register cycle is in progress. When one of these cycles is in progress, it is recommended to check the Write In Progress (WIP) bit before sending a new instruction to the device. It is also possible to read the Status Register continuously, as shown in *Figure 10*.

Figure 10. Read Status Register (RDSR) sequence

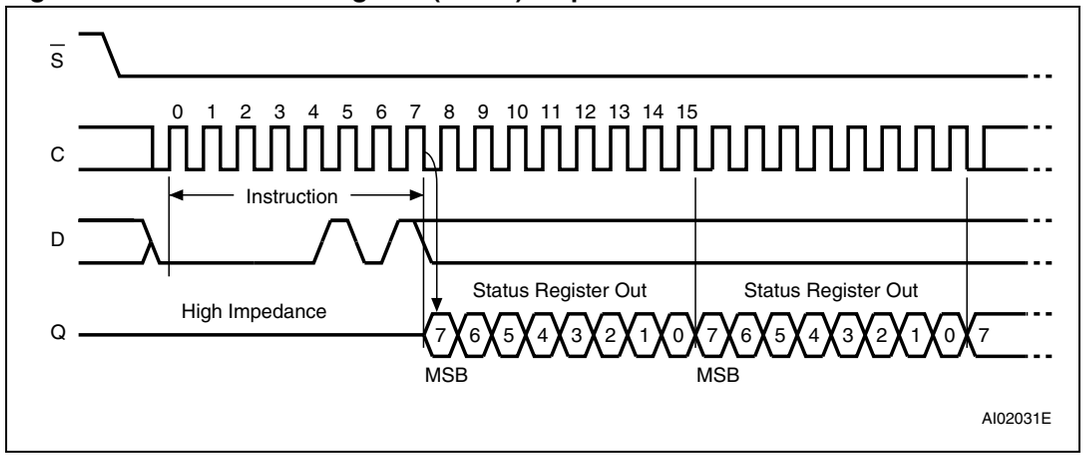

The status and control bits of the Status Register are as follows:

6.3.1 WIP bit

The Write In Progress (WIP) bit indicates whether the memory is busy with a Write or Write Status Register cycle. When set to 1, such a cycle is in progress, when reset to 0, no such cycle is in progress.

chanhvinh.com

6.3.2 WEL bit

The Write Enable Latch (WEL) bit indicates the status of the internal Write Enable Latch. When set to 1, the internal Write Enable Latch is set. When set to 0, the internal Write Enable Latch is reset, and no Write or Write Status Register instruction is accepted.

The WEL bit is returned to its reset state by the following events:

- Power-up
- Write Disable (WRDI) instruction completion
- Write Status Register (WRSR) instruction completion
- Write (WRITE) instruction completion

6.3.3 BP1, BP0 bits

The Block Protect (BP1, BP0) bits are non volatile. They define the size of the area to be software-protected against Write instructions. These bits are written with the Write Status Register (WRSR) instruction. When one or both of the Block Protect (BP1, BP0) bits is set to 1, the relevant memory area (as defined in *Table 2*) becomes protected against Write (WRITE) instructions. The Block Protect (BP1, BP0) bits can be written provided that the Hardware Protected mode has not been set.

6.3.4 SRWD bit

The Status Register Write Disable (SRWD) bit is operated in conjunction with the Write Protect ($\overline{W}$) signal. The Status Register Write Disable (SRWD) bit and Write Protect ($\overline{W}$) signal enable the device to be put in the Hardware Protected mode (when the Status Register Write Disable (SRWD) bit is set to 1, and Write Protect ($\overline{W}$) is driven low). In this mode, the non-volatile bits of the Status Register (SRWD, BP1, BP0) become read-only bits and the Write Status Register (WRSR) instruction is no longer accepted for execution.

Table 6. Status Register format

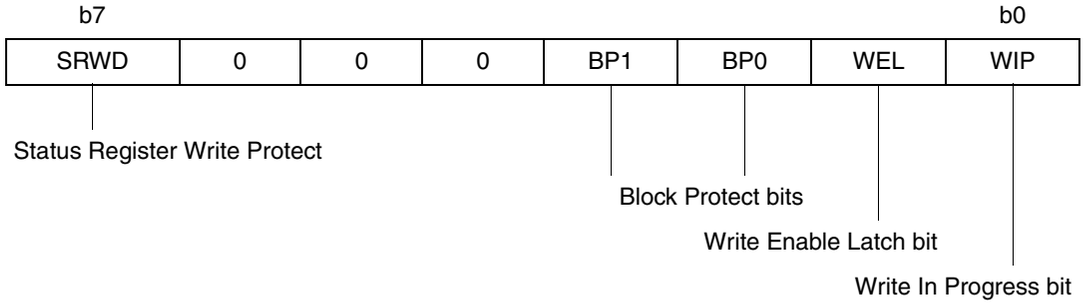

chanhvinh.com

6.4 Write Status Register (WRSR)

The Write Status Register (WRSR) instruction is used to write new values to the Status Register. Before it can be accepted, a Write Enable (WREN) instruction must have been previously executed.

The Write Status Register (WRSR) instruction is entered by driving Chip Select ($\overline{S}$) low, followed by the instruction code, the data byte on Serial Data input (D) and Chip Select ($\overline{S}$) driven high. Chip Select ($\overline{S}$) must be driven high after the rising edge of Serial Clock (C) that latches in the eighth bit of the data byte, and before the next rising edge of Serial Clock (C). Otherwise, the Write Status Register (WRSR) instruction is not executed.

The instruction sequence is shown in *Figure 11*.

Figure 11. Write Status Register (WRSR) sequence

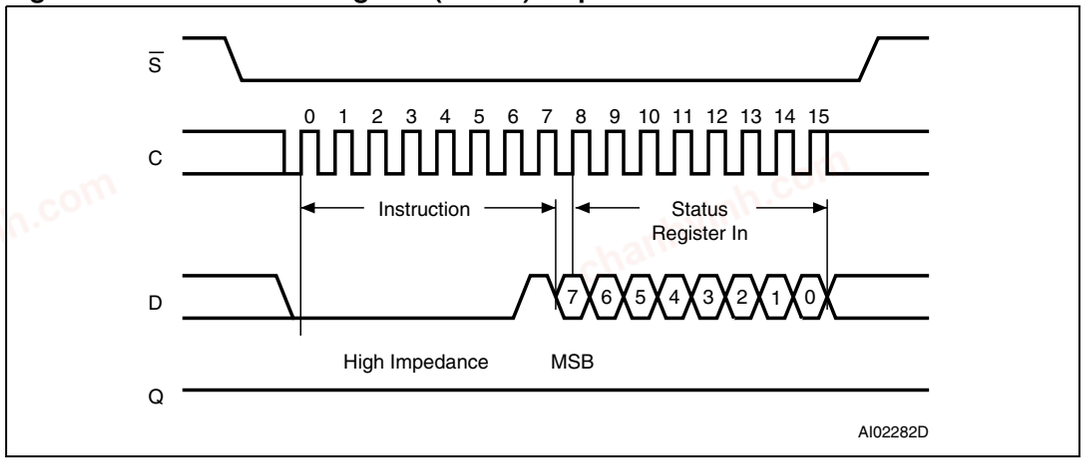

Driving the Chip Select ($\overline{S}$) signal high at a byte boundary of the input data triggers the self-timed Write cycle that takes t_W to complete (as specified in AC tables under *Section 9: DC and AC parameters*).

While the Write Status Register cycle is in progress, the Status Register may still be read to check the value of the Write in progress (WIP) bit: the WIP bit is 1 during the self-timed Write cycle t_W, and 0 when the Write cycle is complete. The WEL bit (Write Enable Latch) is also reset at the end of the Write cycle t_W.

The Write Status Register (WRSR) instruction enables the user to change the values of the BP1, BP0 and SRWD bits:

- The Block Protect (BP1, BP0) bits define the size of the area that is to be treated as read-only, as defined in *Table 2*.
- The SRWD (Status Register Write Disable) bit, in accordance with the signal read on the Write Protect pin ($\overline{W}$), enables the user to set or reset the Write protection mode of the Status Register itself, as defined in *Table 7*. When in Write-protected mode, the Write Status Register (WRSR) instruction is not executed.

The contents of the SRWD and BP1, BP0 bits are updated after the completion of the WRSR instruction, including the t_W Write cycle.

The Write Status Register (WRSR) instruction has no effect on the b6, b5, b4, b1, b0 bits in the Status Register. Bits b6, b5, b4 are always read as 0.

chanhvinh.com

Table 7. Protection modes

$\overline{W}$ signal	SRWD bit	Mode	Write protection of the Status Register	Memory content	
				Protected area(1)	Unprotected area(1)
1	0	Software-protected (SPM)	Status Register is writable (if the WREN instruction has set the WEL bit). The values in the BP1 and BP0 bits can be changed.	Write-protected	Ready to accept Write instructions
0	0				
1	1				
0	1	Hardware-protected (HPM)	Status Register is Hardware write-protected. The values in the BP1 and BP0 bits cannot be changed.	Write-protected	Ready to accept Write instructions

1. As defined by the values in the Block Protect (BP1, BP0) bits of the Status Register. See *Table 2*.

The protection features of the device are summarized in *Table 7*.

When the Status Register Write Disable (SRWD) bit in the Status Register is 0 (its initial delivery state), it is possible to write to the Status Register (provided that the WEL bit has previously been set by a WREN instruction), regardless of the logic level applied on the Write Protect ($\overline{W}$) input pin.

When the Status Register Write Disable (SRWD) bit in the Status Register is set to 1, two cases should be considered, depending on the state of the Write Protect ($\overline{W}$) input pin:

- If Write Protect ($\overline{W}$) is driven high, it is possible to write to the Status Register (provided that the WEL bit has previously been set by a WREN instruction).
- If Write Protect ($\overline{W}$) is driven low, it is not possible to write to the Status Register even if the WEL bit has previously been set by a WREN instruction. (Attempts to write to the Status Register are rejected, and are not accepted for execution). As a consequence, all the data bytes in the memory area, which are Software-protected (SPM) by the Block Protect (BP1, BP0) bits in the Status Register, are also hardware-protected against data modification.

Regardless of the order of the two events, the Hardware-protected mode (HPM) can be entered by:

- either setting the SRWD bit after driving the Write Protect ($\overline{W}$) input pin low,
- or driving the Write Protect ($\overline{W}$) input pin low after setting the SRWD bit.

Once the Hardware-protected mode (HPM) has been entered, the only way of exiting it is to pull high the Write Protect ($\overline{W}$) input pin.

If the Write Protect ($\overline{W}$) input pin is permanently tied high, the Hardware-protected mode (HPM) can never be activated, and only the Software-protected mode (SPM), using the Block Protect (BP1, BP0) bits in the Status Register, can be used.

chanhvinh.com

6.5 Read from Memory Array (READ)

As shown in *Figure 12*, to send this instruction to the device, Chip Select ($\overline{S}$) is first driven low. The bits of the instruction byte and address bytes are then shifted in, on Serial Data Input (D). The address is loaded into an internal address register, and the byte of data at that address is shifted out, on Serial Data Output (Q).

Figure 12. Read from Memory Array (READ) sequence

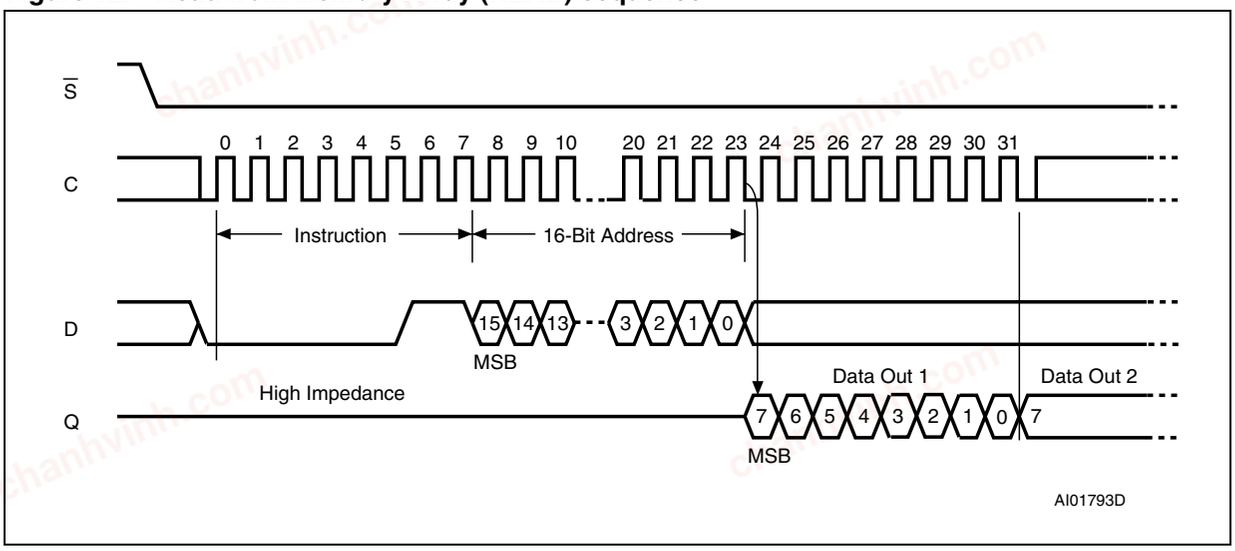

1. Depending on the memory size, as shown in *Table 5*, the most significant address bits are Don't Care.

If Chip Select ($\overline{S}$) continues to be driven low, the internal address register is incremented automatically, and the byte of data at the new address is shifted out.

When the highest address is reached, the address counter rolls over to zero, allowing the Read cycle to be continued indefinitely. The whole memory can, therefore, be read with a single READ instruction.

The Read cycle is terminated by driving Chip Select ($\overline{S}$) high. The rising edge of the Chip Select ($\overline{S}$) signal can occur at any time during the cycle.

The instruction is not accepted, and is not executed, if a Write cycle is currently in progress.

6.6 Write to Memory Array (WRITE)

As shown in *Figure 13*, to send this instruction to the device, Chip Select ($\overline{S}$) is first driven low. The bits of the instruction byte, address byte, and at least one data byte are then shifted in, on Serial Data Input (D).

The instruction is terminated by driving Chip Select ($\overline{S}$) high at a byte boundary of the input data. The self-timed Write cycle, triggered by the Chip Select ($\overline{S}$) rising edge, continues for a period t_W (as specified in AC characteristics in *Section 9: DC and AC parameters*), at the end of which the Write in Progress (WIP) bit is reset to 0.

chanhvinh.com

Figure 13. Byte Write (WRITE) sequence

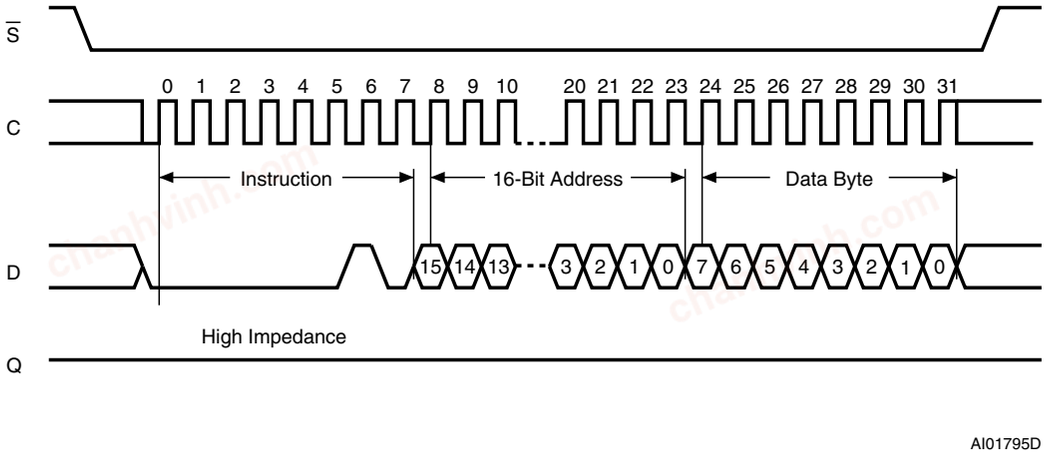

1. Depending on the memory size, as shown in *Table 5*, the most significant address bits are Don't Care.

In the case of *Figure 13*, Chip Select ($\overline{S}$) is driven high after the eighth bit of the data byte has been latched in, indicating that the instruction is being used to write a single byte. However, if Chip Select ($\overline{S}$) continues to be driven low, as shown in *Figure 14*, the next byte of input data is shifted in, so that more than a single byte, starting from the given address towards the end of the same page, can be written in a single internal Write cycle.

Each time a new data byte is shifted in, the least significant bits of the internal address counter are incremented. If more bytes are sent than will fit up to the end of the page, a condition known as "roll-over" occurs. In case of roll-over, the bytes exceeding the page size are overwritten from location 0 of the same page.

The instruction is not accepted, and is not executed, under the following conditions:

- if the Write Enable Latch (WEL) bit has not been set to 1 (by executing a Write Enable instruction just before),
- if a Write cycle is already in progress,
- if the device has not been deselected, by driving high Chip Select ($\overline{S}$), at a byte boundary (after the eighth bit, b0, of the last data byte that has been latched in),
- if the addressed page is in the region protected by the Block Protect (BP1 and BP0) bits.

Note: The self-timed write cycle t_W is internally executed as a sequence of two consecutive events: [Erase addressed byte(s)], followed by [Program addressed byte(s)]. An erased bit is read as "0" and a programmed bit is read as "1".

chanhvinh.com

Figure 14. Page Write (WRITE) sequence

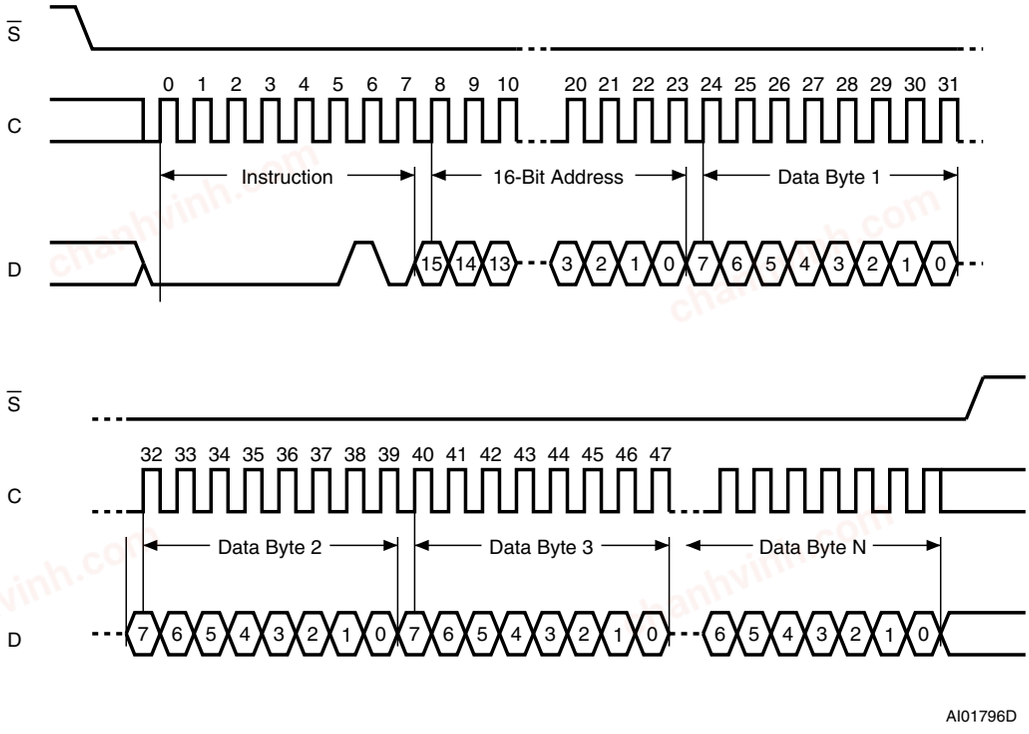

1. Depending on the memory size, as shown in *Table 5*, the most significant address bits are Don't Care.

chanhvinh.com

6.6.1 Cycling with Error Correction Code (ECC)

M95128 and M95128-D devices offer an Error Correction Code (ECC) logic. The ECC is an internal logic function which is transparent for the SPI communication protocol.

The ECC logic is implemented on each group of four EEPROM bytes[c]. Inside a group, if a single bit out of the four bytes happens to be erroneous during a Read operation, the ECC detects this bit and replaces it with the correct value. The read reliability is therefore much improved.

Even if the ECC function is performed on groups of four bytes, a single byte can be written/cycled independently. In this case, the ECC function also writes/cycles the three other bytes located in the same group[c]. As a consequence, the maximum cycling budget is defined at group level and the cycling can be distributed over the four bytes of the group: the sum of the cycles seen by byte0, byte1, byte2 and byte3 of the same group must remain below the maximum value defined in *Table 14*.

c. A group of four bytes is located at addresses [4*N, 4*N+1, 4*N+2, 4*N+3], where N is an integer.

chanhvinh.com

6.7 Read Identification Page (available only in M95128-D devices)

The Identification Page (64 bytes) is an additional page which can be written and (later) permanently locked in Read-only mode.

Reading this page is achieved with the Read Identification Page instruction (see *Table 4*). The Chip Select signal ($\overline{S}$) is first driven low, the bits of the instruction byte and address bytes are then shifted in, on Serial Data Input (D). Address bit A10 must be 0, upper address bits are Don't Care, and the data byte pointed to by the lower address bits [A5:A0] is shifted out on Serial Data Output (Q). If Chip Select ($\overline{S}$) continues to be driven low, the internal address register is automatically incremented, and the byte of data at the new address is shifted out.

The number of bytes to read in the ID page must not exceed the page boundary, otherwise unexpected data is read (e.g.: when reading the ID page from location 24d, the number of bytes should be less than or equal to 40d, as the ID page boundary is 64 bytes).

The read cycle is terminated by driving Chip Select ($\overline{S}$) high. The rising edge of the Chip Select ($\overline{S}$) signal can occur at any time during the cycle. The first byte addressed can be any byte within any page.

The instruction is not accepted, and is not executed, if a write cycle is currently in progress.

Figure 15. Read Identification Page sequence

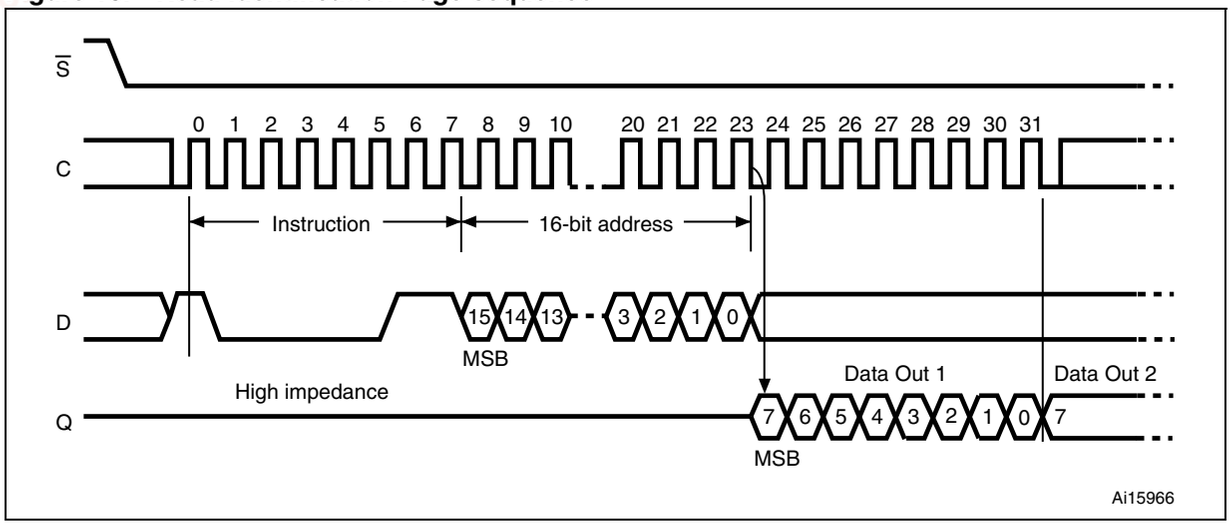

chanhvinh.com

6.8 Write Identification Page (available only in M95128-D devices)

The Identification Page (64 bytes) is an additional page which can be written and (later) permanently locked in Read-only mode.

Writing this page is achieved with the Write Identification Page instruction (see *Table 4*). The Chip Select signal ($\overline{S}$) is first driven low. The bits of the instruction byte, address bytes, and at least one data byte are then shifted in on Serial Data Input (D). Address bit A10 must be 0, upper address bits are Don't Care, the lower address bits [A5:A0] address bits define the byte address inside the identification page. The instruction sequence is shown in *Figure 16*.

Figure 16. Write identification page sequence

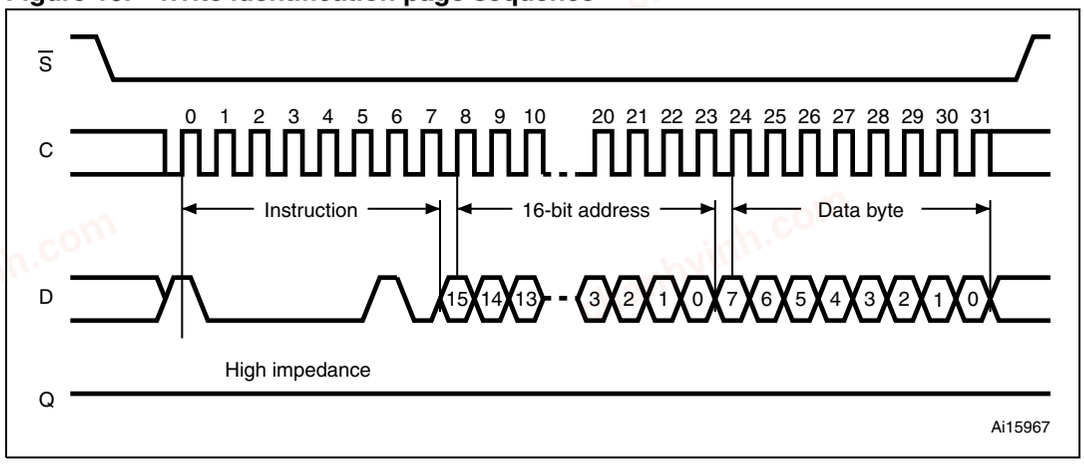

chanhvinh.com

6.9 Read Lock Status (available only in M95128-D devices)

The Read Lock Status instruction (see *Table 4*) is used to check whether the Identification Page is locked or not in Read-only mode. The Read Lock Status sequence is defined with the Chip Select ($\overline{S}$) first driven low. The bits of the instruction byte and address bytes are then shifted in on Serial Data Input (D). Address bit A10 must be 1, all other address bits are Don't Care. The Lock bit is the LSB (least significant bit) of the byte read on Serial Data Output (Q). It is at “1” when the lock is active and at “0” when the lock is not active. If Chip Select ($\overline{S}$) continues to be driven low, the same data byte is shifted out. The read cycle is terminated by driving Chip Select ($\overline{S}$) high.

The instruction sequence is shown in *Figure 17*.

Figure 17. Read Lock Status sequence

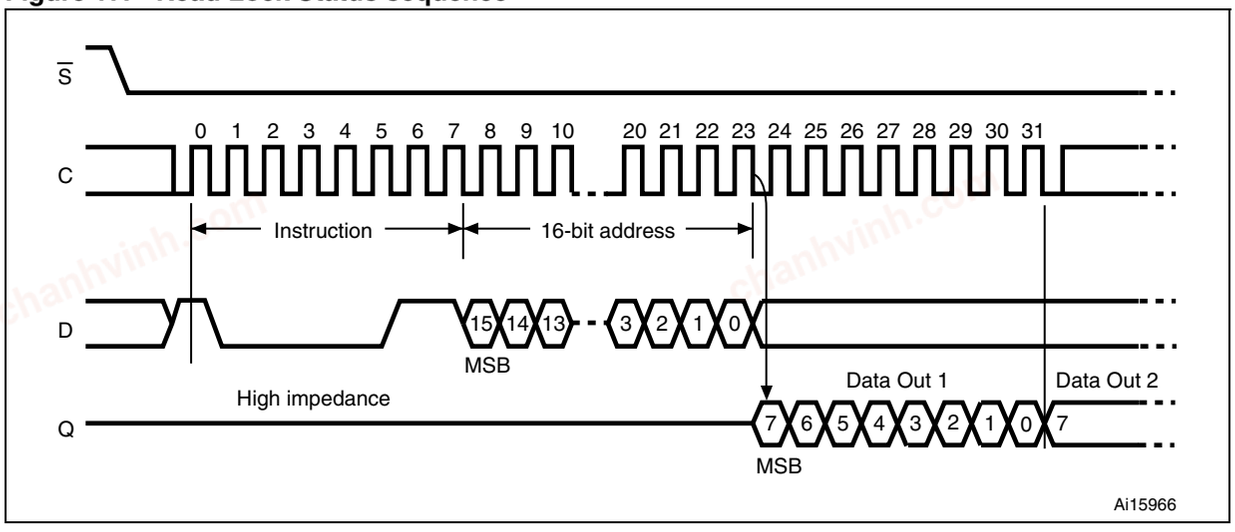

chanhvinh.com

6.10 Lock ID (available only in M95128-D devices)

The Lock ID instruction permanently locks the Identification Page in read-only mode. Before this instruction can be accepted, a Write Enable (WREN) instruction must have been executed.

The Lock ID instruction is issued by driving Chip Select ($\overline{S}$) low, sending the instruction code, the address and a data byte on Serial Data Input (D), and driving Chip Select ($\overline{S}$) high. In the address sent, A10 must be equal to 1, all other address bits are Don't Care. The data byte sent must be equal to the binary value xxxx xx1x, where x = Don't Care.

Chip Select ($\overline{S}$) must be driven high after the rising edge of Serial Clock (C) that latches in the eighth bit of the data byte, and before the next rising edge of Serial Clock (C). Otherwise, the Lock ID instruction is not executed.

Driving Chip Select ($\overline{S}$) high at a byte boundary of the input data triggers the self-timed write cycle whose duration is t_W (as specified in AC characteristics in *Section 9: DC and AC parameters*). The instruction sequence is shown in *Figure 18*.

The instruction is discarded, and is not executed, under the following conditions:

- If a Write cycle is already in progress,
- If the Block Protect bits (BP1,BP0) = (1,1),
- If a rising edge on Chip Select ($\overline{S}$) happens outside of a byte boundary.

Figure 18. Lock ID sequence

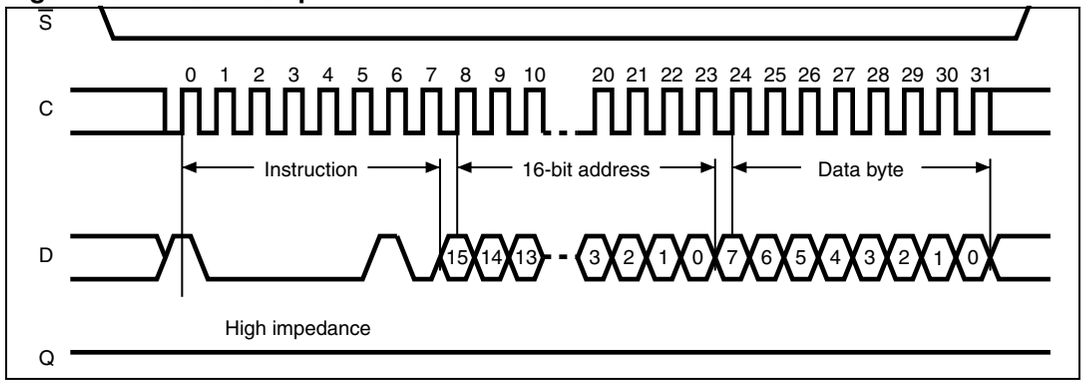

chanhvinh.com

7 Power-up and delivery state

7.1 Power-up state

After power-up, the device is in the following state:

- Standby power mode,
- deselected (after power-up, a falling edge is required on Chip Select ($\overline{S}$) before any instructions can be started),
- not in the Hold condition,
- the Write Enable Latch (WEL) is reset to 0,
- Write In Progress (WIP) is reset to 0.

The SRWD, BP1 and BP0 bits of the Status Register are unchanged from the previous power-down (they are non-volatile bits).

7.2 Initial delivery state

The device is delivered with the memory array bits and identification page bits set to all 1s (each byte = FFh). The Status Register Write Disable (SRWD) and Block Protect (BP1 and BP0) bits are initialized to 0.

chanhvinh.com

8 Maximum rating

Stressing the device outside the ratings listed in *Table 8* may cause permanent damage to the device. These are stress ratings only, and operation of the device at these, or any other conditions outside those indicated in the operating sections of this specification, is not implied. Exposure to absolute maximum rating conditions for extended periods may affect device reliability.

Table 8. Absolute maximum ratings

Symbol	Parameter	Min.	Max.	Unit
	Ambient operating temperature	–40	130	°C
T_{STG}	Storage temperature	–65	150	°C
T_{LEAD}	Lead temperature during soldering	See note (1)		°C
V_O	Output voltage	–0.50	V_{CC}+0.6	V
V_I	Input voltage	–0.50	6.5	V
V_{CC}	Supply voltage	–0.50	6.5	V
I_{OL}	DC output current (Q = 0)		5	mA
I_{OH}	DC output current (Q = 1)		5	mA
V_{ESD}	Electrostatic discharge voltage (human body model)(2)		4000	V

1. Compliant with JEDEC Std J-STD-020 (for small body, Sn-Pb or Pb assembly), with the ST ECOPACK® 7191395 specification, and with the European directive on Restrictions on Hazardous Substances (RoHS) 2002/95/EU.
2. Positive and negative pulses applied on different combinations of pin connections, according to AEC-Q100-002 (compliant with JEDEC Std JESD22-A114, C1=100 pF, R1=1500 Ω, R2=500 Ω).

chanhvinh.com

9 DC and AC parameters

This section summarizes the operating conditions and the DC/AC characteristics of the device.

Table 9. Operating conditions (M95128-W, device grade 6)

Symbol	Parameter	Min.	Max.	Unit
V_{CC}	Supply voltage	2.5	5.5	V
T_A	Ambient operating temperature	–40	85	°C

Table 10. Operating conditions (M95128-R, device grade 6)

Symbol	Parameter	Min.	Max.	Unit
V_{CC}	Supply voltage	1.8	5.5	V
T_A	Ambient operating temperature	–40	85	°C

Table 11. Operating conditions (M95128-DF, device grade 6)

Symbol	Parameter	Min.	Max.	Unit
V_{CC}	Supply voltage	1.7	5.5	V
T_A	Ambient operating temperature	–40	85	°C

Table 12. AC measurement conditions

Symbol	Parameter	Min.	Max.	Unit
C_L	Load capacitance		30 or 100(1)	pF
	Input rise and fall times		50	ns
	Input pulse voltages	0.2 V_{CC} to 0.8 V_{CC}		V
	Input and output timing reference voltages	0.3 V_{CC} to 0.7 V_{CC}		V

1. See AC tables *19*, *20* and *21*.

Figure 19. AC measurement I/O waveform

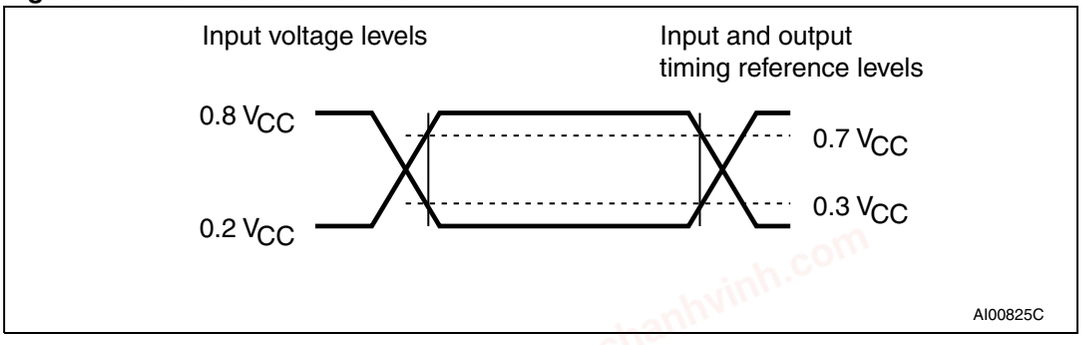

chanhvinh.com

Table 13. Capacitance

Symbol	Parameter	Test conditions(1)	Min.	Max.	Unit
C_{OUT}	Output capacitance (Q)	V_{OUT} = 0 V		8	pF
C_{IN}	Input capacitance (D)	V_{IN} = 0 V		8	pF
	Input capacitance (other pins)	V_{IN} = 0 V		6	pF

1. Sampled only, not 100% tested, at T_A = 25 °C and a frequency of 5 MHz.

Table 14. Cycling performance by groups of four bytes

Symbol	Parameter(1)	Test conditions	Min.	Max.	Unit
Ncycle	Write cycle endurance(2)	TA ≤ 25 °C, V_{CC}(min) < V_{CC} < V_{CC}(max)		4,000,000	Write cycle(3)
		TA = 85 °C, V_{CC}(min) < V_{CC} < V_{CC}(max)		1,200,000	

1. Cycling performance for products identified by process letter K.
2. The Write cycle endurance is defined for groups of four data bytes located at addresses [4*N, 4*N+1, 4*N+2, 4*N+3] where N is an integer. The Write cycle endurance is defined by characterization and qualification.
3. A Write cycle is executed when either a Page Write, a Byte Write, a WRSR, a WRID or an LID instruction is decoded. When using the Byte Write, the Page Write or the WRID instruction, refer also to *Section 6.6.1: Cycling with Error Correction Code (ECC)*.

Table 15. Memory cell data retention

Parameter	Test conditions	Min.	Unit
Data retention(1)	TA = 55 °C	200	Year

1. For products identified by process letter K. The data retention behavior is checked in production. The 200-year limit is defined from characterization and qualification results.

chanhvinh.com

Table 16. DC characteristics (M95128-W, device grade 6)

Symbol	Parameter	Test conditions in addition to those defined in *Table 9* and *Table 12*	Min.	Max.	Unit
I_{LI}	Input leakage current	$V_{IN} = V_{SS}$ or V_{CC}		± 2	µA
I_{LO}	Output leakage current	$\overline{S} = V_{CC}$, $V_{OUT} = V_{SS}$ or V_{CC}		± 2	µA
I_{CC}	Supply current (Read)	V_{CC}= 2.5 V, C = 0.1 V_{CC}/0.9 V_{CC} at 5 MHz, Q = open		3(1)	mA
		V_{CC}= 2.5 V, C = 0.1 V_{CC}/0.9 V_{CC} at 10 MHz, Q = open		2(2)	
		V_{CC}= 5.5 V, C = 0.1 V_{CC}/0.9 V_{CC} at 5 MHz, Q = open		5(1)	
		V_{CC}= 5.5 V, C = 0.1 V_{CC}/0.9 V_{CC} at 20 MHz, Q = open		5(2)	
I_{CC0}(3)	Supply current (Write)	During t_W, $\overline{S} = V_{CC}$, 2.5 V < V_{CC} < 5.5 V			mA
I_{CC1}	Supply current (Standby)	$\overline{S} = V_{CC}$, V_{CC} = 5.5 V, $V_{IN} = V_{SS}$ or V_{CC},		3(4)	µA
		$\overline{S} = V_{CC}$, V_{CC} = 2.5 V, $V_{IN} = V_{SS}$ or V_{CC},		2(4)	
V_{IL}	Input low voltage		–0.45	0.3 V_{CC}	V
V_{IH}	Input high voltage		0.7 V_{CC}	V_{CC}+1	V
V_{OL}	Output low voltage	V_{CC} = 2.5 V and I_{OL} = 1.5 mA or V_{CC} = 5 V and I_{OL} = 2 mA		0.4	V
V_{OH}	Output high voltage	V_{CC} = 2.5 V and I_{OH} = –0.4 mA or V_{CC} = 5 V and I_{OH} = –2 mA	0.8 V_{CC}		V

1. For previous products identified with process letter A.
2. For the M95128 devices identified by process letter K.
3. Characterized only, not tested in production.
4. 5 µA for previous M95128 devices identified by process letter A.

chanhvinh.com

Table 17. DC characteristics (M95128-R, device grade 6)

Symbol	Parameter	Test conditions in addition to those defined in *Table 10* and *Table 12*[1]	Min.	Max.	Unit
I_{LI}	Input leakage current	$V_{IN} = V_{SS}$ or V_{CC}		± 2	µA
I_{LO}	Output leakage current	$\overline{S} = V_{CC}$, voltage applied on Q = V_{SS} or V_{CC}		± 2	µA
I_{CC}	Supply current (Read)	V_{CC} = 1.8 V, C = 0.1 V_{CC} or 0.9 V_{CC}, at 2 MHz, Q = open		1[2]	mA
		V_{CC} = 1.8 V, C = 0.1 V_{CC} or 0.9 V_{CC}, at 5 MHz, Q = open		2[3]	
I_{CC0}[4]	Supply current (Write)	V_{CC} = 1.8 V, during t_W, $\overline{S} = V_{CC}$		3	mA
I_{CC1}	Supply current (Standby)	V_{CC} = 1.8 V, $\overline{S} = V_{CC}$, $V_{IN} = V_{SS}$ or V_{CC}		1[5]	µA
V_{IL}	Input low voltage	1.8 V ≤V_{CC} < 2.5 V	–0.45	0.25 V_{CC}	V
V_{IH}	Input high voltage	1.8 V ≤V_{CC} < 2.5 V	0.75 V_{CC}	V_{CC}+1	V
V_{OL}	Output low voltage	I_{OL} = 0.15 mA, V_{CC} = 1.8 V		0.3	V
V_{OH}	Output high voltage	I_{OH} = –0.1 mA, V_{CC} = 1.8 V	0.8 V_{CC}		V

1. If the application uses the M95128-R device with 2.5 V < V_{CC} < 5.5 V and -40 °C < TA < +85 °C, please refer to *Table 16: DC characteristics (M95128-W, device grade 6)*, rather than to the above table.
2. Value tested only for previous M95128 devices identified by process letter A.
3. Only for M95128 devices identified by process letter K.
4. Characterized only, not tested in production.
5. 3 µA for previous M95128 devices identified by process letter A.

chanhvinh.com

Table 18. DC characteristics (M95128-DF, device grade 6)

Symbol	Parameter	Test conditions in addition to those defined in *Table 11* and *Table 12*[1]	Min.	Max.	Unit
I_{LI}	Input leakage current	$V_{IN} = V_{SS}$ or V_{CC}		± 2	µA
I_{LO}	Output leakage current	$\overline{S} = V_{CC}$, voltage applied on Q = V_{SS} or V_{CC}		± 2	µA
I_{CC}	Supply current (Read)	V_{CC} = 1.7 V, C = 0.1 V_{CC} or 0.9 V_{CC}, at 5 MHz, Q = open		2	mA
I_{CC0}[2]	Supply current (Write)	V_{CC} = 1.7 V, during t_W, $\overline{S} = V_{CC}$		3	mA
I_{CC1}	Supply current (Standby)	V_{CC} = 1.7 V, $\overline{S} = V_{CC}$, $V_{IN} = V_{SS}$ or V_{CC}		1	µA
V_{IL}	Input low voltage	1.7 V ≤V_{CC} < 2.5 V	–0.45	0.25 V_{CC}	V
V_{IH}	Input high voltage	1.7 V ≤V_{CC} < 2.5 V	0.75 V_{CC}	V_{CC}+1	V
V_{OL}	Output low voltage	I_{OL} = 0.15 mA, V_{CC} = 1.7 V		0.3	V
V_{OH}	Output high voltage	I_{OH} = –0.1 mA, V_{CC} = 1.7 V	0.8 V_{CC}		V

1. If the application uses the M95128-DF devices at 2.5 V ≤ V_{CC} ≤ 5.5 V and –40 °C ≤T_A ≤ +85 °C, please refer to *Table 16: DC characteristics (M95128-W, device grade 6)*, rather than to the above table.
2. Characterized only, not tested in production.

chanhvinh.com

Table 19. AC characteristics (M95128-W, device grade 6)

Test conditions specified in *Table 9* and *Table 12*			Previous(1) and new products $C_L \leq 100$ pF		New products(2) $C_L \leq 30$ pF				Unit
					$V_{cc} \geq 2.5V$		$V_{cc} \geq 4.5V$		
Symbol	Alt.	Parameter	Min.	Max.	Min.	Max.	Min.	Max.	
f_C	f_{SCK}	Clock frequency	D.C.	5	D.C.	10	D.C.	20	MHz
t_{SLCH}	t_{CSS1}	$\overline{S}$ active setup time	90		30		15		ns
t_{SHCH}	t_{CSS2}	$\overline{S}$ not active setup time	90		30		15		ns
t_{SHSL}	t_{CS}	$\overline{S}$ deselect time	100		40		20		ns
t_{CHSH}	t_{CSH}	$\overline{S}$ active hold time	90		30		15		ns
t_{CHSL}		$\overline{S}$ not active hold time	90		30		15		ns
t_{CH} (3)	t_{CLH}	Clock high time	90		40		20		ns
t_{CL} (3)	t_{CLL}	Clock low time	90		40		20		ns
t_{CLCH} (3)	t_{RC}	Clock rise time		1		2		2	µs
t_{CHCL} (3)	t_{FC}	Clock fall time		1		2		2	µs
t_{DVCH}	t_{DSU}	Data in setup time	20		10		5		ns
t_{CHDX}	t_{DH}	Data in hold time	30		10		10		ns
t_{HHCH}		Clock low hold time after HOLD not active	70		30		15		ns
t_{HLCH}		Clock low hold time after HOLD active	40		30		15		ns
t_{CLHL}		Clock low setup time before HOLD active	0		0		0		ns
t_{CLHH}		Clock low setup time before HOLD not active	0		0		0		ns
t_{SHQZ} (4)	t_{DIS}	Output disable time		100		40		20	ns
t_{CLQV}	t_V	Clock low to output valid		60		40		20	ns
t_{CLQX}	t_{HO}	Output hold time	0		0		0		ns
t_{QLQH} (4)	t_{RO}	Output rise time		50		20		10	ns
t_{QHQL} (4)	t_{FO}	Output fall time		50		20		10	ns
t_{HHQV}	t_{LZ}	HOLD high to output valid		50		40		20	ns
t_{HLQZ} (4)	t_{HZ}	HOLD low to output High-Z		100		40		20	ns
t_W	t_{WC}	Write time		5		5		5	ms

1. Previous products are identified by process letters A.
2. New products are M95128 devices identified by process letter K.
3. $t_{CH} + t_{CL}$ must never be less than the shortest possible clock period, $1 / f_C$(max).
4. Characterized only, not tested in production.

chanhvinh.com

Table 20. AC characteristics (M95128-R, device grade 6)

Test conditions specified in *Table 10* and *Table 12*											
Symbol	Alt.	Parameter	Previous products (1) $C_L \leq 100$ pF		New products (2)						Unit
					$V_{CC} \geq 1.8V$ $C_L \leq 100$ pF		$V_{CC} \geq 2.5V$ $C_L \leq 30$ pF		$V_{CC} \geq 4.5V$ $C_L \leq 30$ pF		
			Min.	Max.	Min.	Max.	Min.	Max.	Min.	Max.	
f_C	f_{SCK}	Clock frequency		2		5		10		20	MHz
t_{SLCH}	t_{CSS1}	$\overline{S}$ active setup time	200		60		30		15		ns
t_{SHCH}	t_{CSS2}	$\overline{S}$ not active setup time	200		60		30		15		ns
t_{SHSL}	t_{CS}	$\overline{S}$ deselect time	200		90		40		20		ns
t_{CHSH}	t_{CSH}	$\overline{S}$ active hold time	200		60		30		15		ns
t_{CHSL}		$\overline{S}$ not active hold time	200		60		30		15		ns
t_{CH} (3)	t_{CLH}	Clock high time	200		80		40		20		ns
t_{CL} (3)	t_{CLL}	Clock low time	200		80		40		20		ns
t_{CLCH} (4)	t_{RC}	Clock rise time		1		2		2		2	µs
t_{CHCL} (4)	t_{FC}	Clock fall time		1		2		2		2	µs
t_{DVCH}	t_{DSU}	Data in setup time	40		20		10		5		ns
t_{CHDX}	t_{DH}	Data in hold time	50		20		10		10		ns
t_{HHCH}		Clock low hold time after $\overline{HOLD}$ not active	140		60		30		15		ns
t_{HLCH}		Clock low hold time after $\overline{HOLD}$ active	90		60		30		15		ns
t_{CLHL}		Clock low setup time before $\overline{HOLD}$ active	0		0		0		0		ns
t_{CLHH}		Clock low setup time before $\overline{HOLD}$ not active	0		0		0		0		ns
t_{SHQZ} (4)	t_{DIS}	Output disable time		250		80		40		20	ns
t_{CLQV}	t_V	Clock low to output valid		150		80		40		20	ns
t_{CLQX}	t_{HO}	Output hold time	0		0		0		0		ns
t_{QLQH} (4)	t_{RO}	Output rise time		100		20		20		10	ns
t_{QHQL} (4)	t_{FO}	Output fall time		100		20		20		10	ns
t_{HHQV}	t_{LZ}	$\overline{HOLD}$ high to output valid		100		80		40		20	ns
t_{HLQZ} (4)	t_{HZ}	$\overline{HOLD}$ low to output High-Z		250		80		40		20	ns
t_W	t_{WC}	Write time		5		5		5		5	ms

1. Previous products are identified by process letters A.
2. New products are the M95256 devices identified by process letter K.
3. $t_{CH} + t_{CL}$ must never be less than the shortest possible clock period, $1 / f_C$(max).
4. Characterized only, not tested in production.

chanhvinh.com

Table 21. AC characteristics (M95128-DF, device grade 6)

Test conditions specified in *Table 11* and *Table 12*[1]									
		Parameter	$V_{CC} \geq 1.7$ V, $C_L \leq 100$ pF		$V_{CC} \geq 2.5$ V, $C_L \leq 30$ pF		$V_{CC} \geq 4.5$ V, $C_L \leq 30$ pF		Unit
			Min.	Max.	Min.	Max.	Min.	Max.	
f_C	f_{SCK}	Clock frequency		5		10		20	MHz
t_{SLCH}	t_{CSS1}	$\overline{S}$ active setup time	60		30		15		ns
t_{SHCH}	t_{CSS2}	$\overline{S}$ not active setup time	60		30		15		ns
t_{SHSL}	t_{CS}	$\overline{S}$ deselect time	90		40		20		ns
t_{CHSH}	t_{CSH}	$\overline{S}$ active hold time	60		30		15		ns
t_{CHSL}		$\overline{S}$ not active hold time	60		30		15		ns
t_{CH}[2]	t_{CLH}	Clock high time	80		40		20		ns
t_{CL}[3]	t_{CLL}	Clock low time	80		40		20		ns
t_{CLCH}[3]	t_{RC}	Clock rise time		2		2		2	µs
t_{CHCL}[4]	t_{FC}	Clock fall time		2		2		2	µs
t_{DVCH}	t_{DSU}	Data in setup time	20		10		5		ns
t_{CHDX}	t_{DH}	Data in hold time	20		10		10		ns
t_{HHCH}		Clock low hold time after $\overline{HOLD}$ not active	60		30		15		ns
t_{HLCH}		Clock low hold time after $\overline{HOLD}$ active	60		30		15		ns
t_{CLHL}		Clock low setup time before $\overline{HOLD}$ active	0		0		0		ns
t_{CLHH}		Clock low setup time before $\overline{HOLD}$ not active	0		0		0		ns
t_{SHQZ}[4]	t_{DIS}	Output disable time		80		40		20	ns
t_{CLQV}	t_V	Clock low to output valid		80		40		20	ns
t_{CLQX}	t_{HO}	Output hold time	0		0		0		ns
t_{QLQH}[4]	t_{RO}	Output rise time		80		20		10	ns
t_{QHQL}[4]	t_{FO}	Output fall time		80		20		10	ns
t_{HHQV}	t_{LZ}	$\overline{HOLD}$ high to output valid		80		40		20	ns
t_{HLQZ}[4]	t_{HZ}	$\overline{HOLD}$ low to output High-Z		80		40		20	ns
t_W	t_{WC}	Write time		5		5		5	ms

1. Preliminary data.
2. $t_{CH} + t_{CL}$ must never be less than the shortest possible clock period, $1 / f_C(max)$.
3. Characterized only, not tested in production.

chanhvinh.com

Figure 20. Serial input timing

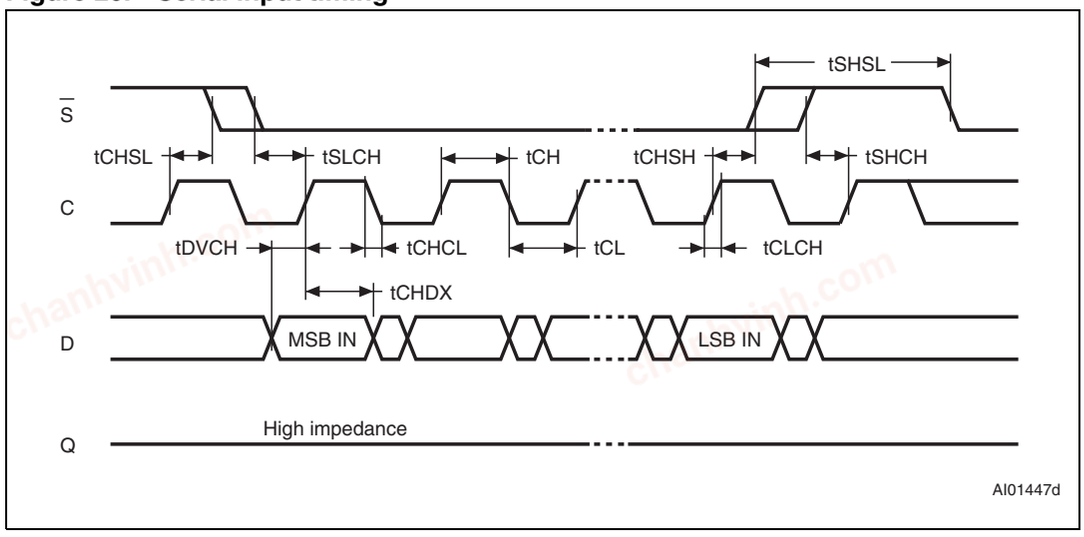

Figure 21. Hold timing

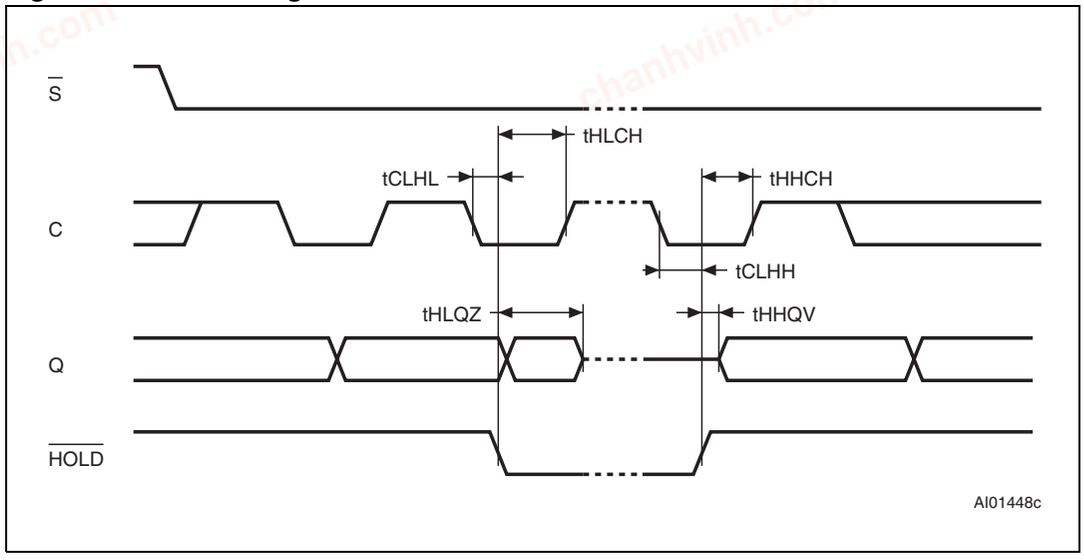

chanhvinh.com

Figure 22. Serial output timing

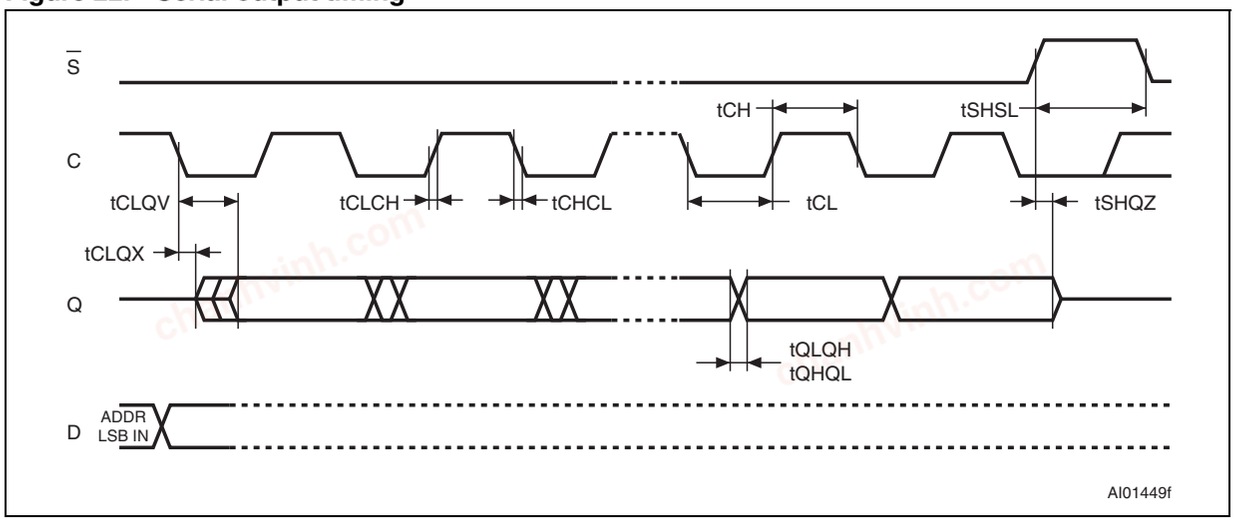

chanhvinh.com

10 Package mechanical data

In order to meet environmental requirements, ST offers these devices in different grades of ECOPACK® packages, depending on their level of environmental compliance. ECOPACK® specifications, grade definitions and product status are available at: *www.st.com*. ECOPACK® is an ST trademark.

Figure 23. SO8N – 8-lead plastic small outline, 150 mils body width, package outline

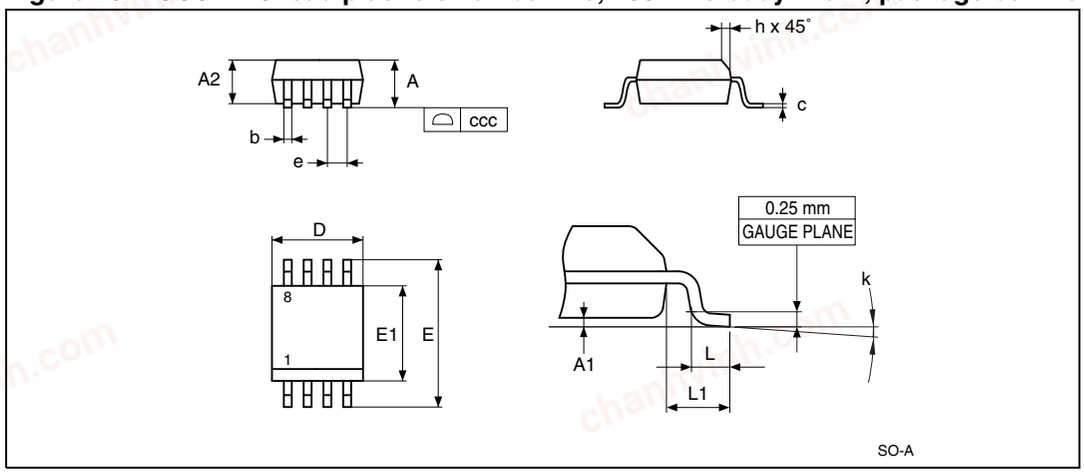

1. Drawing is not to scale.

Table 22. SO8N – 8-lead plastic small outline, 150 mils body width, mechanical data

Symbol	millimeters			inches[1]		
	Typ	Min	Max	Typ	Min	Max
A			1.750			0.0689
A1		0.100	0.250		0.0039	0.0098
A2		1.250			0.0492	
b		0.280	0.480		0.0110	0.0189
c		0.170	0.230		0.0067	0.0091
ccc			0.100			0.0039
D	4.900	4.800	5.000	0.1929	0.1890	0.1969
E	6.000	5.800	6.200	0.2362	0.2283	0.2441
E1	3.900	3.800	4.000	0.1535	0.1496	0.1575
e	1.270	-	-	0.0500	-	-
h		0.250	0.500		0.0098	0.0197
k		0°	8°		0°	8°
L		0.400	1.270		0.0157	0.0500
L1	1.040			0.0409		

1. Values in inches are converted from mm and rounded to four decimal digits.

chanhvinh.com

Figure 24. TSSOP8 – 8-lead thin shrink small outline, package outline

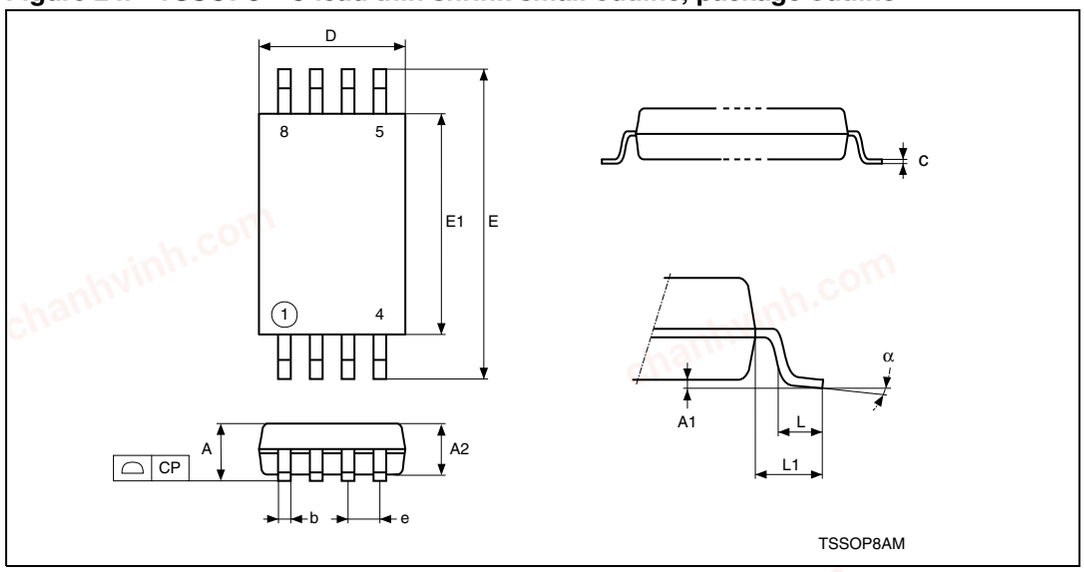

1. Drawing is not to scale.

Table 23. TSSOP8 – 8-lead thin shrink small outline, package mechanical data

Symbol	millimeters			inches[1]		
	Typ	Min	Max	Typ	Min	Max
A			1.200			0.0472
A1		0.050	0.150		0.0020	0.0059
A2	1.000	0.800	1.050	0.0394	0.0315	0.0413
b		0.190	0.300		0.0075	0.0118
c		0.090	0.200		0.0035	0.0079
CP			0.100			0.0039
D	3.000	2.900	3.100	0.1181	0.1142	0.1220
e	0.650	-	-	0.0256	-	-
E	6.400	6.200	6.600	0.2520	0.2441	0.2598
E1	4.400	4.300	4.500	0.1732	0.1693	0.1772
L	0.600	0.450	0.750	0.0236	0.0177	0.0295
L1	1.000			0.0394		
α		0°	8°		0°	8°
N	8			8		

1. Values in inches are converted from mm and rounded to four decimal digits.

chanhvinh.com

Figure 25. UFDFPN8 (MLP8) – 8-lead ultra thin fine pitch dual flat no lead, package outline

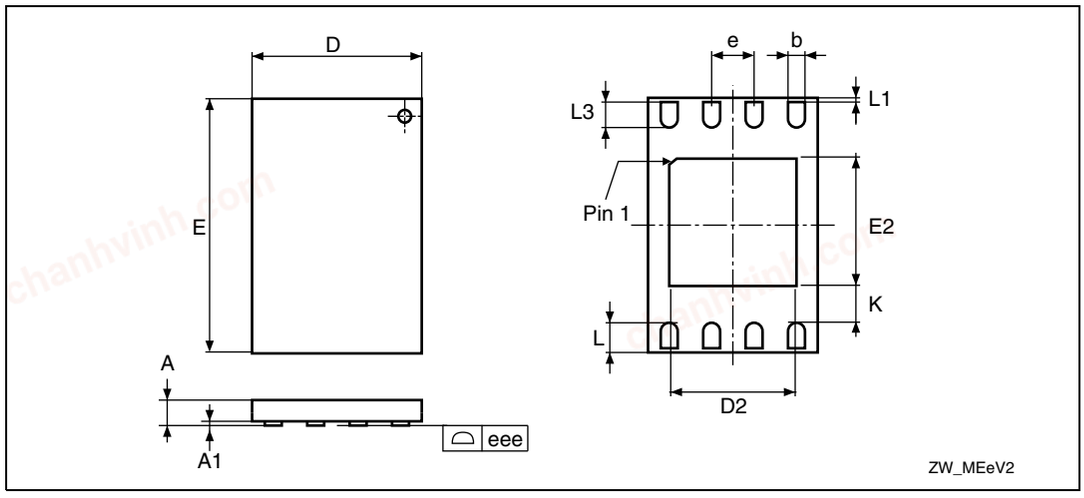

1. Drawing is not to scale.
2. The central pad (area E2 by D2 in the above illustration) is internally pulled to V_{SS}. It must not be connected to any other voltage or signal line on the PCB, for example during the soldering process.

Table 24. UFDFPN8 (MLP8) – 8-lead ultra thin fine pitch dual flat package no lead 2 x 3 mm, data

Symbol	millimeters			inches[1]		
	Typ	Min	Max	Typ	Min	Max
A	0.550	0.450	0.600	0.0217	0.0177	0.0236
A1	0.020	0.000	0.050	0.0008	0.0000	0.0020
b	0.250	0.200	0.300	0.0098	0.0079	0.0118
D	2.000	1.900	2.100	0.0787	0.0748	0.0827
D2 (rev MC)		1.200	1.600		0.0472	0.0630
E	3.000	2.900	3.100	0.1181	0.1142	0.1220
E2 (rev MC)		1.200	1.600		0.0472	0.0630
e	0.500			0.0197		
K (rev MC)		0.300			0.0118	
L		0.300	0.500		0.0118	0.0197
L1			0.150			0.0059
L3		0.300			0.0118	
eee[2]		0.080			0.0031	

1. Values in inches are converted from mm and rounded to four decimal digits.
2. Applied for exposed die paddle and terminals. Exclude embedding part of exposed die paddle from measuring.

chanhvinh.com

Figure 26. M95128-DFCS6TP/K, WLCSP 8-bump wafer-level chip scale package outline

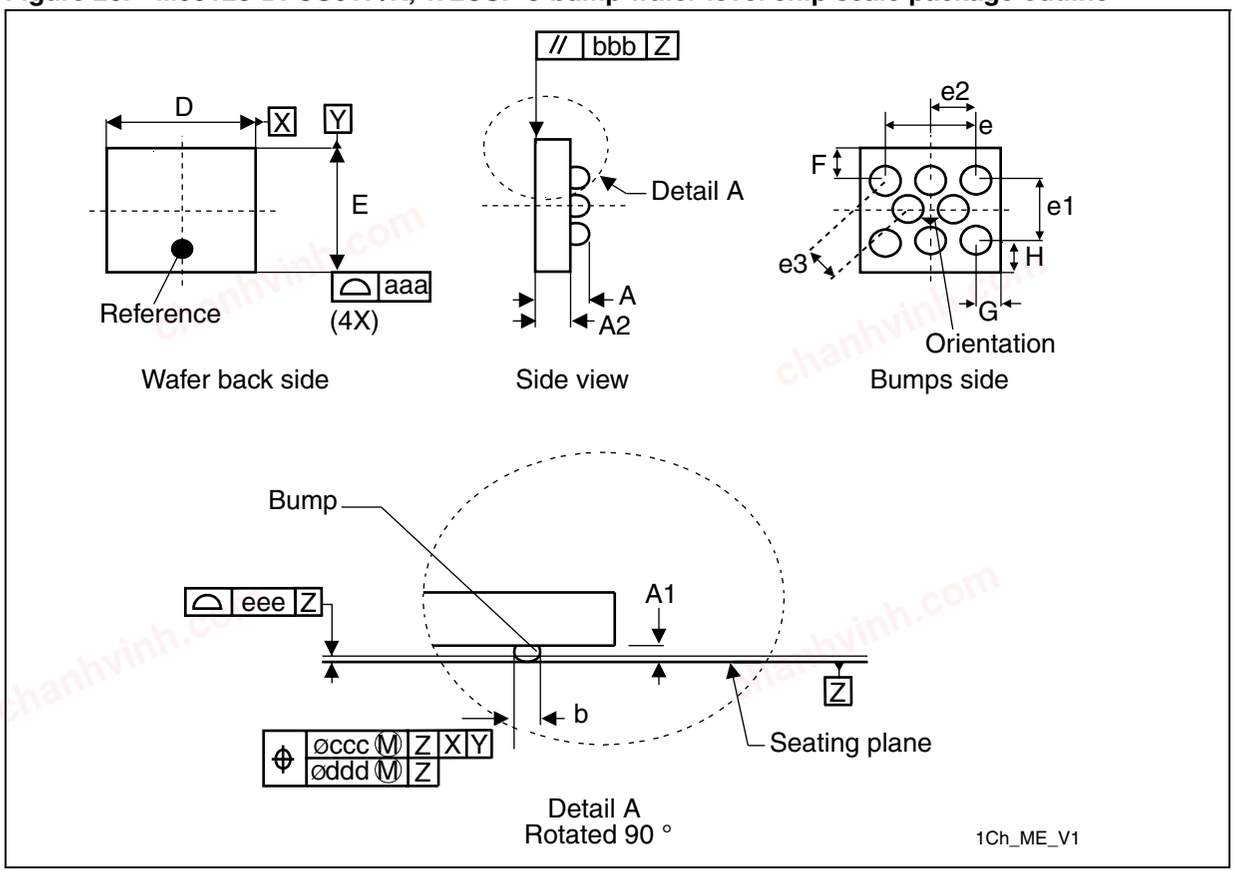

1. Drawing is not to scale.

chanhvinh.com

Table 25. M95128-DFCS6TP/K, WLCSP 8-bump wafer-level chip scale package mechanical data

Symbol	millimeters			inches[1]		
	Typ	Min	Max	Typ	Min	Max
A	0.540	0.500	0.580	0.0213	0.0197	0.0228
A1	0.190			0.0075		
A2	0.350			0.0138		
b	0.270			0.0106		
D	1.271			0.0500		
E	1.081			0.0425		
e	0.800			0.0315		
e1	0.693			0.0273		
e2	0.400			0.0157		
e3	0.400			0.0157		
F	0.184			0.0072		
G	0.236			0.0093		
H	0.194			0.0076		
N (number of terminals)	8			8		
aaa	0.110			0.0043		
bbb	0.110			0.0043		
ccc	0.110			0.0043		
ddd	0.060			0.0024		
eee	0.060			0.0024		

1. Values in inches are converted from mm and rounded to four decimal digits.

chanhvinh.com

11 Part numbering

Table 26. Ordering information scheme

Example: M95128-D W MN 6 T P /K

Device type

M95 = SPI serial access EEPROM

Device function

128 = 128 Kbit (16384 x 8)

Device family

Blank = Without Identification page

D = With additional Identification page

Operating voltage

W = V_{CC} = 2.5 to 5.5 V

R = V_{CC} = 1.8 to 5.5 V

F = V_{CC} = 1.7 to 5.5 V

Package(1)

MN = SO8 (150 mil width)

DW = TSSOP8 (169 mil width)

MC = UFDFPN8 (MLP8)

CS = WLCSP

Device grade

6 = Industrial temperature range, –40 to 85 °C.
Device tested with standard test flow

Option

blank = Standard packing

T = Tape and reel packing

Plating technology

G or P = RoHS compliant and halogen-free
(ECOPACK®)

Process(2)

/K= Manufacturing technology code

1. All packages are ECOPACK2® (RoHS compliant and halogen-free).
2. The process letters apply to WLCSP devices only. The process letters appear on the device package (marking) and on the shipment box. Please contact your nearest ST Sales Office for further information.

chanhvinh.com

12 Revision history

Table 27. Document revision history

Date	Revision	Changes
17-Feb-2009	11	*Section 3.8: Supply voltage (V_{CC})* and *Section 5.4: Write Status Register (WRSR)* updated. Note added to *Section 5.6: Write to Memory Array (WRITE)*. I_{CC} modified in *Table 12: DC characteristics (M95128, device grade 3)*. V_{RES} added to DC characteristics tables *12*, *20*, *14* and *23*. Note added to *Table 36: AC characteristics (M95080-R, M95080-DR device grade 6)*. Note added below *Figure 20: UFDFPN8, 8-lead ultra thin fine pitch dual flat package no lead 2 x 3 mm, outline*. Small text changes.
12-Jan-2010	12	*Section 5.6.1: ECC (error correction code) and write cycling* modified (applies to all devices). T_{LEAD}, I_{OL} and I_{OH} added to *Table 6: Absolute maximum ratings*. Note added to *Table 23: DC characteristics (current and new M95080-R and M95080-DR products)*. *Process* modified in *Table 45: Ordering information scheme*. All packages are ECOPACK2 compliant.
02-Mar-2010	13	*Section 5.6.1: ECC (error correction code) and write cycling* and *Table 24: Available M95128x products (package, voltage range, temperature grade)* updated.
03-Jan-2012	14	Updated UFDFPN8 package data.
06-Aug-2012	15	Datasheet revision 14 split into: - M95128-125 datasheet for automotive products (range 3), - M95128-W M95128-R M95128-DF (this datasheet) for standard products (range 6). Updated: – Cycling: 4 million cycles – Data retention: 200 years – Max clock frequency: 5 MHz@1.7 V, 10 MHz@2.5 V, 20 MHz@4.5 V. Added: – Identification page (for M95128-D devices) – 1.7 V/5.5 V range (F suffix)
19-Dec-2012	16	– Added “Additional Write lockable page (Identification page)” and replaced “(ECOPACK®)” with “(ECOPACK2®)” in *Features*. – Updated *Table 2: Write-protected block size*. – Updated *Section 7.2: Initial delivery state*. – Replaced *Figure 25* and *Table 24* (UFDFPN8 package). – Added Note (1) to *Table 26: Ordering information scheme*.

chanhvinh.com

Please Read Carefully:

Information in this document is provided solely in connection with ST products. STMicroelectronics NV and its subsidiaries (“ST”) reserve the right to make changes, corrections, modifications or improvements, to this document, and the products and services described herein at any time, without notice.

All ST products are sold pursuant to ST’s terms and conditions of sale.

Purchasers are solely responsible for the choice, selection and use of the ST products and services described herein, and ST assumes no liability whatsoever relating to the choice, selection or use of the ST products and services described herein.

No license, express or implied, by estoppel or otherwise, to any intellectual property rights is granted under this document. If any part of this document refers to any third party products or services it shall not be deemed a license grant by ST for the use of such third party products or services, or any intellectual property contained therein or considered as a warranty covering the use in any manner whatsoever of such third party products or services or any intellectual property contained therein.

UNLESS OTHERWISE SET FORTH IN ST’S TERMS AND CONDITIONS OF SALE ST DISCLAIMS ANY EXPRESS OR IMPLIED WARRANTY WITH RESPECT TO THE USE AND/OR SALE OF ST PRODUCTS INCLUDING WITHOUT LIMITATION IMPLIED WARRANTIES OF MERCHANTABILITY, FITNESS FOR A PARTICULAR PURPOSE (AND THEIR EQUIVALENTS UNDER THE LAWS OF ANY JURISDICTION), OR INFRINGEMENT OF ANY PATENT, COPYRIGHT OR OTHER INTELLECTUAL PROPERTY RIGHT.

UNLESS EXPRESSLY APPROVED IN WRITING BY TWO AUTHORIZED ST REPRESENTATIVES, ST PRODUCTS ARE NOT RECOMMENDED, AUTHORIZED OR WARRANTED FOR USE IN MILITARY, AIR CRAFT, SPACE, LIFE SAVING, OR LIFE SUSTAINING APPLICATIONS, NOR IN PRODUCTS OR SYSTEMS WHERE FAILURE OR MALFUNCTION MAY RESULT IN PERSONAL INJURY, DEATH, OR SEVERE PROPERTY OR ENVIRONMENTAL DAMAGE. ST PRODUCTS WHICH ARE NOT SPECIFIED AS "AUTOMOTIVE GRADE" MAY ONLY BE USED IN AUTOMOTIVE APPLICATIONS AT USER’S OWN RISK.

Resale of ST products with provisions different from the statements and/or technical features set forth in this document shall immediately void any warranty granted by ST for the ST product or service described herein and shall not create or extend in any manner whatsoever, any liability of ST.

ST and the ST logo are trademarks or registered trademarks of ST in various countries.

Information in this document supersedes and replaces all information previously supplied.

The ST logo is a registered trademark of STMicroelectronics. All other names are the property of their respective owners.

© 2012 STMicroelectronics - All rights reserved

STMicroelectronics group of companies

Australia - Belgium - Brazil - Canada - China - Czech Republic - Finland - France - Germany - Hong Kong - India - Israel - Italy - Japan - Malaysia - Malta - Morocco - Philippines - Singapore - Spain - Sweden - Switzerland - United Kingdom - United States of America

www.st.com