chanhvinh.com

L6228

DMOS driver for bipolar stepper motor

Datasheet - production data

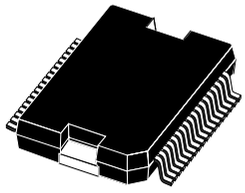

PowerSO36

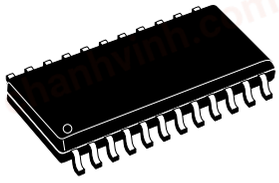

SO24
(20 + 2 + 2)

Ordering numbers:

L6228PD (PowerSO36)
L6228D (SO24)

Features

- Operating supply voltage from 8 to 52 V
- 2.8 A output peak current (1.4 A RMS)
- $R_{DS(ON)}$ 0.73 Ω typ. value at T_j = 25 °C
- Operating frequency up to 100 KHz
- Non-dissipative overcurrent protection
- Dual independent constant t_{OFF} PWM current controllers
- Fast/slow decay mode selection
- Fast decay quasi-synchronous rectification
- Decoding logic for stepper motor full and half step drive
- Cross conduction protection
- Thermal shutdown
- Undervoltage lockout
- Integrated fast freewheeling diodes

Application

Bipolar stepper motor

Description

The L6228 device is a DMOS fully integrated stepper motor driver with non-dissipative overcurrent protection, realized in BCD technology, which combines isolated DMOS power transistors with CMOS and bipolar circuits on the same chip. The device includes all the circuitry needed to drive a two phase bipolar stepper motor including: a dual DMOS full bridge, the constant off time PWM current controller that performs the chopping regulation and the phase sequence generator, that generates the stepping sequence. Available in PowerSO36 and SO24 (20 + 2 + 2) packages, the L6228 device features a non-dissipative overcurrent protection on the high-side power MOSFETs and thermal shutdown.

This is information on a product in full production. www.st.com

chanhvinh.com

Contents

1 **Block diagram** 3

2 **Maximum ratings** 4

3 **Pin connections** 6

4 **Electrical characteristics** 9

5 **Circuit description** 13

5.1 Power stages and charge pump 13

5.2 Logic inputs 14

6 **PWM current control** 15

7 **Decay modes** 19

7.1 Stepping sequence generation 20

7.2 Half step mode 20

7.3 Normal drive mode (full step two phase on) 20

7.4 Wave drive mode (full step one phase on) 20

7.5 Non-dissipative overcurrent protection 21

7.6 Thermal protection 24

8 **Application information** 25

8.1 Output current capability and IC power dissipation 26

8.2 Thermal management 28

9 **Package information** 30

9.1 PowerSO36 package information 30

9.2 SO24 package information 32

10 **Revision history** 33

chanhvinh.com

1 Block diagram

Figure 1. Block diagram

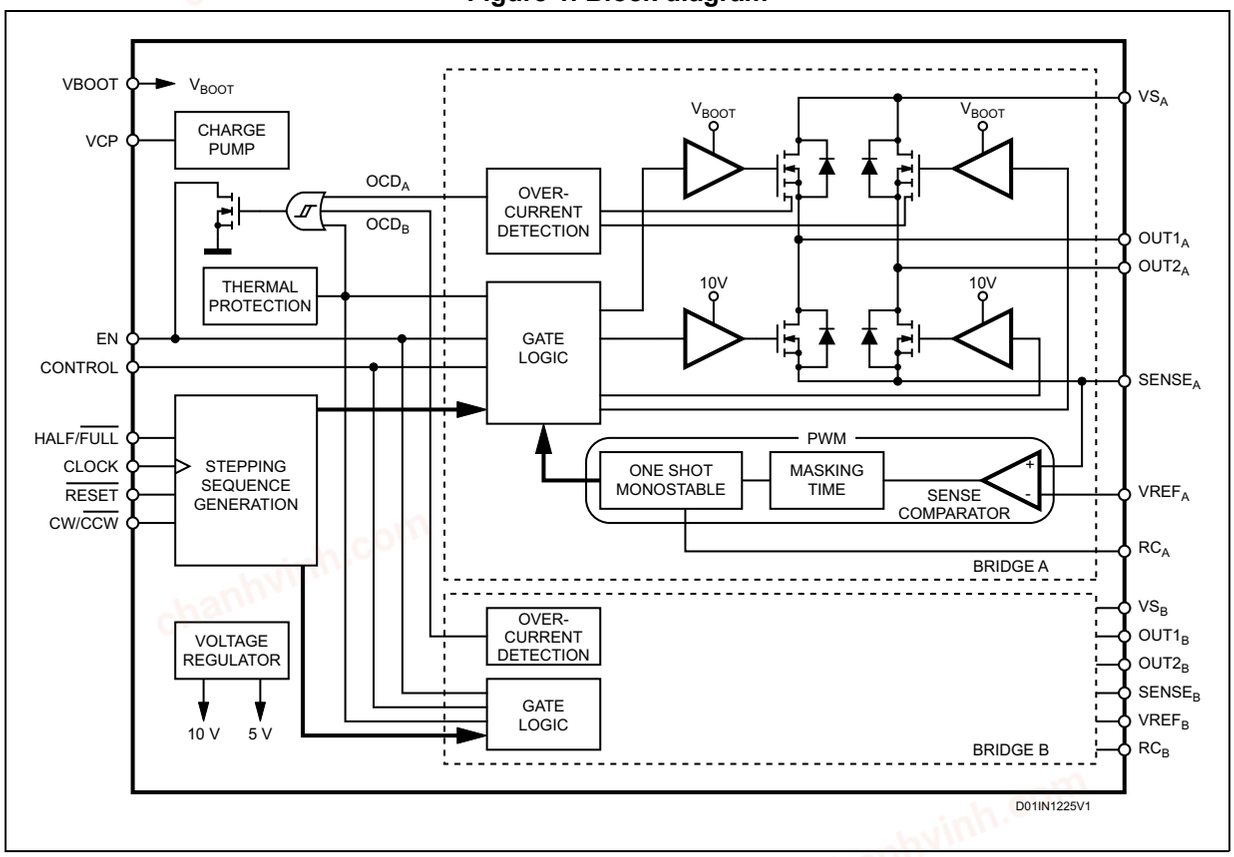

chanhvinh.com

2 Maximum ratings

Table 1. Absolute maximum ratings

Symbol	Parameter	Test conditions	Value	Unit
V_S	Supply voltage	$V_{SA} = V_{SB} = V_S$	60	V
V_{OD}	Differential voltage between VS_A, $OUT1_A$, $OUT2_A$, $SENSE_A$ and VS_B, $OUT1_B$, $OUT2_B$, $SENSE_B$	$V_{SA} = V_{SB} = V_S$ = 60 V; $V_{SENSEA} = V_{SENSEB}$ = GND	60	V
V_{BOOT}	Bootstrap peak voltage	$V_{SA} = V_{SB} = V_S$	V_S + 10	V
V_{IN}, V_{EN}	Input and enable voltage range	-	-0.3 to +7	V
V_{REFA}, V_{REFB}	Voltage range at pins V_{REFA} and V_{REFB}	-	-0.3 to +7	V
V_{RCA}, V_{RCB}	Voltage range at pins RC_A and RC_B	-	-0.3 to +7	V
V_{SENSEA}, V_{SENSEB}	Voltage range at pins $SENSE_A$ and $SENSE_B$	-	-1 to +4	V
$I_{S(peak)}$	Pulsed supply current (for each V_S pin), internally limited by the overcurrent protection	$V_{SA} = V_{SB} = V_S$; t_{PULSE} < 1ms	3.55	A
I_S	RMS supply current (for each V_S pin)	$V_{SA} = V_{SB} = V_S$	1.4	A
T_{stg}, T_{OP}	Storage and operating temperature range	-	-40 to 150	°C

Table 2. Recommended operating conditions

Symbol	Parameter	Test conditions	Min.	Max.	Unit
V_S	Supply voltage	$V_{SA} = V_{SB} = V_S$	8	52	V
V_{OD}	Differential voltage between VS_A, $OUT1_A$, $OUT2_A$, $SENSE_A$ and VS_B, $OUT1_B$, $OUT2_B$, $SENSE_B$	$V_{SA} = V_{SB} = V_S$; $V_{SENSEA} = V_{SENSEB}$	-	52	V
V_{REFA}, V_{REFB}	Voltage range at pins V_{REFA} and V_{REFB}	-	-0.1	5	V
V_{SENSEA}, V_{SENSEB}	Voltage range at pins $SENSE_A$ and $SENSE_B$	(pulsed $t_W < t_{rr}$) (DC)	-6 -1	6 1	V V
I_{OUT}	RMS output current	-	-	1.4	A
f_{sw}	Switching frequency	-	-	100	KHz

chanhvinh.com

Table 3. Thermal data

Symbol	Description	SO24	PowerSO36	Unit
$R_{th\text{-}j\text{-}pins}$	Maximum thermal resistance junction pins	15	-	°C/W
$R_{th\text{-}j\text{-}case}$	Maximum thermal resistance junction case	-	2	°C/W
$R_{th\text{-}j\text{-}amb1}$	Maximum thermal resistance junction ambient(1)	55	-	°C/W
$R_{th\text{-}j\text{-}amb1}$	Maximum thermal resistance junction ambient(2)	-	36	°C/W
$R_{th\text{-}j\text{-}amb1}$	Maximum thermal resistance junction ambient(3)	-	16	°C/W
$R_{th\text{-}j\text{-}amb2}$	Maximum thermal resistance junction ambient(4)	78	63	°C/W

1. Mounted on a multi-layer FR4 PCB with a dissipating copper surface on the bottom side of 6 cm^2 (with a thickness of 35 µm).
2. Mounted on a multi-layer FR4 PCB with a dissipating copper surface on the top side of 6 cm^2 (with a thickness of 35 µm).
3. Mounted on a multi-layer FR4 PCB with a dissipating copper surface on the top side of 6 cm^2 (with a thickness of 35 µm), 16 via holes and a ground layer.
4. Mounted on a multi-layer FR4 PCB without any heat sinking surface on the board.

chanhvinh.com

3 Pin connections

Figure 2. Pin connections (top view)

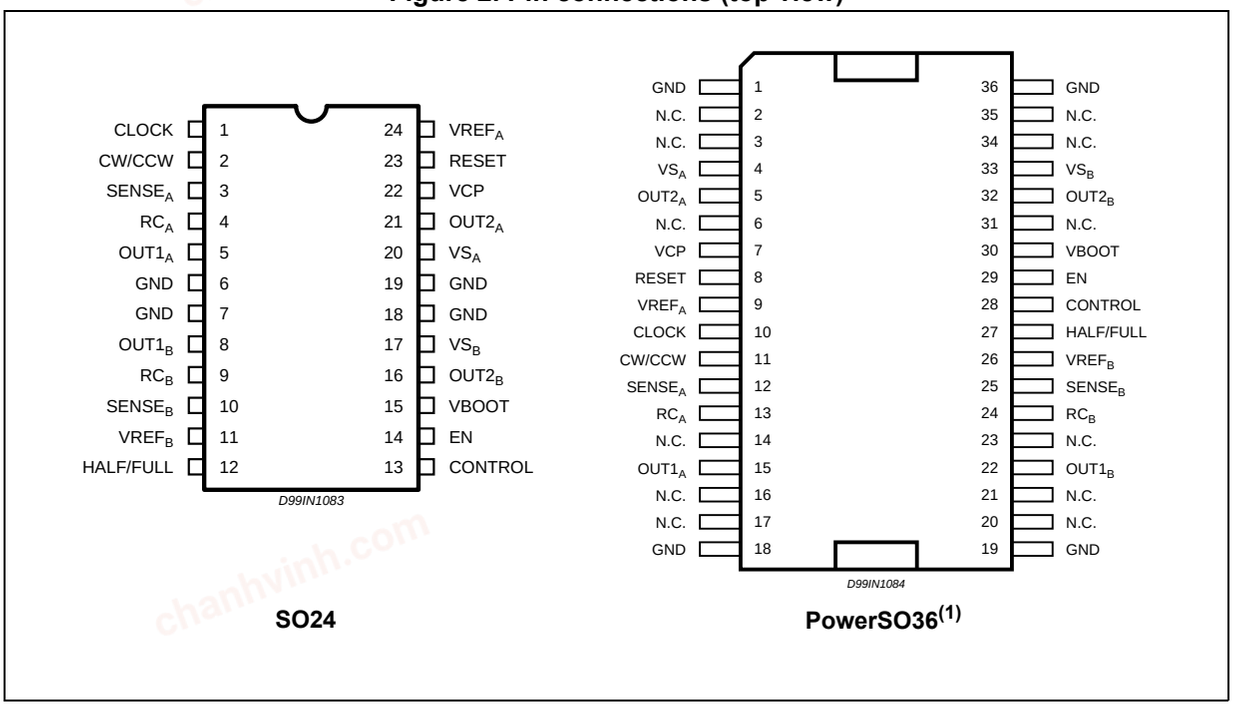

1. The slug is internally connected to pins 1, 18, 19 and 36 (GND pins).

Table 4. Pin description

Package		Name	Type	Function
SO24	PowerSO36			
Pin no.	Pin no.			
1	10	CLOCK	Logic input	Step clock input. The state machine makes one step on each rising edge.
2	11	CW/CCW	Logic input	Selects the direction of the rotation. HIGH logic level sets clockwise direction, whereas LOW logic level sets counterclockwise direction. If not used, it has to be connected to GND or +5 V.
3	12	SENSE$_A$	Power supply	Bridge A source pin. This pin must be connected to power ground through a sensing power resistor.
4	13	RC$_A$	RC pin	RC network pin. A parallel RC network connected between this pin and ground sets the current controller OFF-time of the bridge A.
5	15	OUT1$_A$	Power output	Bridge A output 1.

chanhvinh.com

Table 4. Pin description (continued)

Package		Name	Type	Function
SO24	PowerSO36			
Pin no.	Pin no.			
6, 7, 18, 19	1, 18, 19, 36	GND	GND	Ground terminals. In SO24 package, these pins are also used for heat dissipation toward the PCB. On PowerSO36 package the slug is connected to these pins.
8	22	$OUT1_B$	Power output	Bridge B output 1.
9	24	RC_B	RC pin	RC network pin. A parallel RC network connected between this pin and ground sets the current controller OFF-time of the bridge B.
10	25	$SENSE_B$	Power supply	Bridge B source pin. This pin must be connected to power ground through a sensing power resistor.
11	26	$VREF_B$	Analog input	Bridge B current controller reference voltage. Do not leave this pin open or connected to GND.
12	27	HALF/FULL	Logic input	Step mode selector. HIGH logic level sets HALF STEP mode, LOW logic level sets FULL STEP mode. If not used, it has to be connected to GND or +5 V.
13	28	CONTROL	Logic input	Decay mode selector. HIGH logic level sets SLOW DECAY mode. LOW logic level sets FAST DECAY mode. If not used, it has to be connected to GND or +5 V.
14	29	EN	Logic input(1)	Chip enable. LOW logic level switches OFF all power MOSFETs of both bridge A and bridge B. This pin is also connected to the collector of the overcurrent and thermal protection to implement overcurrent protection. If not used, it has to be connected to +5 V through a resistor.
15	30	VBOOT	Supply voltage	Bootstrap voltage needed for driving the upper power MOSFETs of both bridge A and bridge B.
16	32	$OUT2_B$	Power output	Bridge B output 2.
17	33	VS_B	Power supply	Bridge B power supply voltage. It must be connected to the supply voltage together with pin VS_A.
20	4	VS_A	Power supply	Bridge A power supply voltage. It must be connected to the supply voltage together with pin VS_B.
21	5	$OUT2_A$	Power output	Bridge A output 2.
22	7	VCP	Output	Charge pump oscillator output.

chanhvinh.com

Table 4. Pin description (continued)

Package		Name	Type	Function
SO24	PowerSO36			
Pin no.	Pin no.			
23	8	RESET	Logic input	Reset pin. LOW logic level restores the *Home* state (state 1) on the phase sequence generator state machine. If not used, it has to be connected to +5 V.
24	9	$VREF_A$	Analog input	Bridge A current controller reference voltage. Do not leave this pin open or connected to GND.

1. Also connected at the output drain of the overcurrent and thermal protection MOSFET. Therefore, it has to be driven putting in series a resistor with a value in the range of 2.2 KΩ - 180 KΩ, recommended 100 KΩ .

chanhvinh.com

4 Electrical characteristics

Table 5. Electrical characteristics
(T_{amb} = 25 °C, V_s = 48 V, unless otherwise specified)

Symbol	Parameter	Test conditions	Min.	Typ.	Max.	Unit
$V_{Sth(ON)}$	Turn-on threshold	-	5.8	6.3	6.8	V
$V_{Sth(OFF)}$	Turn-off threshold	-	5	5.5	6	V
I_S	Quiescent supply current	All bridges OFF; T_j = -25 °C to 125 °C(1)	-	5	10	mA
$T_{j(OFF)}$	Thermal shutdown temperature	-	-	165	-	°C
Output DMOS transistors						
$R_{DS(ON)}$	High-side + low-side switch ON resistance	T_j = 25 °C	-	1.47	1.69	W
		T_j = 125 °C(1)	-	2.35	2.70	W
I_{DSS}	Leakage current	EN = low; OUT = V_S	-	-	2	mA
		EN = low; OUT = GND	-0.3	-	-	mA
Source drain diodes						
V_{SD}	Forward ON voltage	I_{SD} = 1.4 A, EN = LOW	-	1.15	1.3	V
t_{rr}	Reverse recovery time	I_f = 1.4 A	-	300	-	ns
t_{fr}	Forward recovery time	-	-	200	-	ns
Logic inputs (EN, CONTROL, HALF/FULL, CLOCK, RESET, CW/CCW)						
V_{IL}	Low level logic input voltage	-	-0.3	-	0.8	V
V_{IH}	High level logic input voltage	-	2	-	7	V
I_{IL}	Low level logic input current	GND logic input voltage	-10	-	-	µA
I_{IH}	High level logic input current	7 V logic input voltage	-	-	10	µA
$V_{th(ON)}$	Turn-on input threshold	-	-	1.8	2.0	V
$V_{th(OFF)}$	Turn-off input threshold	-	0.8	1.3	-	V
$V_{th(HYS)}$	Input threshold hysteresis	-	0.25	0.5	-	V
Switching characteristics						
$t_{D(ON)EN}$	Enable to output turn-on delay time(2)	I_{LOAD} = 1.4 A, resistive load	500	650	800	ns
$t_{D(OFF)EN}$	Enable to output turn-off delay time(2)	I_{LOAD} = 1.4 A, resistive load	500	800	1000	ns
t_{RISE}	Output rise time(2)	I_{LOAD} = 1.4 A, resistive load	40	-	250	ns
t_{FALL}	Output fall time(2)	I_{LOAD} = 1.4 A, resistive load	40	-	250	ns
t_{DCLK}	Clock to output delay time(3)	I_{LOAD} = 1.4 A, resistive load	-	2	-	µs
$t_{CLK(min)L}$	Minimum clock time(4)	-	-	-	1	µs
$t_{CLK(min)H}$	Minimum clock time(4)	-	-	-	1	µs
f_{CLK}	Clock frequency	-	-	-	100	KHz

chanhvinh.com

Table 5. Electrical characteristics
(T_{amb} = 25 °C, V_S = 48 V, unless otherwise specified) (continued)

Symbol	Parameter	Test conditions	Min.	Typ.	Max.	Unit
$t_{S(MIN)}$	Minimum set-up time (5)	-	-	-	1	µs
$t_{H(MIN)}$	Minimum hold time(5)	-	-	-	1	µs
$t_{R(MIN)}$	Minimum reset time(5)	-	-	-	1	µs
$t_{RCLK(MIN)}$	Minimum reset to clock delay time(5)	-	-	-	1	µs
t_{DT}	Deadtime protection	-	0.5	1	-	µs
f_{CP}	Charge pump frequency	T_j = -25 °C to 125 °C(1)	-	0.6	1	MHz
PWM comparator and monostable						
I_{RCA}, I_{RCB}	Source current at pins RC_A and RC_B	V_{RCA} = V_{RCB} = 2.5 V	3.5	5.5	-	mA
V_{offset}	Offset voltage on sense comparator	V_{REFA}, V_{REFB} = 0.5 V	-	±5	-	mV
t_{PROP}	Turn OFF propagation delay(6)	-	-	500	-	ns
t_{BLANK}	Internal blanking time on SENSE pins	-	-	1	-	µs
$t_{ON(MIN)}$	Minimum On time		-	2.5	3	µs
t_{OFF}	PWM recirculation time	R_{OFF} = 20 KΩ; C_{OFF} = 1 nF	-	13	-	µs
		R_{OFF} = 100 KΩ; C_{OFF} = 1 nF	-	61	-	µs
I_{BIAS}	Input bias current at pins $VREF_A$ and $VREF_B$	-	-	-	10	µA
Overcurrent protection						
I_{SOVER}	Input supply overcurrent protection threshold	T_j = -25 °C to 125 °C(1)	2	2.8	3.55	A
R_{OPDR}	Open drain ON resistance	I = 4 mA	-	40	60	W
$t_{OCD(ON)}$	OCD turn-on delay time(7)	I = 4 mA; C_{EN} < 100 pF	-	200	-	ns
$t_{OCD(OFF)}$	OCD turn-off delay time(7)	I = 4 mA; C_{EN} < 100 pF	-	100	-	ns

1. Tested at 25 °C in a restricted range and guaranteed by characterization.
2. See *Figure 3: Switching characteristic definition*.
3. See *Figure 4: Clock to output delay time*.
4. See *Figure 5: Minimum timing definition; clock input*.
5. See *Figure 6: Minimum timing definition; logic inputs*.
6. Measured applying a voltage of 1 V to pin SENSE and a voltage drop from 2 V to 0 V to pin VREF.
7. See *Figure 7: Overcurrent detection timing definition*.

chanhvinh.com

Figure 3. Switching characteristic definition

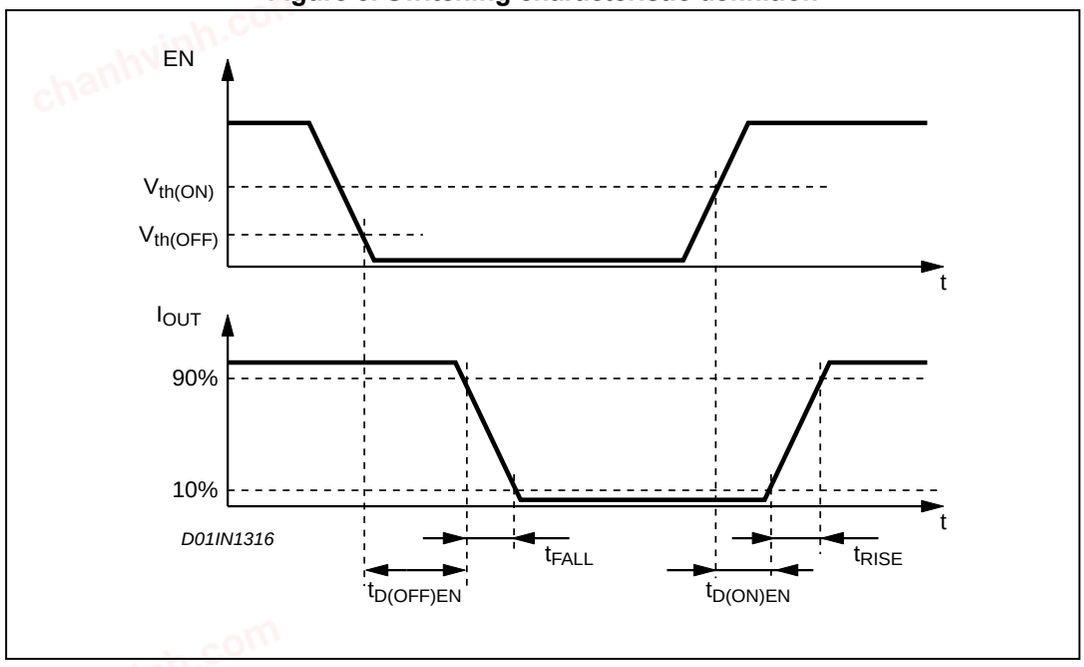

Figure 4. Clock to output delay time

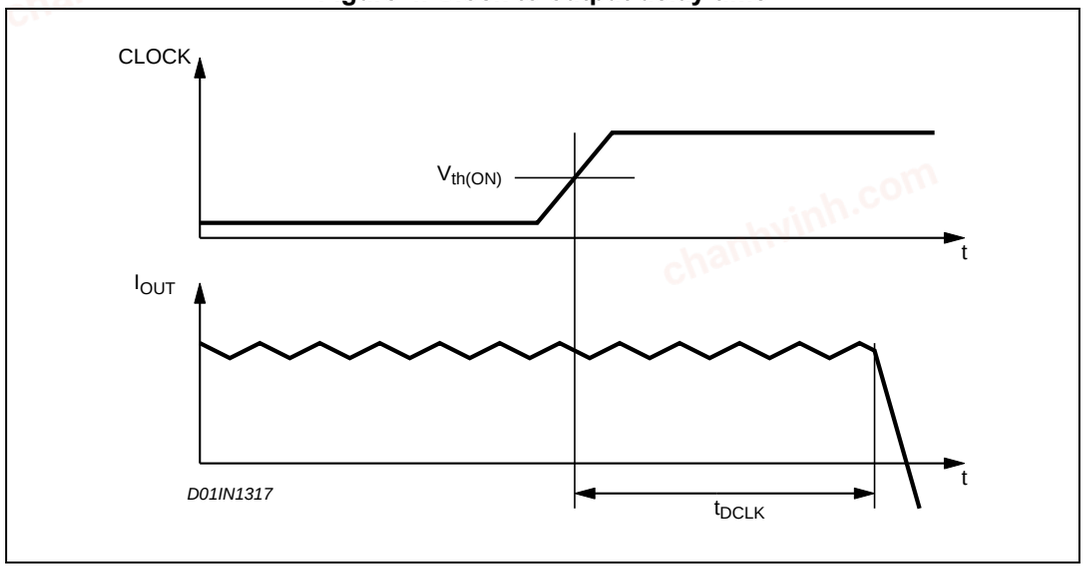

Figure 5. Minimum timing definition; clock input

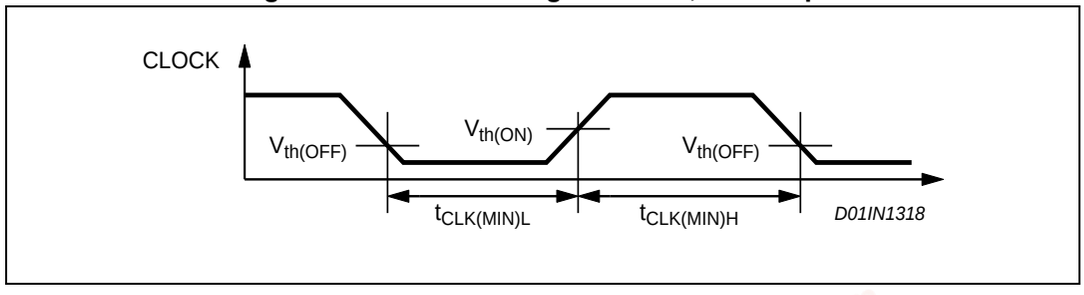

chanhvinh.com

Figure 6. Minimum timing definition; logic inputs

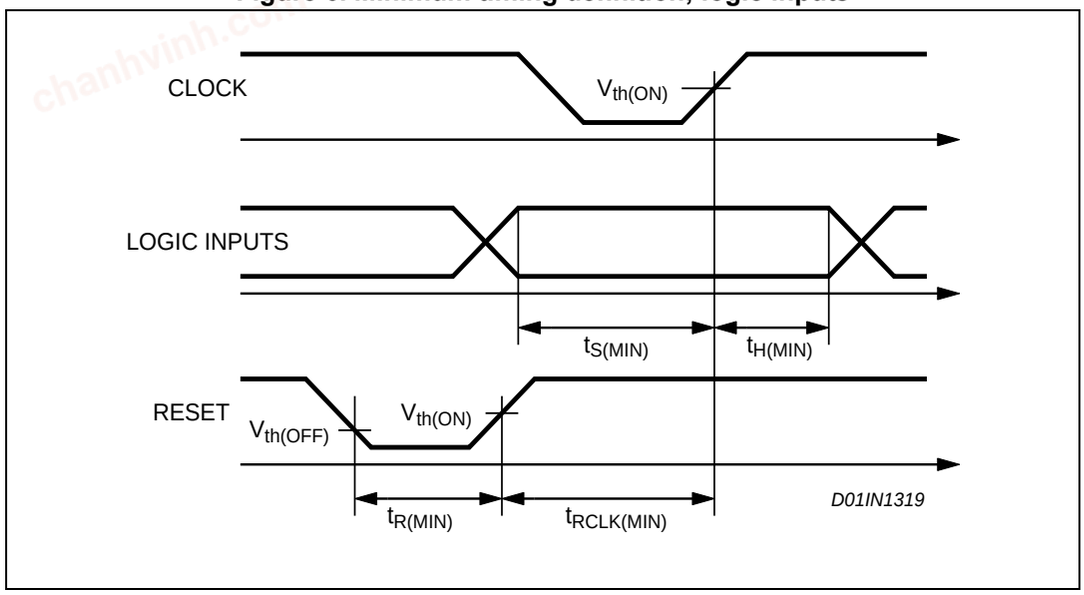

Figure 7. Overcurrent detection timing definition

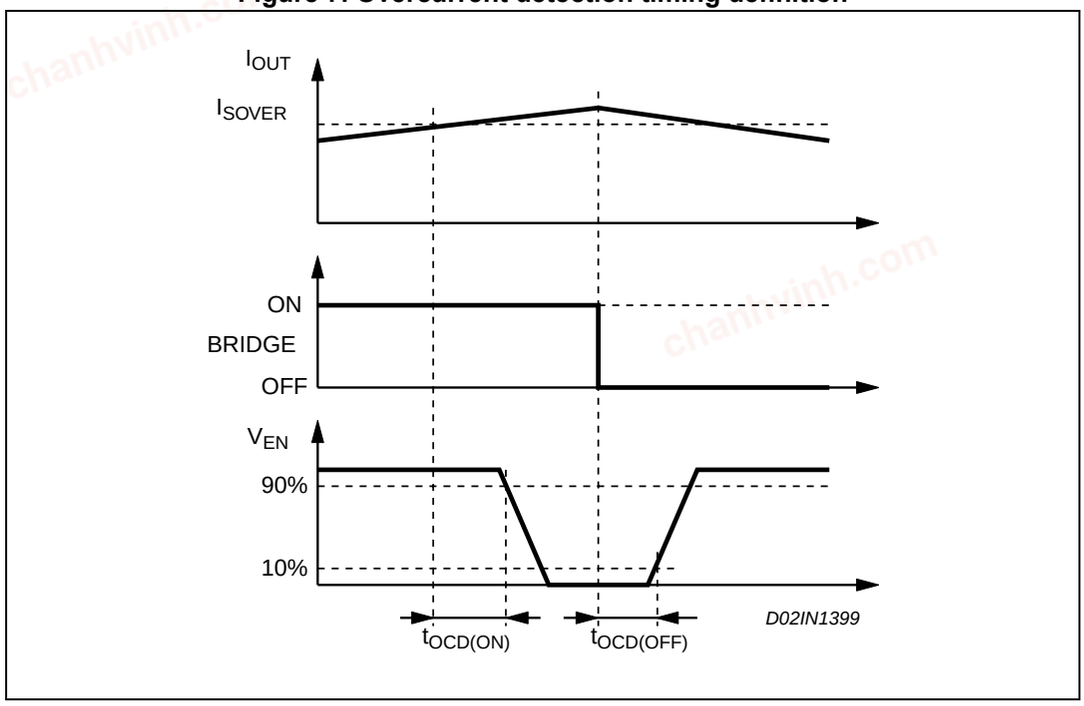

chanhvinh.com

5 Circuit description

5.1 Power stages and charge pump

The L6228device integrates two independent power MOS full bridges. Each power MOS has an $R_{DS(ON)}$ = 0.73 Ω (typical value at 25 °C), with intrinsic fast freewheeling diode. Switching patterns are generated by the PWM current controller and the phase sequence generator (see *Section 6*). Cross conduction protection is achieved using a deadtime (t_{DT} = 1 µs typical value) between the switch off and switch on of two power MOSFETs in one leg of a bridge.

Pins VS_A and VS_B MUST be connected together to the supply voltage V_S. The device operates with a supply voltage in the range from 8 V to 52 V. It has to be noticed that the $R_{DS(ON)}$ increases of some percents when the supply voltage is in the range from 8 V to 12 V.

Using N-channel power MOS for the upper transistors in the bridge requires a gate drive voltage above the power supply voltage. The bootstrapped supply voltage V_{BOOT} is obtained through an internal oscillator and few external components to realize a charge pump circuit as shown in *Figure 8*. The oscillator output (VCP) is a square wave at 600 KHz (typical) with 10 V amplitude. Recommended values/part numbers for the charge pump circuit are shown in *Table 6*.

Table 6. Charge pump external components values

Component	Value
C_{BOOT}	220 nF
C_P	10 nF
R_P	100 Ω
D1	1N4148
D2	1N4148

Figure 8. Charge pump circuit

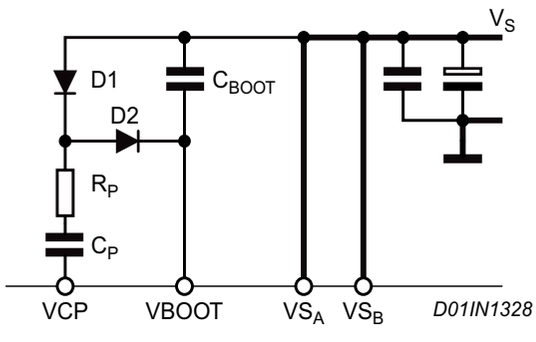

chanhvinh.com

5.2 Logic inputs

Pins CONTROL, HALF/FULL, CLOCK, RESET and CW/CCW are TTL/CMOS compatible logic inputs. The internal structure is shown in *Figure 9*. Typical value for turn-on and turn-off thresholds are respectively $V_{th(ON)}$ = 1.8 V and $V_{th(OFF)}$ = 1.3 V.

Pin EN (“Enable”) has identical input structure with the exception that the drain of the overcurrent and thermal protection MOSFET is also connected to this pin. Due to this connection some care needs to be taken in driving this pin. The EN input may be driven in one of two configurations as shown in *Figure 10* or *Figure 11*. If driven by an open drain (collector) structure, a pull-up resistor R_{EN} and a capacitor C_{EN} are connected as shown in *Figure 10*. If the driver is a standard Push-Pull structure the resistor R_{EN} and the capacitor C_{EN} are connected as shown in *Figure 11*. The resistor R_{EN} should be chosen in the range from 2.2 KΩ to 180 KΩ. Recommended values for R_{EN} and C_{EN} are respectively 100 KΩ and 5.6 nF. More information on selecting the values is found in *Section 7.5: Non-dissipative overcurrent protection on page 21*.

Figure 9. Logic inputs internal structure

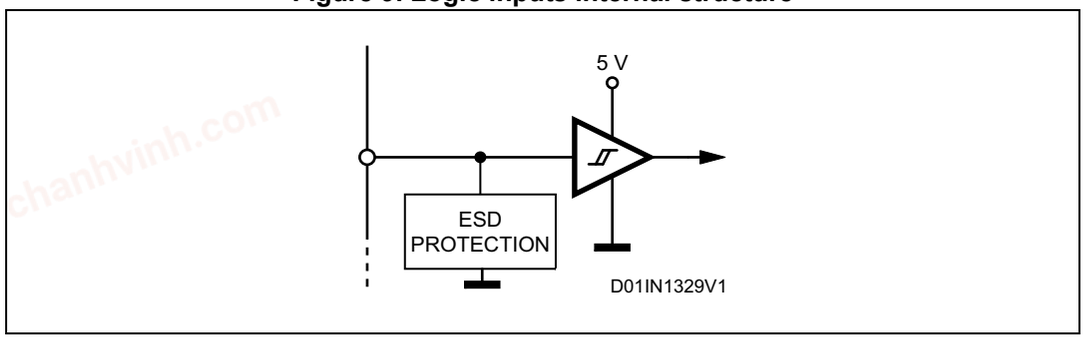

Figure 10. EN pin open collector driving

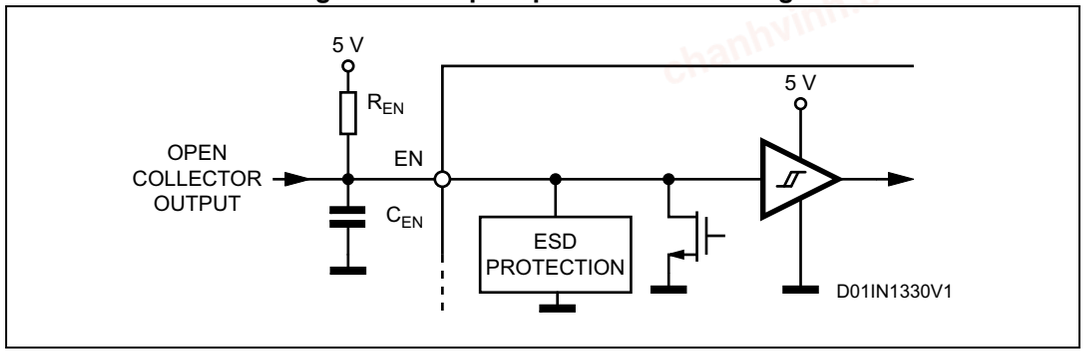

Figure 11. EN pin push-pull driving

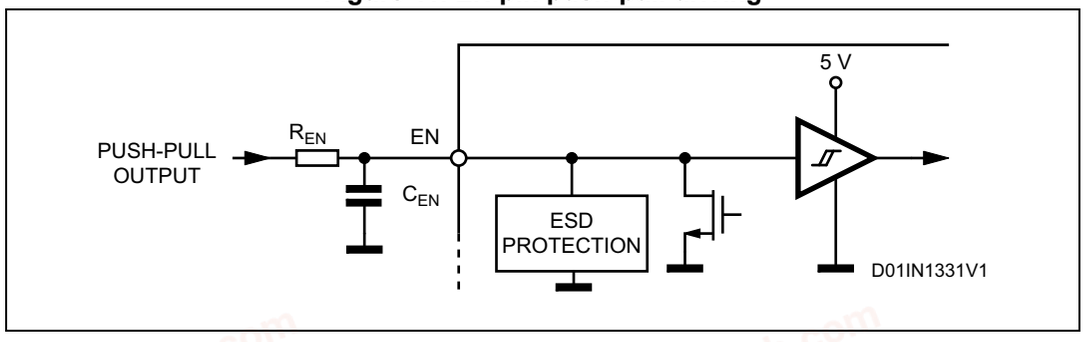

chanhvinh.com

6 PWM current control

The L6228device includes a constant off time PWM current controller for each of the two bridges. The current control circuit senses the bridge current by sensing the voltage drop across an external sense resistor connected between the source of the two lower power MOS transistors and ground, as shown in *Figure 12*. As the current in the motor builds up the voltage across the sense resistor increases proportionally. When the voltage drop across the sense resistor becomes greater than the voltage at the reference input ($VREF_A$ or $VREF_B$) the sense comparator triggers the monostable switching the bridge off. The power MOS remains off for the time set by the monostable and the motor current recirculates as defined by the selected decay mode, described in *Section 7: Decay modes on page 19*. When the monostable times out the bridge will again turn on. Since the internal deadtime, used to prevent cross conduction in the bridge, delays the turn on of the power MOS, the effective off time is the sum of the monostable time plus the deadtime.

Figure 12. PWM current controller simplified schematic

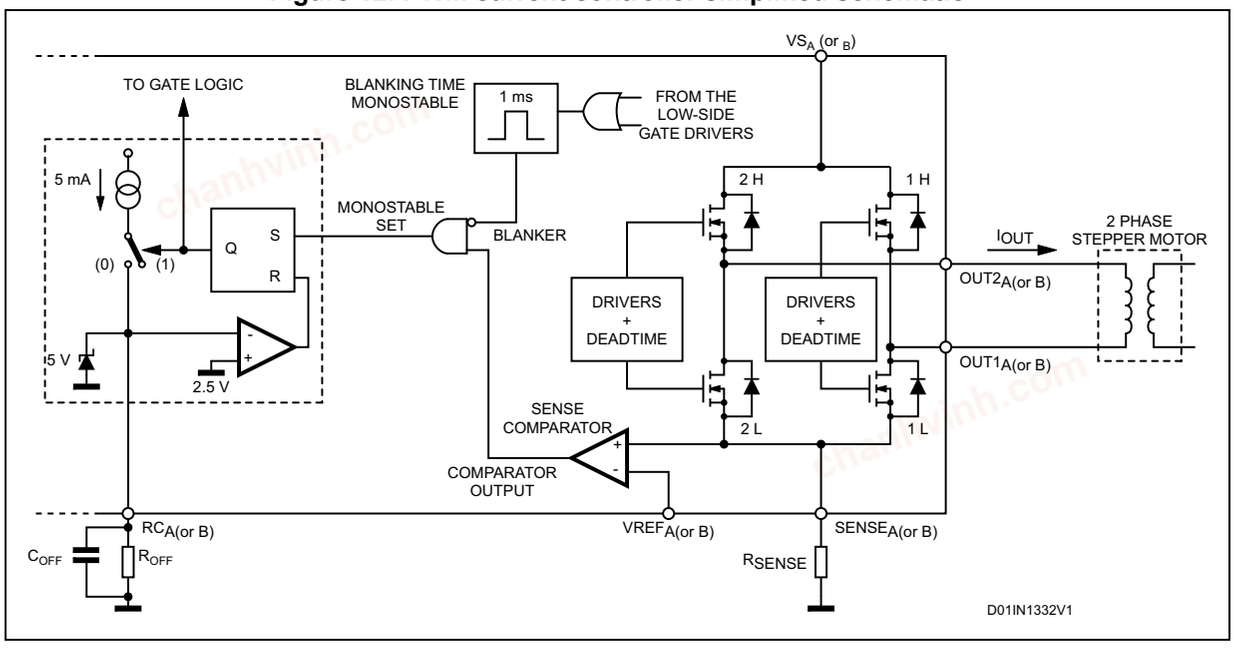

Figure 13 shows the typical operating waveforms of the output current, the voltage drop across the sensing resistor, the RC pin voltage and the status of the bridge. More details regarding the synchronous rectification and the output stage configuration are included in *Section 7: Decay modes on page 19*.

Immediately after the power MOS turns on, a high peak current flows through the sensing resistor due to the reverse recovery of the freewheeling diodes. The L6228 device provides a 1 µs blanking time t_{BLANK} that inhibits the comparator output so that this current spike cannot prematurely retrigger the monostable.

chanhvinh.com

Figure 13. Output current regulation waveforms

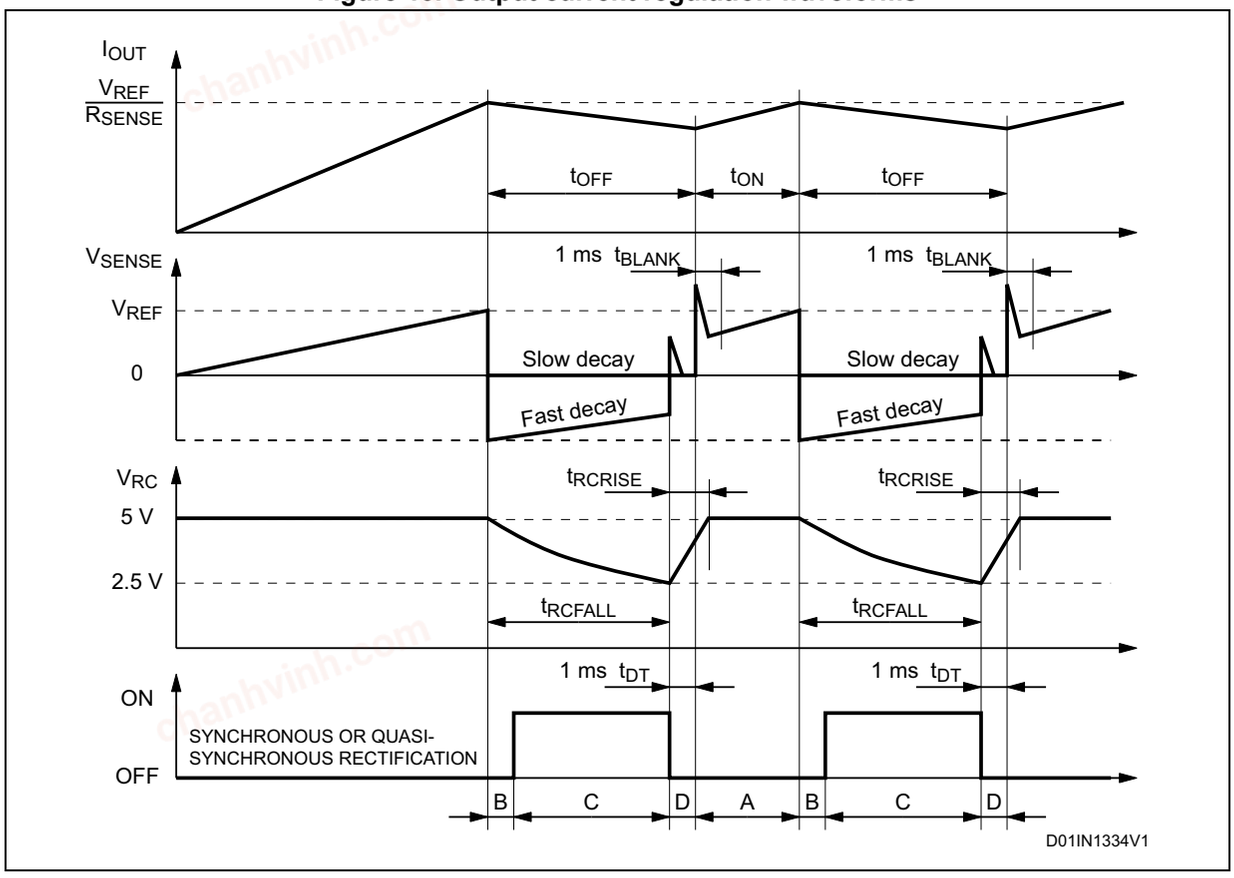

Figure 14 shows the magnitude of the off time t_{OFF} versus C_{OFF} and R_{OFF} values. It can be approximately calculated from the equations:

Equation 1

$$t_{RCFALL} = 0.6 \cdot R_{OFF} \cdot C_{OFF}$$

$$t_{OFF} = t_{RCFALL} + t_{DT} = 0.6 \cdot R_{OFF} \cdot C_{OFF} + t_{DT}$$

where R_{OFF} and C_{OFF} are the external component values and t_{DT} is the internally generated deadtime with:

Equation 2

$$20\ K\Omega \leq R_{OFF} \leq 100\ K\Omega$$

$$0.47\ nF \leq C_{OFF} \leq 100\ nF$$

$$t_{DT} = 1\ \mu s \text{ (typical value)}$$

Therefore:

Equation 3

$$t_{OFF(MIN)} = 6.6\ \mu s$$

$$t_{OFF(MAX)} = 6\ ms$$

These values allow a sufficient range of t_{OFF} to implement the drive circuit for most motors.

chanhvinh.com

The capacitor value chosen for C_{OFF} also affects the rise time t_{RCRISE} of the voltage at the pin RCOFF. The rise time t_{RCRISE} will only be an issue if the capacitor is not completely charged before the next time the monostable is triggered. Therefore, the on time t_{ON}, which depends by motors and supply parameters, has to be bigger than t_{RCRISE} for allowing a good current regulation by the PWM stage. Furthermore, the on time t_{ON} can not be smaller than the minimum on time $t_{ON(MIN)}$.

Equation 4

$$\begin{cases} t_{ON} > t_{ON(MIN)} = 2.5\mu s \text{ (typ. value)} \\ t_{ON} > t_{RCRISE} - t_{DT} \end{cases}$$
$$t_{RCRISE} = 600 \cdot C_{OFF}$$

Figure 15 shows the lower limit for the on time t_{ON} for having a good PWM current regulation capacity. It has to be said that t_{ON} is always bigger than $t_{ON(MIN)}$ because the device imposes this condition, but it can be smaller than t_{RCRISE} - t_{DT}. In this last case the device continues to work but the off time t_{OFF} is not more constant.

So, small C_{OFF} value gives more flexibility for the applications (allows smaller on time and, therefore, higher switching frequency), but, the smaller is the value for C_{OFF}, the more influential will be the noises on the circuit performance.

Figure 14. t_{OFF} versus C_{OFF} and R_{OFF}

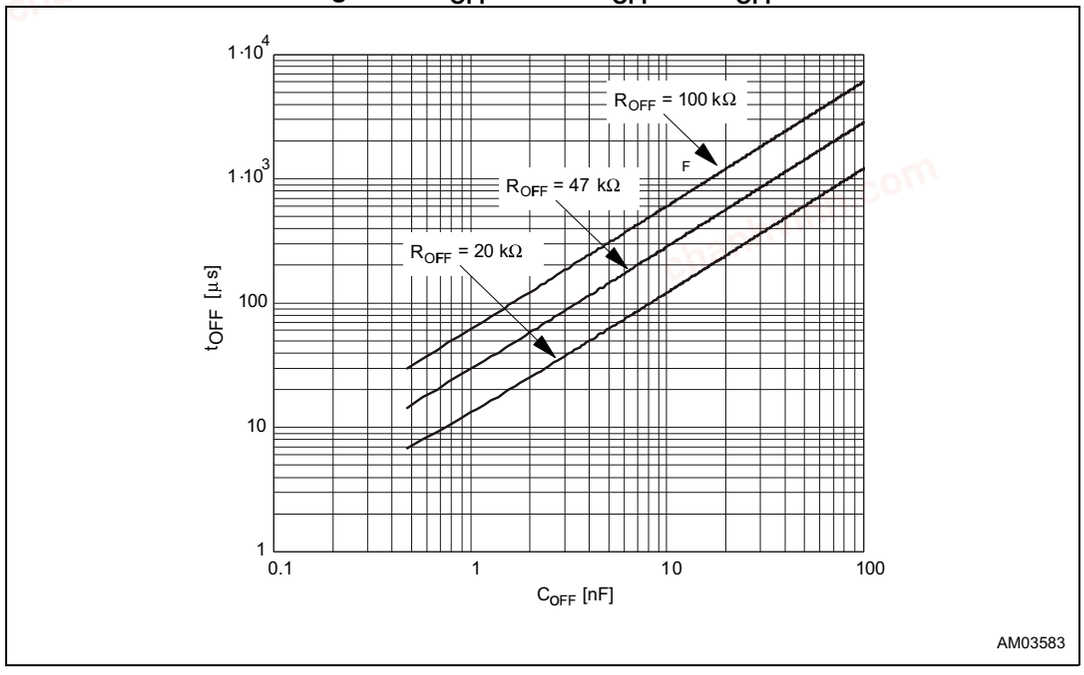

chanhvinh.com

Figure 15. Area where t_{ON} can vary maintaining the PWM regulation

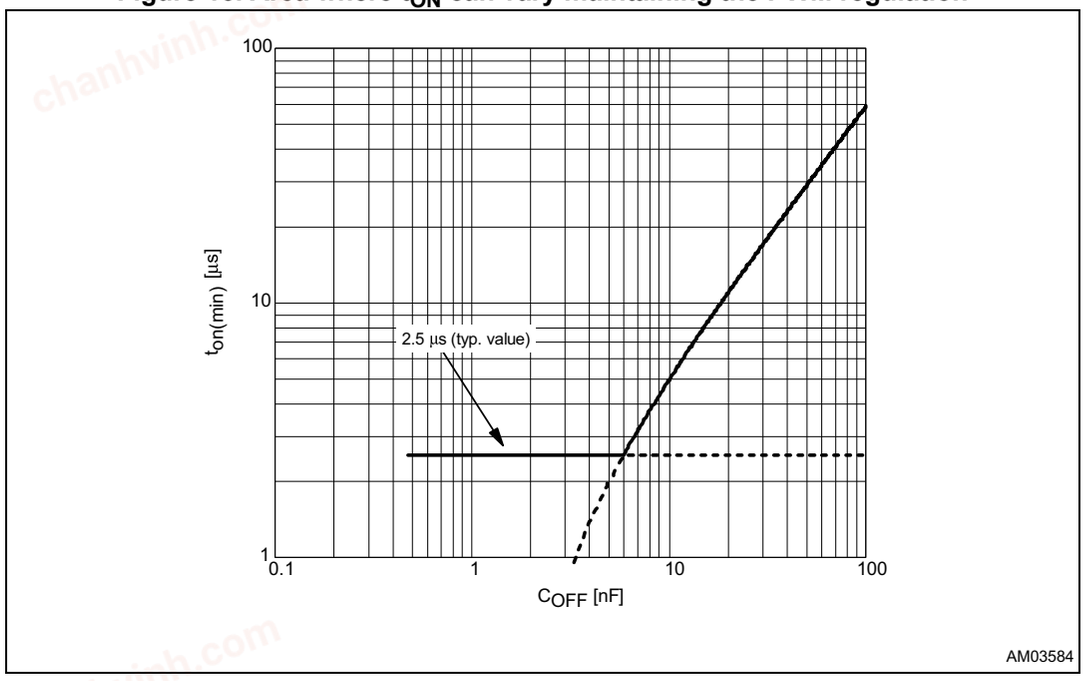

chanhvinh.com

7 Decay modes

The CONTROL input is used to select the behavior of the bridge during the off time. When the CONTROL pin is low, the fast decay mode is selected and both transistors in the bridge are switched off during the off time. When the CONTROL pin is high, the slow decay mode is selected and only the low-side transistor of the bridge is switched off during the off time.

Figure 16 shows the operation of the bridge in the fast decay mode. At the start of the off time, both of the power MOS are switched off and the current recirculates through the two opposite freewheeling diodes. The current decays with a high di/dt since the voltage across the coil is essentially the power supply voltage. After the deadtime, the lower power MOS in parallel with the conducting diode is turned on in synchronous rectification mode. In applications where the motor current is low it is possible that the current can decay completely to zero during the off time. At this point if both of the power MOS were operating in the synchronous rectification mode it would then be possible for the current to build in the opposite direction. To prevent this only the lower power MOS is operated in synchronous rectification mode. This operation is called “Quasi-synchronous rectification mode”. When the monostable times out, the power MOS are turned on again after some delay set by the deadtime to prevent cross conduction.

Figure 17 shows the operation of the bridge in the slow decay mode. At the start of the off time, the lower power MOS is switched off and the current recirculates around the upper half of the bridge. Since the voltage across the coil is low, the current decays slowly. After the deadtime the upper power MOS is operated in the synchronous rectification mode. When the monostable times out, the lower power MOS is turned on again after some delay set by the deadtime to prevent cross conduction.

Figure 16. Fast decay mode output stage configurations

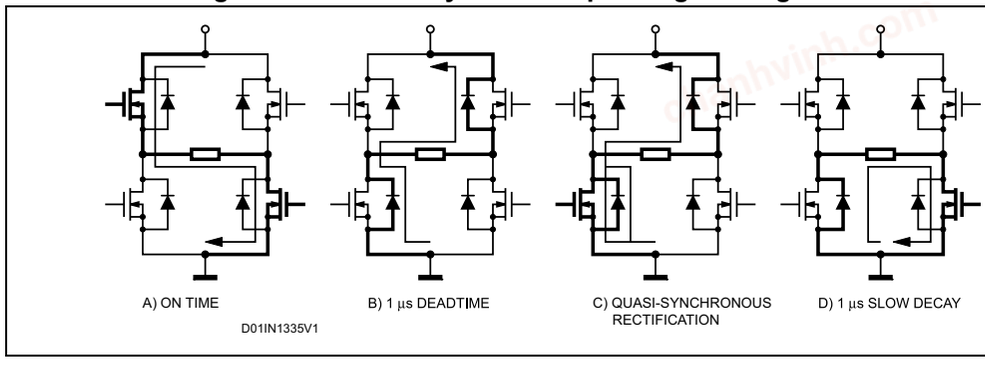

Figure 17. Slow decay mode output stage configurations

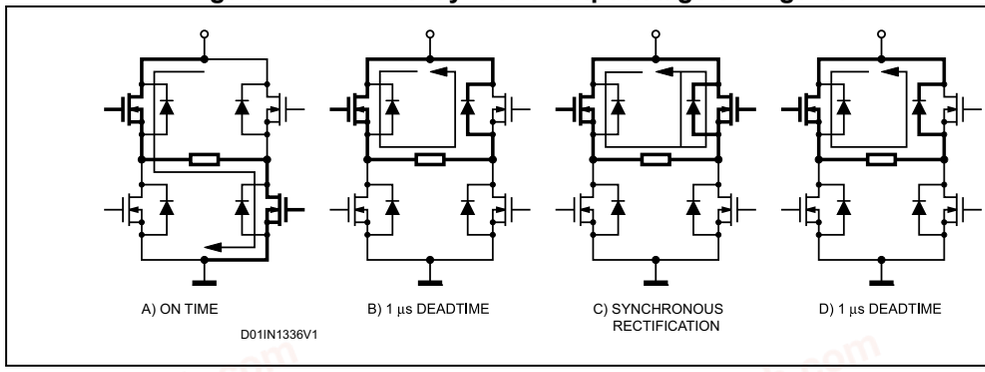

chanhvinh.com

7.1 Stepping sequence generation

The phase sequence generator is a state machine that provides the phase and enable inputs for the two bridges to drive a stepper motor in either full step or half step. Two full step modes are possible, the normal drive mode where both phases are energized each step and the wave drive mode where only one phase is energized at a time. The drive mode is selected by the HALF/FULL input and the current state of the sequence generator as described below. A rising edge of the CLOCK input advances the state machine to the next state. The direction of rotation is set by the CW/CCW input. The RESET input resets the state machine to state.

7.2 Half step mode

A HIGH logic level on the HALF/FULL input selects half step mode. *Figure 18* shows the motor current waveforms and the state diagram for the phase sequencer generator. At startup or after a RESET the phase sequencer is at state 1. After each clock pulse the state changes following the sequence 1, 2, 3, 4, 5, 6, 7, 8, etc. if CW/CCW is high (clockwise movement) or 1, 8, 7, 6, 5, 4, 3, 2, etc. if CW/CCW is low (counterclockwise movement).

7.3 Normal drive mode (full step two phase on)

A LOW level on the HALF/FULL input selects the full step mode. When the low level is applied when the state machine is at an ODD numbered state the normal drive mode is selected. *Figure 19* shows the motor current waveform state diagram for the state machine of the phase sequencer generator. The normal drive mode can easily be selected by holding the HALF/FULL input low and applying a RESET. At startup or after a RESET the state machine is in state 1. While the HALF/FULL input is kept low, state changes following the sequence 1, 3, 5, 7, etc. if CW/CCW is high (clockwise movement) or 1, 7, 5, 3, etc. if CW/CCW is low (counterclockwise movement).

7.4 Wave drive mode (full step one phase on)

A LOW level on the pin HALF/FULL input selects the full step mode. When the low level is applied when the state machine is at an EVEN numbered state the wave drive mode is selected. *Figure 20* shows the motor current waveform and the state diagram for the state machine of the phase sequence generator. To enter the wave drive mode the state machine must be in an EVEN numbered state. The most direct method to select the wave drive mode is to first apply a RESET, then while keeping the HALF/FULL input high apply one pulse to the clock input then take the HALF/FULL input low. This sequence first forces the state machine to state 1. The clock pulse, with the HALF/FULL input high advances the state machine from state 1 to either state 2 or 8 depending on the CW/CCW input. Starting from this point, after each clock pulse (rising edge) will advance the state machine following the sequence 2, 4, 6, 8, etc. if CW/CCW is high (clockwise movement) or 8, 6, 4, 2, etc. if CW/CCW is low (counterclockwise movement).

chanhvinh.com

Figure 18. Half step mode

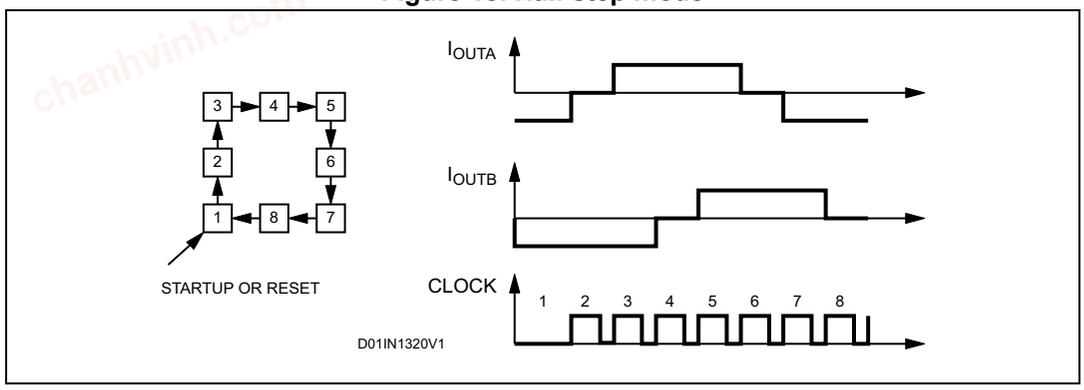

Figure 19. Normal drive mode

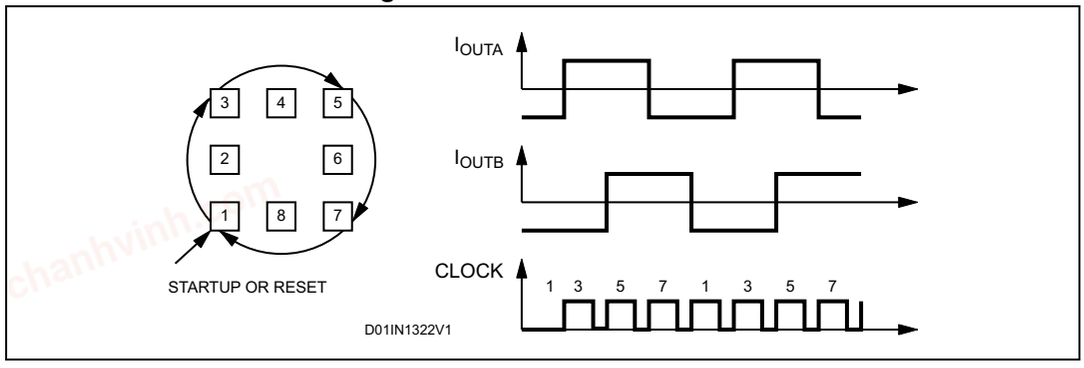

Figure 20. Wave drive mode

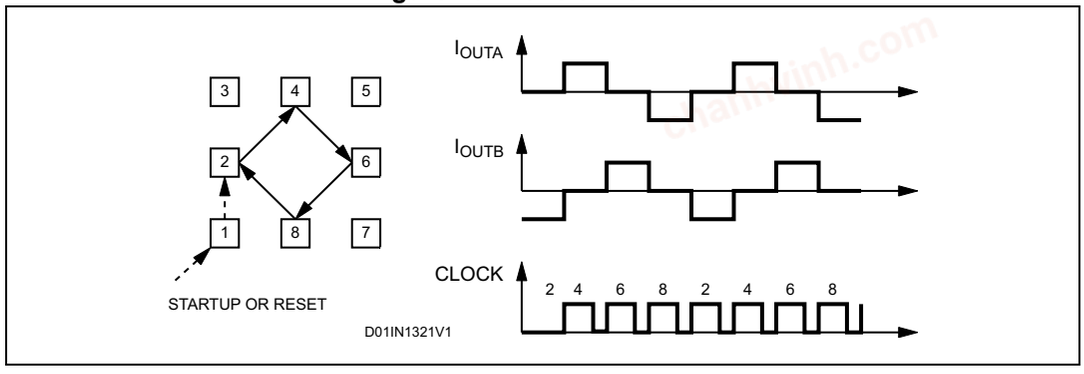

7.5 Non-dissipative overcurrent protection

The L6228 device integrates an “Overcurrent Detection” circuit (OCD) for full protection. This circuit provides protection against a short-circuit to ground or between two phases of the bridge. With this internal overcurrent detection, the external current sense resistor normally used and its associated power dissipation are eliminated. *Figure 21* shows a simplified schematic of the overcurrent detection circuit.

To implement the overcurrent detection, a sensing element that delivers a small but precise fraction of the output current is implemented with each high-side power MOS. Since this current is a small fraction of the output current there is very little additional power dissipation. This current is compared with an internal reference current I_{REF}. When the

chanhvinh.com

output current reaches the detection threshold (typically 2.8 A), the OCD comparator signals a fault condition. When a fault condition is detected, the EN pin is pulled below the turn off threshold (1.3 V typical) by an internal open drain MOS with a pull down capability of 4 mA. By using an external R-C on the EN pin, the off time before recovering normal operation can be easily programmed by means of the accurate thresholds of the logic inputs.

Figure 21. Overcurrent protection simplified schematic

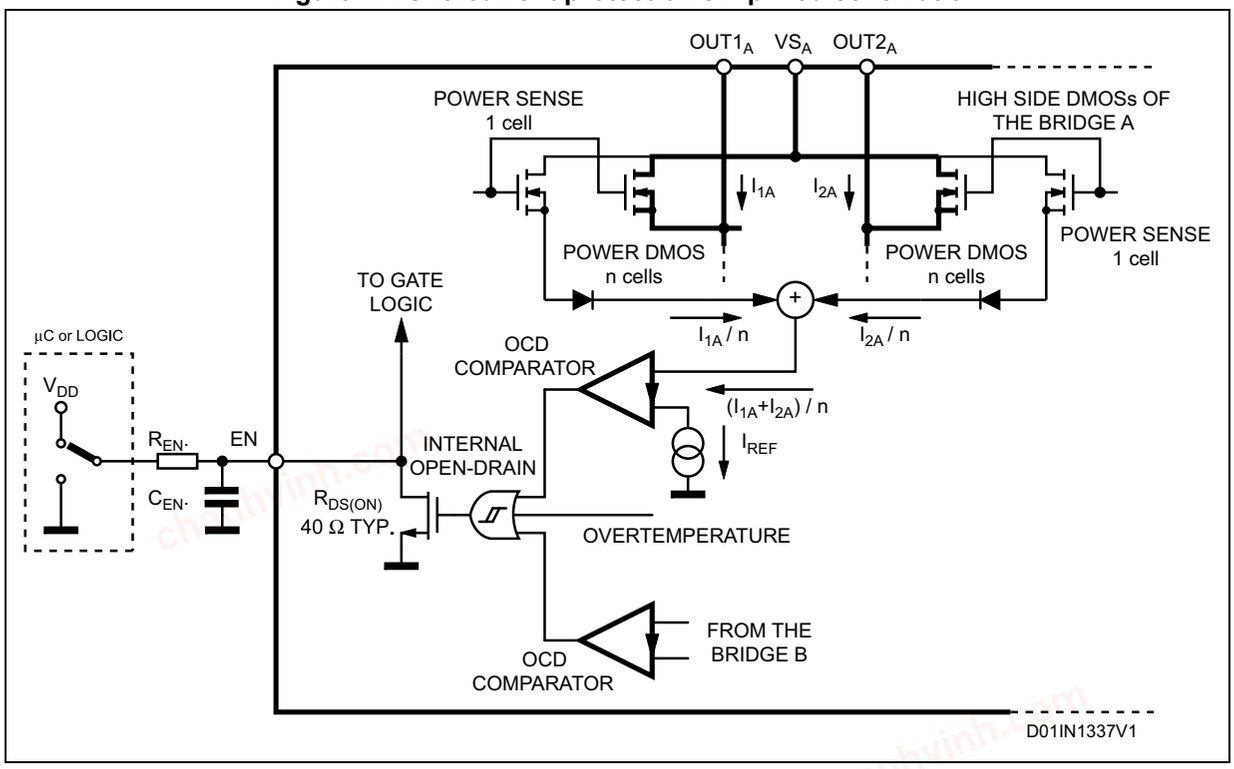

Figure 22 shows the overcurrent detection operation. The disable time $t_{DISABLE}$ before recovering normal operation can be easily programmed by means of the accurate thresholds of the logic inputs. It is affected whether by C_{EN} and R_{EN} values and its magnitude is reported in *Figure 23*. The delay time t_{DELAY} before turning off the bridge when an overcurrent has been detected depends only by C_{EN} value. Its magnitude is reported in *Figure 24*.

C_{EN} is also used for providing immunity to the pin EN against fast transient noises. Therefore the value of C_{EN} should be chosen as big as possible according to the maximum tolerable delay time and the R_{EN} value should be chosen according to the desired disable time.

The resistor R_{EN} should be chosen in the range from 2.2 KΩ to 180 KΩ. Recommended values for R_{EN} and C_{EN} are respectively 100 KΩ and 5.6 nF that allow obtaining 200 µs disable time.

chanhvinh.com

Figure 22. Overcurrent protection waveforms

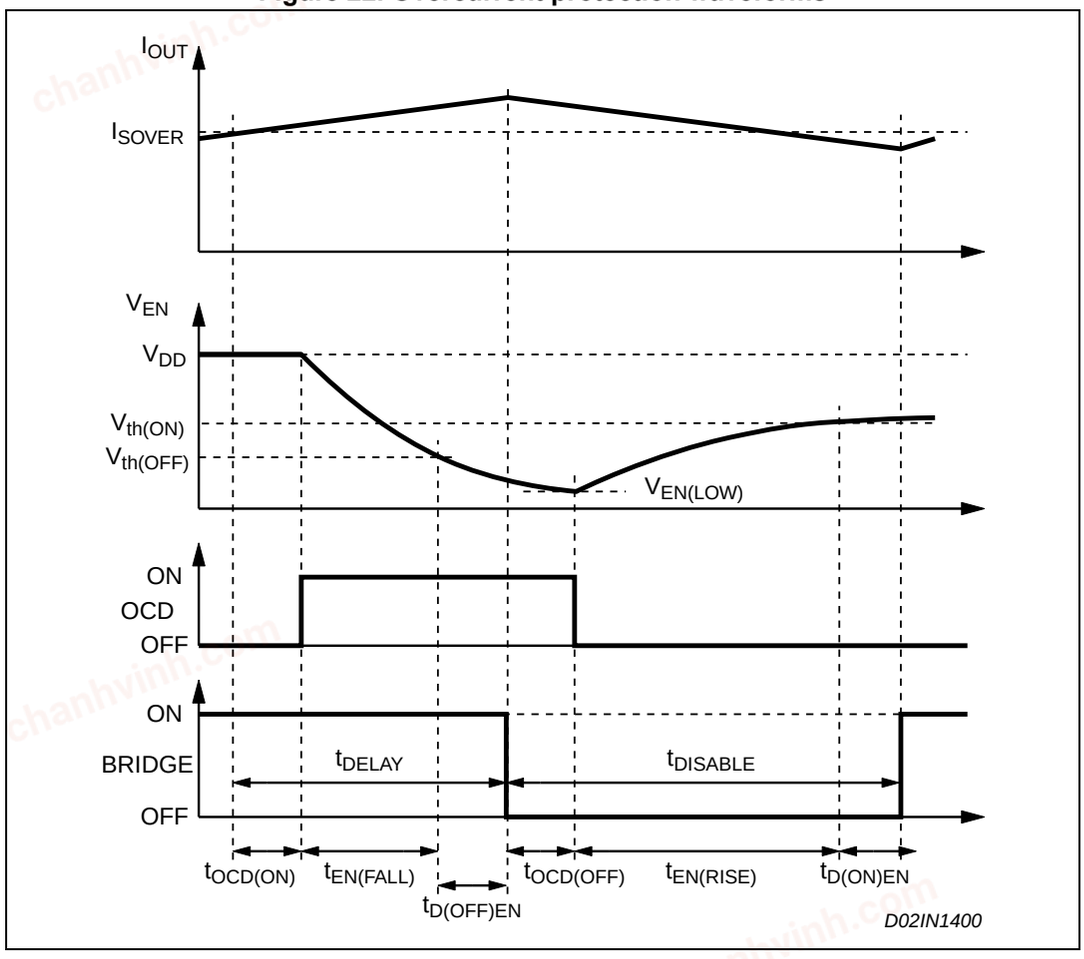

Figure 23. $t_{DISABLE}$ versus C_{EN} and R_{EN} (V_{DD} = 5 V)

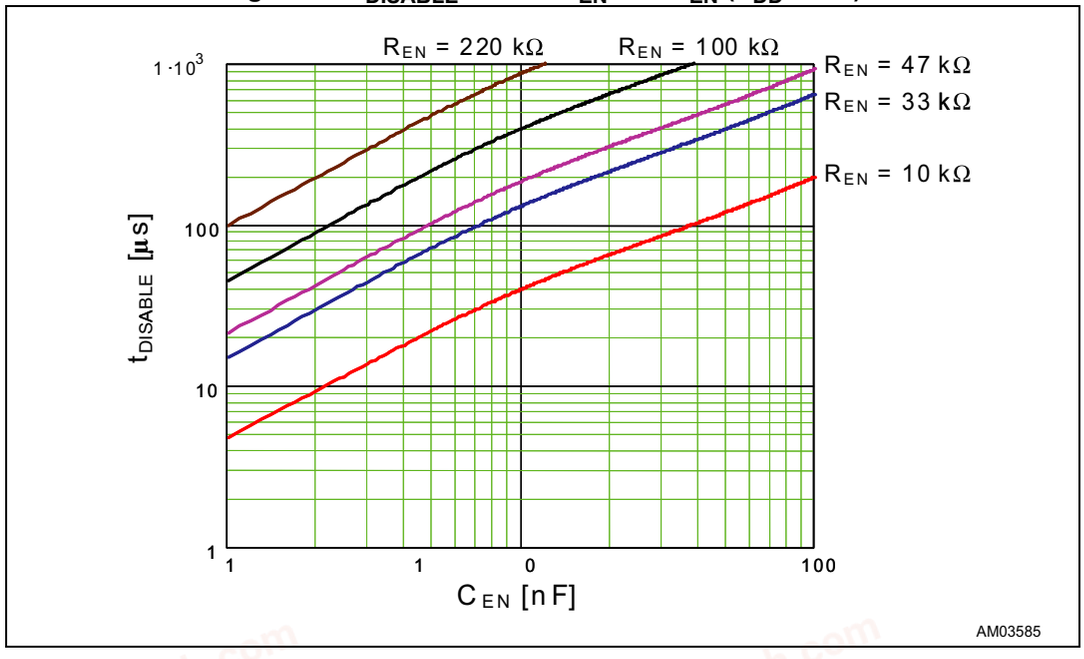

chanhvinh.com

Figure 24. t_{DELAY} versus C_{EN} (V_{DD} = 5 V)

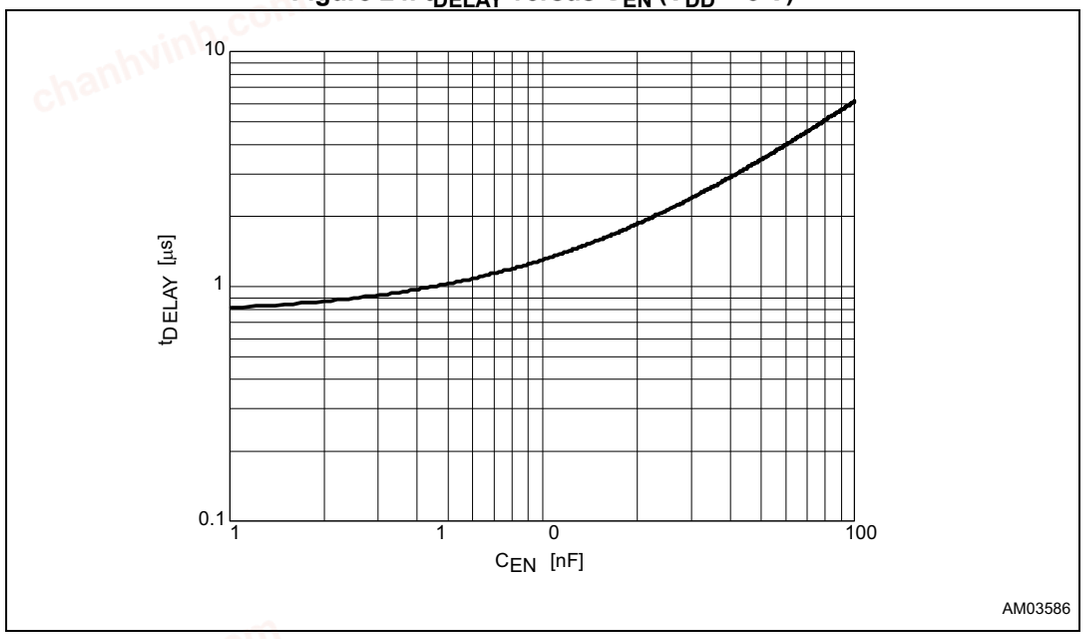

7.6 Thermal protection

In addition to the overcurrent protection, the L6228 integrates a thermal protection for preventing the device destruction in case of junction overtemperature. It works sensing the die temperature by means of a sensible element integrated in the die. The device switches-off when the junction temperature reaches 165 °C (typ. value) with 15 °C hysteresis (typ. value).

chanhvinh.com

8 Application information

A typical bipolar stepper motor driver application using the L6228 device is shown in *Figure 25*. Typical component values for the application are shown in *Table 7*. A high quality ceramic capacitor in the range of 100 to 200 nF should be placed between the power pins (VS_A and VS_B) and ground near the L6228 device to improve the high frequency filtering on the power supply and reduce high frequency transients generated by the switching. The capacitor connected from the EN input to ground sets the shutdown time when an overcurrent is detected (see *Section 7.5: Non-dissipative overcurrent protection on page 21*). The two current sensing inputs ($SENSE_A$ and $SENSE_B$) should be connected to the sensing resistors with a trace length as short as possible in the layout. The sense resistors should be non-inductive resistors to minimize the di/dt transients across the resistor. To increase noise immunity, unused logic pins (except EN) are best connected to 5 V (high logic level) or GND (low logic level) (see *Table 4: Pin description on page 6*). It is recommended to keep power ground and signal ground separated on the PCB.

Table 7. Component values for typical application

Component	Value	Component	Value
C_1	100 µF	D_1	1N4148
C_2	100 nF	D_2	1N4148
C_A	1 nF	R_A	39 KΩ
C_B	1 nF	R_B	39 KΩ
C_{BOOT}	220 nF	R_{EN}	100 KΩ
C_P	10 nF	R_P	100 Ω
C_{EN}	5.6 nF	R_{SENSEA}	0.6 Ω
C_{REF}	68 nF	R_{SENSEB}	0.6 Ω

chanhvinh.com

Figure 25. Typical application

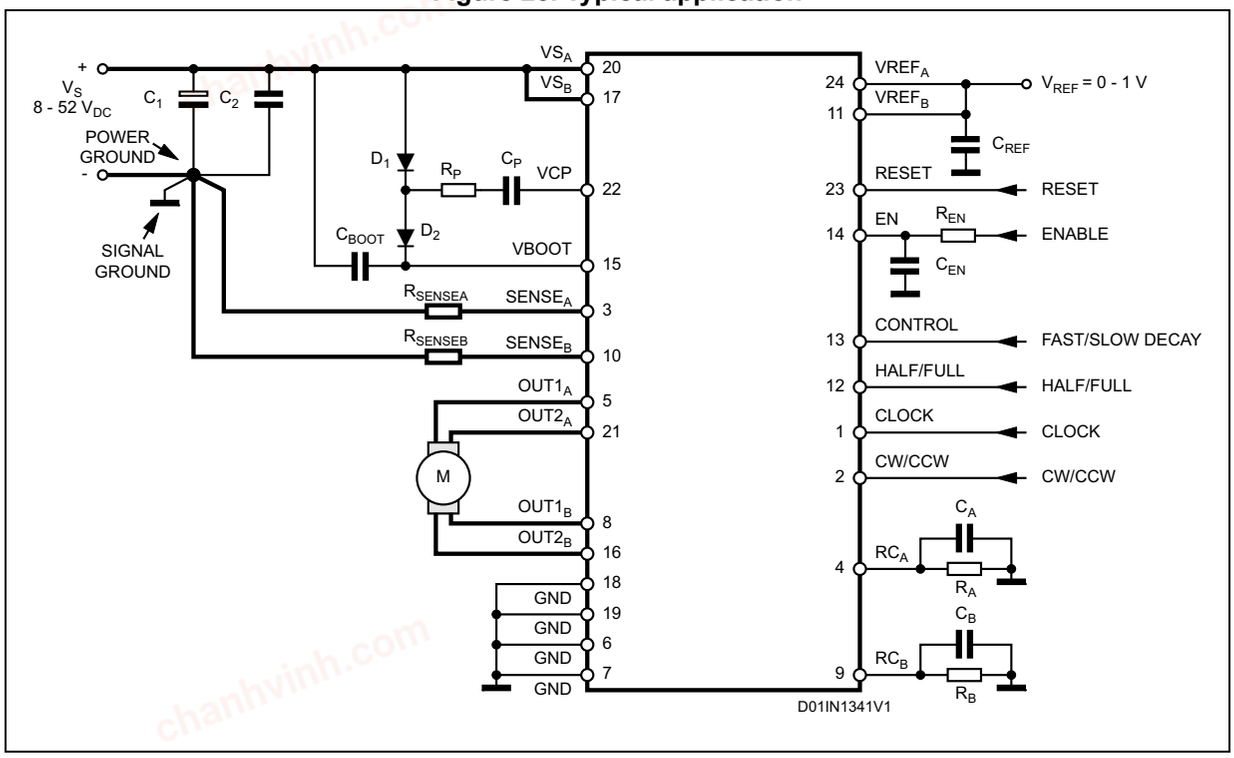

8.1 Output current capability and IC power dissipation

From *Figure 26* to *Figure 29* are shown the approximate relation between the output current and the IC power dissipation using PWM current control driving a two phase stepper motor, for different driving sequences:

- HALF STEP mode (*Figure 26*) in which alternately one phase / two phases are energized.
- NORMAL DRIVE (FULL STEP TWO PHASE ON) mode (*Figure 27*) in which two phases are energized during each step.
- WAVE DRIVE (FULL STEP ONE PHASE ON) mode (*Figure 28*) in which only one phase is energized at each step.
- MICROSTEPPING mode (*Figure 29*), in which the current follows a sine wave profile, provided through the V_{ref} pins.

For a given output current and driving sequence the power dissipated by the IC can be easily evaluated, in order to establish which package should be used and how large must be the on-board copper dissipating area to guarantee a safe operating junction temperature (125 °C maximum).

chanhvinh.com

Figure 26. IC power dissipation versus output current in HALF STEP mode

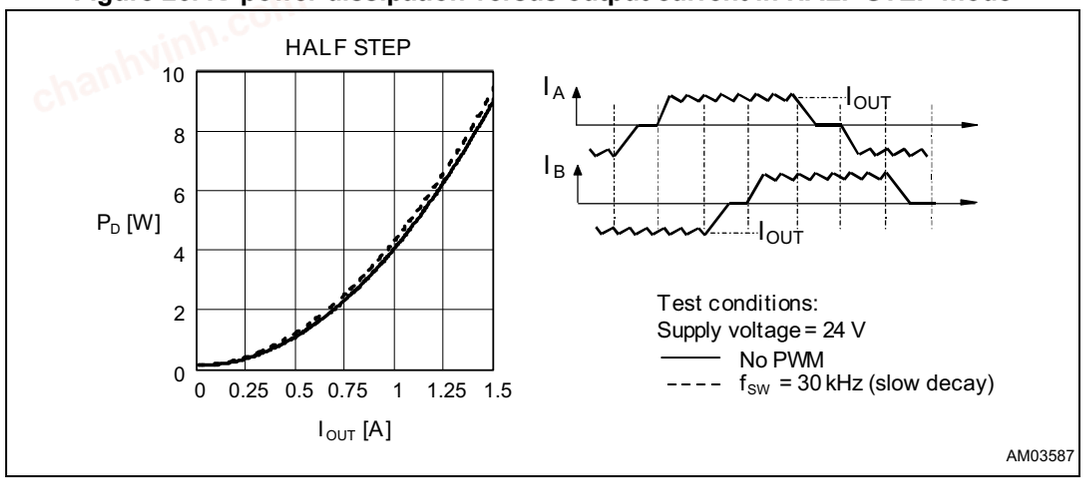

Figure 27. IC power dissipation versus output current in NORMAL mode (full step two phase on)

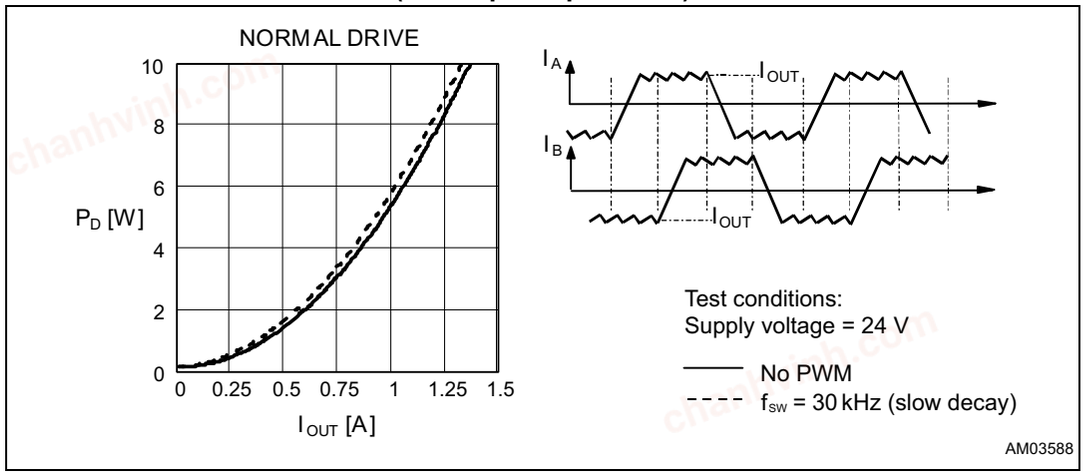

Figure 28. IC power dissipation versus output current in WAVE mode (full step one phase on)

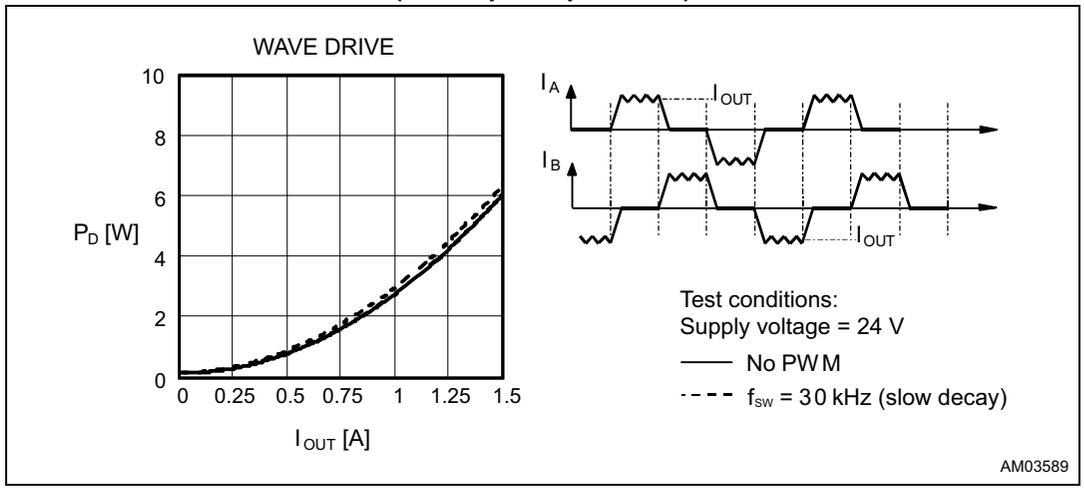

chanhvinh.com

Figure 29. IC power dissipation versus output current in MICROSTEPPING mode

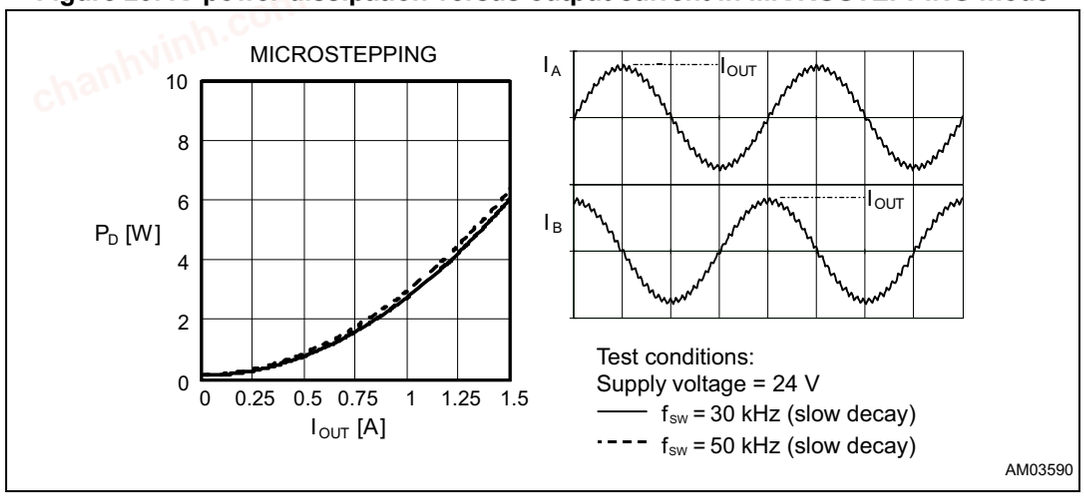

8.2 Thermal management

In most applications the power dissipation in the IC is the main factor that sets the maximum current that can be delivered by the device in a safe operating condition. Therefore, it has to be taken into account very carefully. Besides the available space on the PCB, the right package should be chosen considering the power dissipation. Heat sinking can be achieved using copper on the PCB with proper area and thickness. *Figure 30* and *Figure 31* show the junction to ambient thermal resistance values for the PowerSO36 and SO24 packages.

For instance, using a PowerSO package with a copper slug soldered on a 1.5 mm copper thickness FR4 board with a 6 cm^2 dissipating footprint (copper thickness of 35 µm), the $R_{th(j\text{-}amb)}$ is about 35 °C/W. *Figure 32* shows mounting methods for this package. Using a multi-layer board with vias to a ground plane, thermal impedance can be reduced down to 15 °C/W.

Figure 30. PowerSO36 junction ambient thermal resistance versus on-board copper area

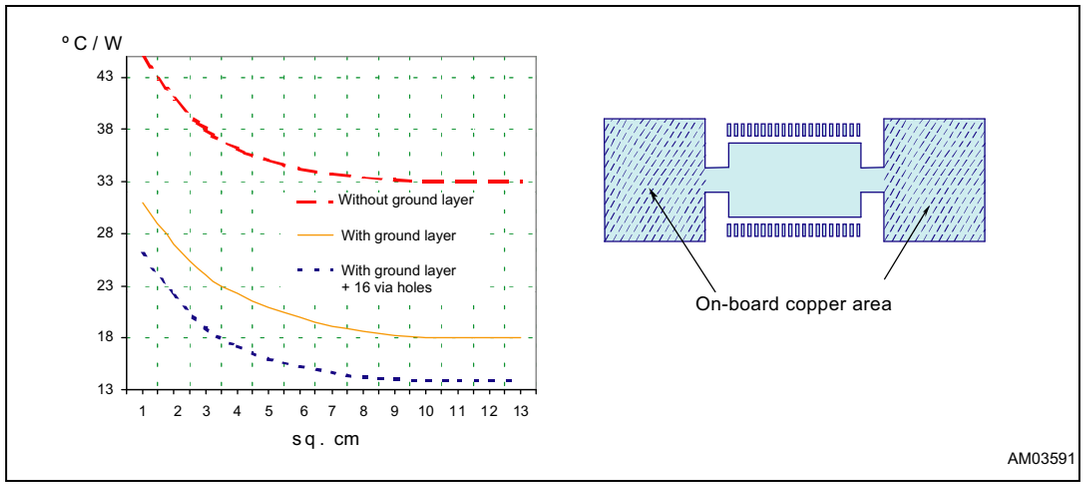

chanhvinh.com

Figure 31. SO24 junction ambient thermal resistance versus on-board copper area

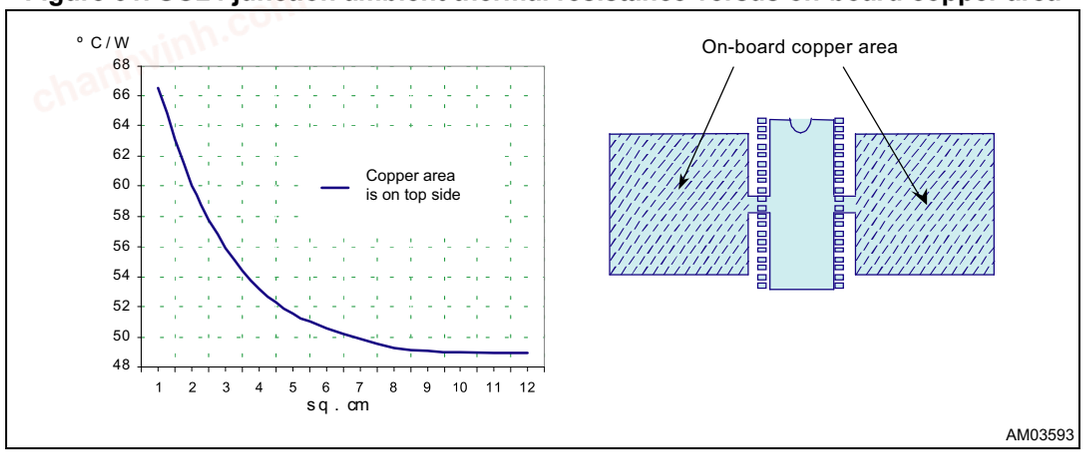

Figure 32. Mounting the PowerSO package

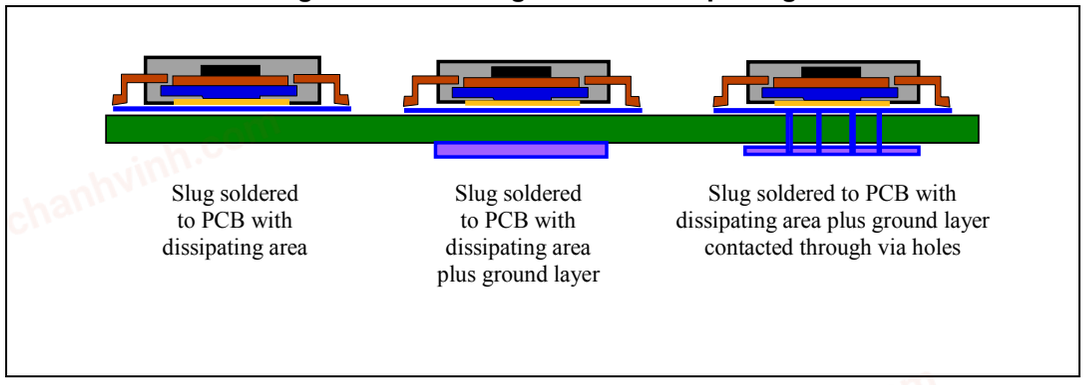

chanhvinh.com

9 Package information

In order to meet environmental requirements, ST offers these devices in different grades of ECOPACK® packages, depending on their level of environmental compliance. ECOPACK specifications, grade definitions and product status are available at: *www.st.com*. ECOPACK is an ST trademark.

9.1 PowerSO36 package information

Figure 33. PowerSO36 package outline

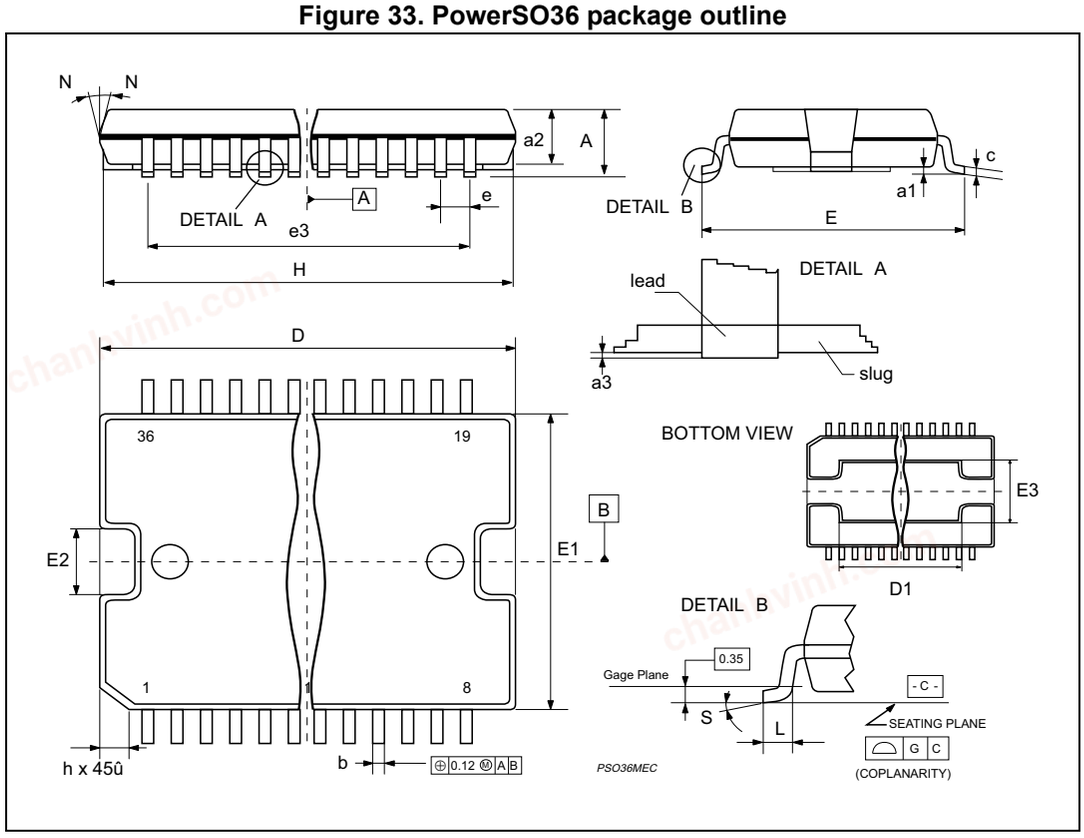

chanhvinh.com

Table 8. PowerSO36 package mechanical data

Symbol	Dimensions					
	mm			inch		
	Min.	Typ.	Max.	Min.	Typ.	Max.
A	-	-	3.60	-	-	0.141
a1	0.10	-	0.30	0.004	-	0.012
a2		-	3.30	-	-	0.130
a3	0	-	0.10	0	-	0.004
b	0.22	-	0.38	0.008	-	0.015
c	0.23	-	0.32	0.009	-	0.012
D(1)	15.80	-	16.00	0.622	-	0.630
D1	9.40	-	9.80	0.370	-	0.385
E	13.90	-	14.50	0.547	-	0.570
e	-	0.65	-	-	0.0256	-
e3	-	11.05	-	-	0.435	-
E1(1)	10.90	-	11.10	0.429	-	0.437
E2	-	-	2.90	-	-	0.114
E3	5.80	-	6.20	0.228	-	0.244
E4	2.90	-	3.20	0.114	-	0.126
G	0	-	0.10	0	-	0.004
H	15.50	-	15.90	0.610	-	0.626
h	-	-	1.10	-	-	0.043
L	0.80	-	1.10	0.031	-	0.043
N	10° (max.)					
S	8° (max.)					

1. “D” and “E1” do not include mold flash or protrusions.
   - Mold flash or protrusions shall not exceed 0.15 mm (0.006 inch).
   - Critical dimensions are “a3”, “E” and “G”.

chanhvinh.com

9.2 SO24 package information

Figure 34. SO24 package outline

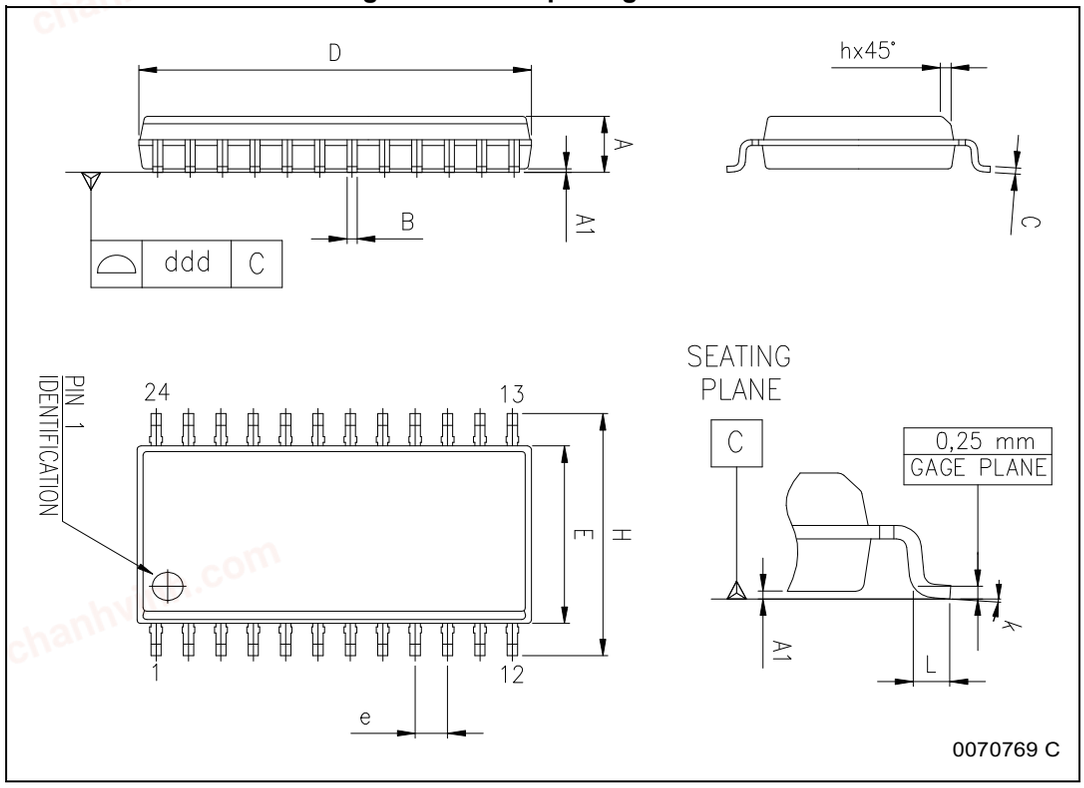

Table 9. SO24 package mechanical data

Symbol	Dimensions (mm)			Dimensions (inch)		
	Min.	Typ.	Max.	Min.	Typ.	Max.
A	2.35	-	2.65	0.093	-	0.104
A1	0.10	-	0.30	0.004	-	0.012
B	0.33	-	0.51	0.013	-	0.020
C	0.23	-	0.32	0.009	-	0.013
D(1)	15.20	-	15.60	0.598	-	0.614
E	7.40	-	7.60	0.291	-	0.299
e	-	1.27	-	-	0.050	-
H	10.0	-	10.65	0.394	-	0.419
h	0.25	-	0.75	0.010	-	0.030
L	0.40	-	1.27	0.016	-	0.050
k	0° (min.), 8° (max.)					
ddd	-	-	0.10	-	-	0.004

1. D" dimension does not include mold flash, protrusions or gate burrs. Mold flash, protrusions or gate burrs shall not exceed 0.15 mm per side.

chanhvinh.com

10 Revision history

Table 10. Document revision history

Date	Revision	Changes
03-Sep-2003	1	Initial release.
18-Feb-2014	2	Updated *Section : Description on page 1* (removed “MultiPower-” from “MultiPower-BCD technology” Added *Contents on page 2*. Updated *Section 1: Block diagram* (added section title, numbered and moved *Figure 1: Block diagram* from page 1 to page 3. Added title to *Section 2: Maximum ratings on page 4*, added numbers and titles from *Table 1: Absolute maximum ratings* to *Table 3: Thermal data*. Added title to *Section 3: Pin connections on page 6*, added number and title to *Figure 2: Pin connections (top view)*, renumbered note *1* below *Figure 2*, added title to *Table 4: Pin description*, renumbered note *1* below *Table 4*. Added title to *Section 4: Electrical characteristics on page 9*, added title and number to *Table 5*, renumbered notes *1* to *7* below *Table 5*. Renumbered *Figure 3* to *Figure 7*. Added numbers to *Section 5: Circuit description on page 13* (including *Section 5.1* and *Section 5.2*). Removed “and uC” from *Section 5.2*. Renumbered *Table 6* , added header to *Table 6*. Renumbered *Figure 8* to *Figure 11*. Added numbers to *Section 6: PWM current control on page 15*. Renumbered *Figure 12* to *Figure 15*. Added titles to *Equation 1: on page 16* till *Equation 4: on page 17*. Added numbers to *Section 7: Decay modes on page 19* (including *Section 7.1* to *Section 7.6*). Renumbered *Figure 16* to *Figure 24*. Added numbers to *Section 8: Application information on page 25* (including *Section 8.1* and *Section 8.2*). Renumbered *Table 7*, added header to *Table 7*. Renumbered *Figure 25* to *Figure 33*. Updated *Section 9: Package information on page 30* (added main title and ECOPACK text. Added titles from *Table 8: PowerSO36 package mechanical data* to *Table 10: SO24 package mechanical data* and from *Figure 34: PowerSO36 package outline* to *Figure 36: SO24 package outline*, reversed order of named tables and figures. Removed 3D figures of packages, replaced 0.200 by 0.020 inch of max. B value in *Table 10*). Added cross-references throughout document. Added *Table 11: Document revision history*. Minor modifications throughout document.
03-Oct-2018	3	Removed PowerDIP24 package from the whole document. Removed “T_j“ from *Table 2 on page 4*. Minor modifications throughout document.

chanhvinh.com

IMPORTANT NOTICE – PLEASE READ CAREFULLY

STMicroelectronics NV and its subsidiaries (“ST”) reserve the right to make changes, corrections, enhancements, modifications, and improvements to ST products and/or to this document at any time without notice. Purchasers should obtain the latest relevant information on ST products before placing orders. ST products are sold pursuant to ST’s terms and conditions of sale in place at the time of order acknowledgement.

Purchasers are solely responsible for the choice, selection, and use of ST products and ST assumes no liability for application assistance or the design of Purchasers’ products.

No license, express or implied, to any intellectual property right is granted by ST herein.

Resale of ST products with provisions different from the information set forth herein shall void any warranty granted by ST for such product.

ST and the ST logo are trademarks of ST. All other product or service names are the property of their respective owners.

Information in this document supersedes and replaces information previously supplied in any prior versions of this document.

© 2018 STMicroelectronics – All rights reserved