chanhvinh.com

HCF40106

Hex Schmitt trigger

Datasheet - production data



SO-14

Features

- Schmitt trigger action with no external components
- Hysteresis voltage typically:
  0.9 V at V_{DD} = 5 V
  2.3 V at V_{DD} =10 V
  3.5 V at V_{DD} =15 V
- Noise immunity greater than 50%
- No limit on input rise and fall times
- Low V_{DD} to V_{SS} current during slow input ramp
- Standardized symmetrical output characteristics
- Quiescent current specified up to 20 V
- 5 V, 10 V, and 15 V parametric ratings
- Input leakage current I_I = 100 nA (max.) at V_{DD} = 18 V and T_A = 25 °C
- 100% tested for quiescent current
- ESD performance
  - HBM: 2 kV
  - MM: 200 V
  - CDM: 1 kV

Applications

- Automotive
- Industrial
- Computer
- Consumer

Description

The HCF40106 is a monolithic integrated circuit fabricated in metal oxide semiconductor technology available in an SO-14 package.

The HCF40106 consists of six Schmitt trigger circuits. Each circuit functions as an inverter with Schmitt trigger action on the input. The trigger switches at different points for positive and negative-going signals. The difference between the positive voltage (V_P) and the negative voltage (V_N) is defined as hysteresis voltage (V_H).

Table 1. Device summary table

Order code	Temperature range	Package	Packing	Marking
HCF40106M013TR	-55 ° C to +125 ° C	SO-14	Tape & reel	HCF40106
HCF40106YM013TR(1)	-40 ° C to +125 ° C	SO-14 (automotive grade)(1)		HCF40106Y

1. Qualification and characterization according to AEC Q100 and Q003 or equivalent, advanced screening according to AEC Q001 and Q002 or equivalent.

This is information on a product in full production. www.st.com

chanhvinh.com

Contents

1 Pin information 3

2 Functional description 4

3 Electrical characteristics 6

4 Typical applications 10

5 Package information 12

6 Ordering information 15

7 Revision history 15

chanhvinh.com

1 Pin information

Figure 1. Pin connections (top view)

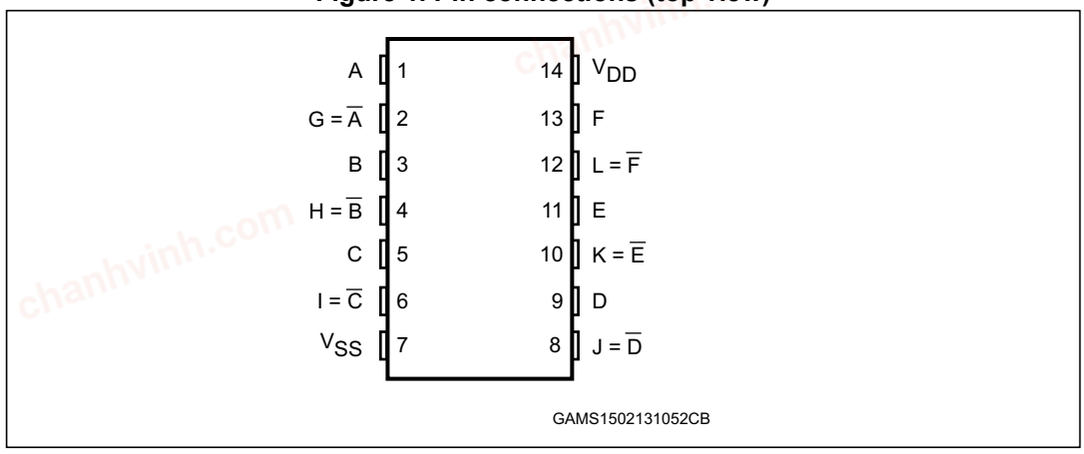

Table 2. Pin description

Pin no	Symbol	Name and function
1, 3, 5, 9, 11, 13	A, B, C, D, E, F	Data inputs
2, 4, 6, 8, 10, 12	G, H, I, J, K, L	Data outputs
7	V_{SS}	Negative supply voltage
14	V_{DD}	Positive supply voltage

chanhvinh.com

2 Functional description

Figure 2. Logic diagram

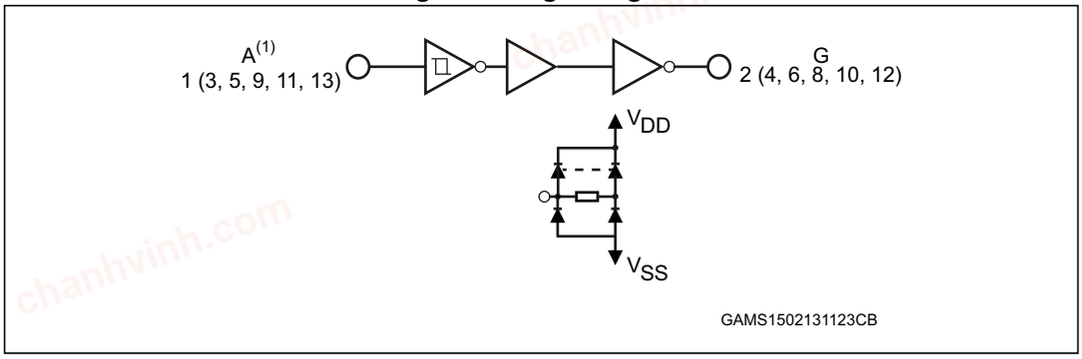

1. All inputs protected by COS/MOS protection network.

Table 3. Truth table

Inputs (A to F)	Outputs (G to L)
L	H
H	L

Figure 3. Functional diagram

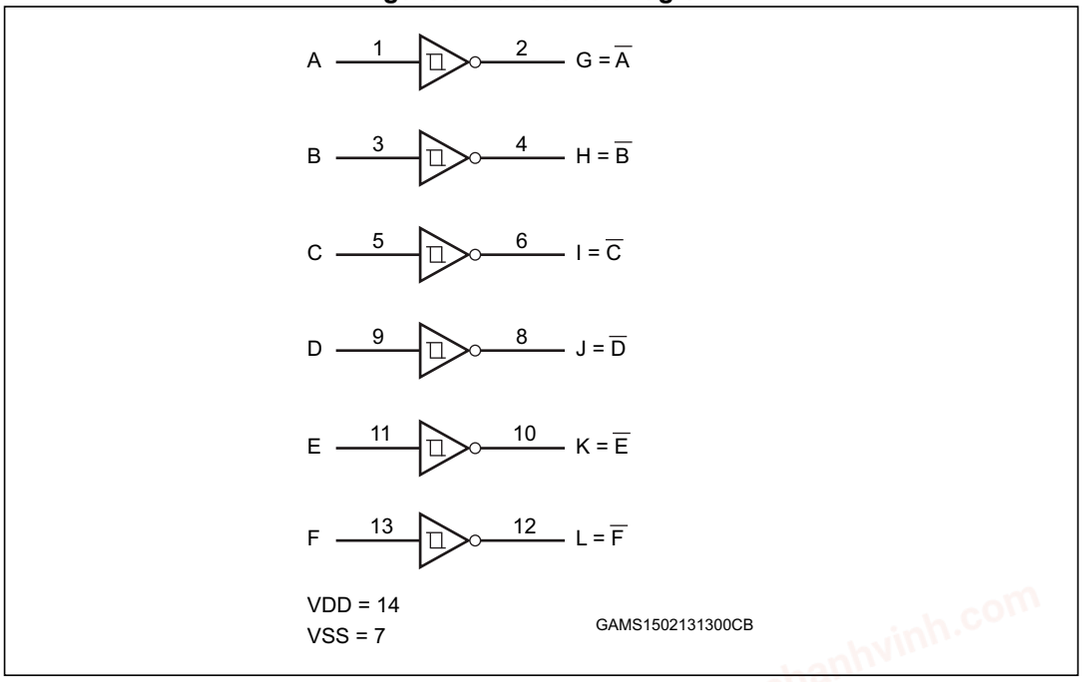

chanhvinh.com

Figure 4. Input equivalent circuit

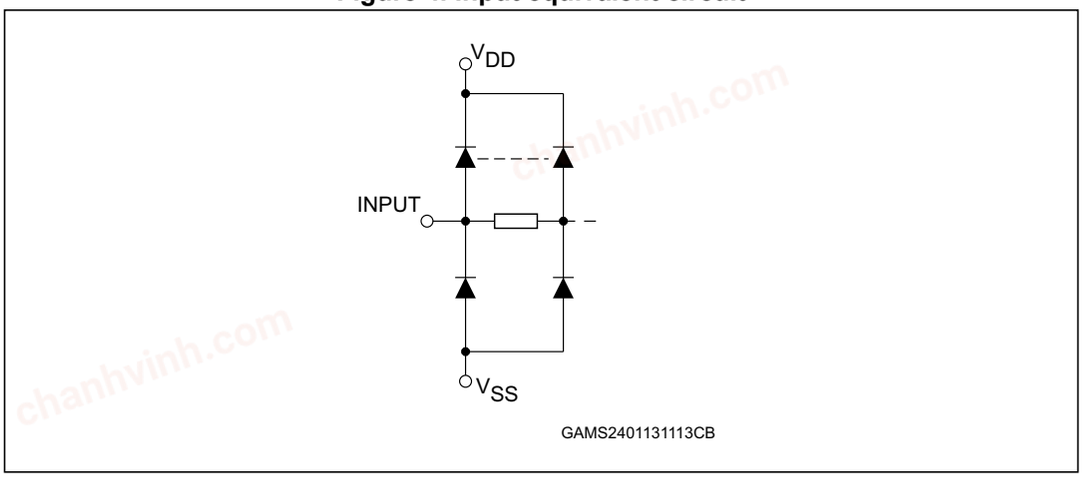

chanhvinh.com

3 Electrical characteristics

Absolute maximum ratings are those values beyond which damage to the device may occur. Functional operation under these conditions is not implied. All voltage values are referred to V_{SS} pin voltage.

Table 4. Absolute maximum ratings (AMR)

Symbol	Parameter	Value	Unit
V_{DD}	Supply voltage	-0.5 to +22	V
V_I	DC input voltage	-0.5 to V_{DD} + 0.5	
I_I	DC input current	±10	mA
P_D	Power dissipation per package	200	mW
	Power dissipation per output transistor	100	
T_{op}	Operating temperature	-55 to +125	°C
T_{stg}	Storage temperature	-65 to +150	

Table 5. Recommended operating conditions

Symbol	Parameter	Value	Unit
V_{DD}	Supply voltage	3 to 20	V
V_I	Input voltage	0 to V_{DD}	
T_{op}	Operating temperature	-55 to 125	°C

chanhvinh.com

Table 6. DC specifications(1)

Sym.	Parameter	Test condition				Value							Unit
		V_I (V)	V_O (V)	$\|I_O\|$ (µA)	V_{DD}(V)	T_A = 25 °C			-40 to 85 °C		-55 to 125 °C		
						Min.	Typ.	Max.	Min.	Max.	Min.	Max.	
I_L	Quiescent current	0/5			5			1		30		30	µA
		0/10			10		0.02	2		60		60	
		0/15			15			4		120		120	
		0/20			20		0.04	20		600		600	
V_{OH}	High level output voltage	0/5		<1	5	4.95			4.95		4.95		V
		0/10			10	9.95			9.95		9.95		
		0/15			15	14.95			14.95		14.95		
V_{OL}	Low level output voltage	5/0		<1	5								
		10/0			10		0.05			0.05		0.05	
		15/0			15								
V_P	Positive trigger threshold voltage				5	2.2	2.9	3.6	2.2	3.6	2.2	3.6	
					10	4.6	5.9	7.1	4.6	7.1	4.6	7.1	
					15	6.8	8.8	10.8	6.8	10.8	6.8	10.8	
V_N	Negative trigger threshold voltage				5	0.9	1.9	2.8	0.9	2.8	0.9	2.8	
					10	2.5	3.9	5.2	2.5	5.2	2.5	5.2	
					15	4	5.8	7.4	4	7.4	4	7.4	
V_H	Hysteresis voltage				5	0.3	0.9	1.6	0.3	1.6	0.3	1.6	
					10	1.2	2.3	3.4	1.2	3.4	1.2	3.4	
					15	1.6	3.5	5	1.6	5	1.6	5	
I_{OH}	Output drive current	0/5	2.5		5	-1.36	-3.2		-1.15		-1.1		mA
			4.6			-0.44	-1		-0.36		-0.36		
		0/10	9.5		10	-1.1	-2.6		-0.9		-0.9		
		0/15	13.5		15	-3.0	-6.8		-2.4		-2.4		
I_{OL}	Output sink current	0/5	0.4		5	0.44	1		0.36		0.36		mA
		0/10	0.5		10	1.1	2.6		0.9		0.9		
		0/15	1.5		15	3.0	6.8		2.4		2.4		
I_I	Input leakage current	0/18	Any input		18		$\pm 10^{-5}$	±0.1		±1		±1	µA
C_I	Input capacitance		Any input				5	7.5					pF

1. The noise margin for both level "1" and "0" is: 1 V min. with V_{DD} = 5 V, 2 V min. with V_{DD} = 10 V, and 2.5 V min. with V_{DD} = 15 V.

chanhvinh.com

Table 7. Dynamic electrical characteristics
(T_{amb} = 25 °C, C_L = 50 pF, R_L = 200 kΩ, $t_r = t_f$ = 20 ns)

Symbol	Parameter	Test condition	Value(1)		Unit
		V_{DD} (V)	Typ.	Max.	
t_{PLH}, t_{PHL}	Propagation delay time	5	140	280	ns
		10	70	140	
		15	60	120	
t_{TLH}, t_{THL}	Output transition time	5	100	200	
		10	50	100	
		15	40	80	

1. The typical temperature coefficient for all V_{DD} values is 0.3 %/°C.

Figure 5. Test circuit

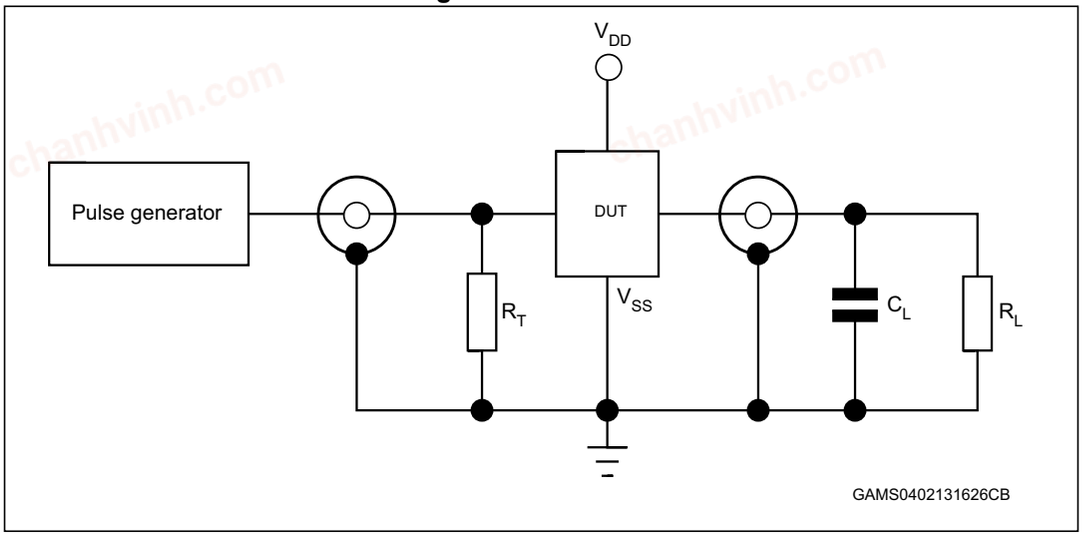

1. Legend: C_L = 50 pF or equivalent (includes jig and probe capacitance), R_L = 200 KΩ, $R_T = Z_{OUT}$ of pulse generator (typically 50 Ω)

chanhvinh.com

Figure 6. Propagation delay time waveform (f = 1 MHz; 50 % duty cycle)

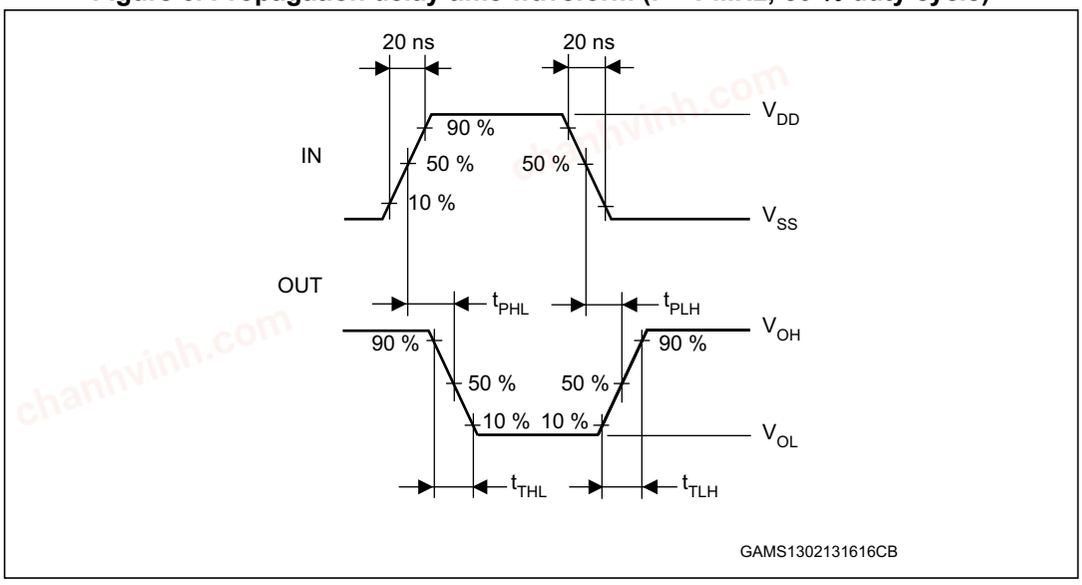

chanhvinh.com

4 Typical applications

Figure 7. Astable multivibrator

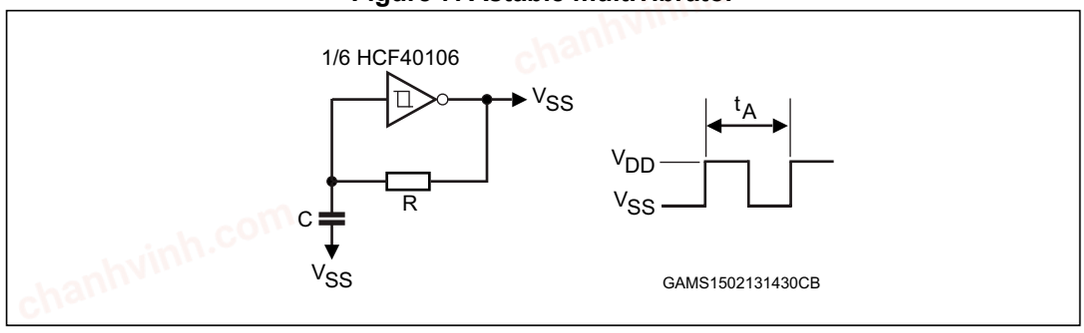

$$t_A = RC\ln\left[\left(\frac{V_P}{V_N}\right)\left(\frac{V_{DD}-V_N}{V_{DD}-V_P}\right)\right]$$

50 kΩ ≤ R ≤ 1 mΩ

100 pF ≤ C ≤ 1 µF

For the range of R and C given 2 µs < t_A < 0.4 s

Figure 8. Monostable multivibrator

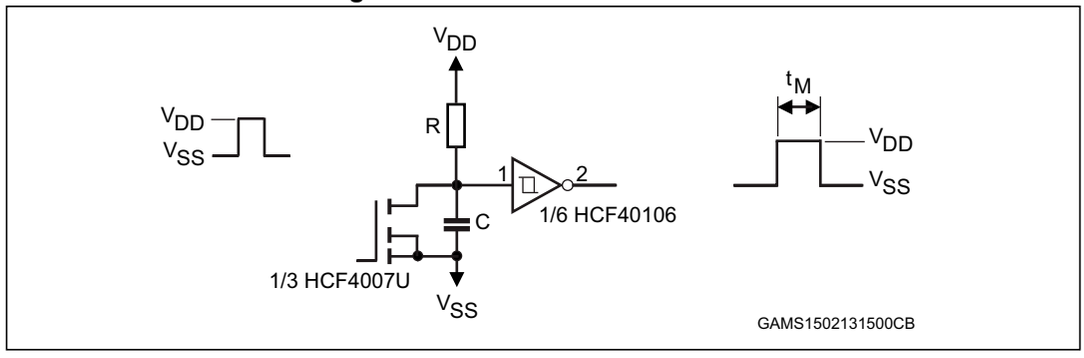

$$t_M = RC\ln\left(\frac{V_{DD}}{V_{DD}-V_P}\right)$$

50 kΩ ≤ R ≤ 1 mΩ

100 pF ≤ C ≤ 1 µF

For the range of R and C given 5 µs < t_M < 1s

chanhvinh.com

Figure 9. Wave sharper

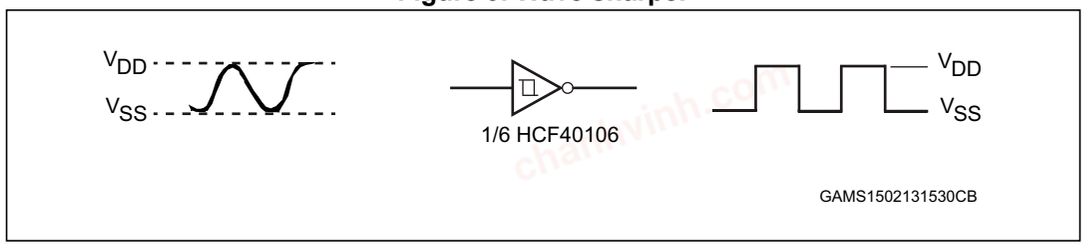

The frequency range of the wave shape is from DC to 1 MHz.

chanhvinh.com

5 Package information

In order to meet environmental requirements, ST offers these devices in different grades of ECOPACK® packages, depending on their level of environmental compliance. ECOPACK® specifications, grade definitions and product status are available at: *www.st.com*. ECOPACK® is an ST trademark.

chanhvinh.com

Figure 10. SO-14 package mechanical drawing

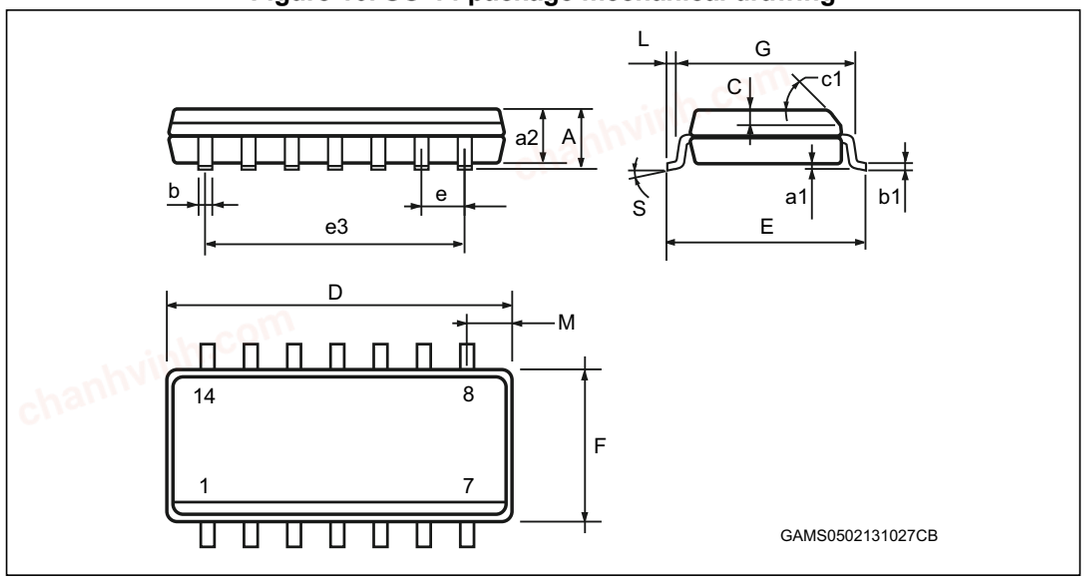

Table 8. SO-14 package mechanical data

Ref	Dimensions					
	Millimeters			Inches		
	Min.	Typ.	Max.	Min.	Typ.	Max.
A			1.75			0.068
a1	0.1		0.2	0.003		0.007
a2			1.65			0.064
b	0.35		0.46	0.013		0.018
b1	0.19		0.25	0.007		0.010
C		0.5			0.019	
c1		45 °			45 °	
D	8.55		8.75	0.336		0.344
E	5.8		6.2	0.228		0.244
e		1.27			0.050	
e3		7.62			0.300	
F	3.8		4.0	0.149		0.157
G	4.6		5.3	0.181		0.208
L	0.5		1.27	0.019		0.050
M			0.68			0.026
S			8 °			8 °

chanhvinh.com

Figure 11. SO-14 tape and reel information

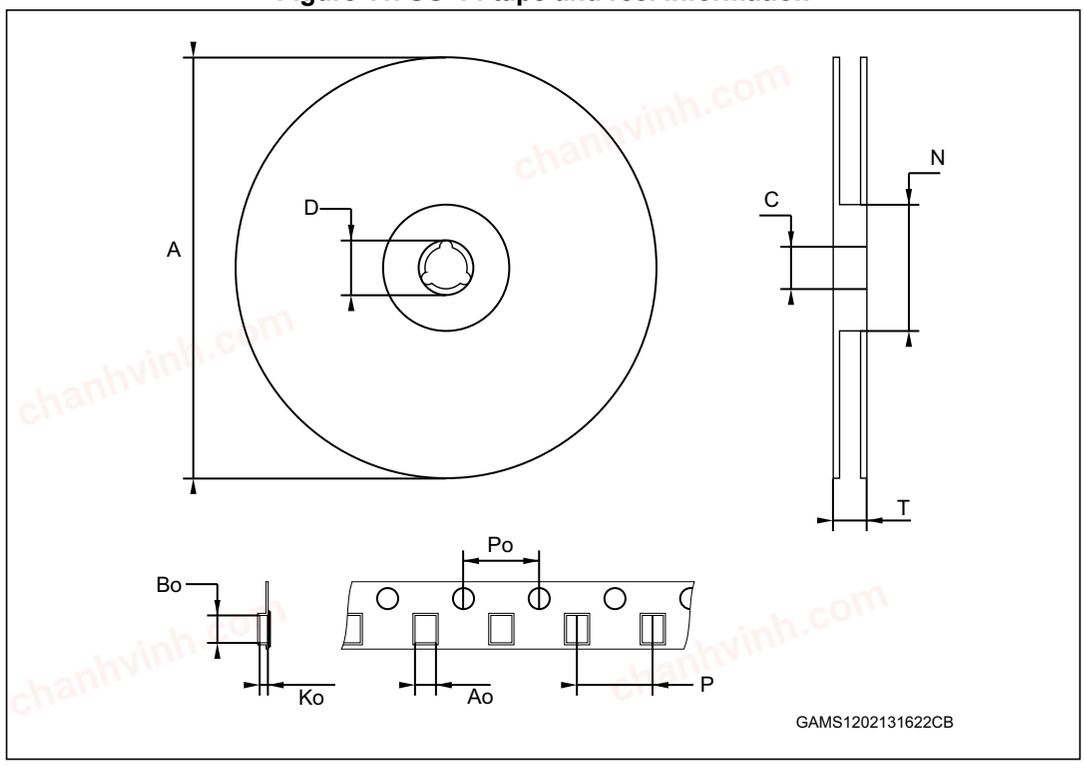

1. Drawing is not to scale.

Table 9. SO-14 tape and reel information

Ref	Dimensions					
	Millimeters			Inches		
	Min.	Typ.	Max.	Min.	Typ.	Max.
A			330			12.992
C	12.8		13.2	0.504		0.519
D	20.2			0.795		
N	60			2.362		
T			22.4			0.882
Ao	6.4		6.6	0.252		0.260
Bo	9		9.2	0.354		0.362
Ko	2.1		2.3	0.082		0.090
Po	3.9		4.1	0.153		0.161
P	7.9		8.1	0.311		0.319

chanhvinh.com

6 Ordering information

Table 10. Order codes

Order code	Temperature range	Package	Packing	Marking
HCF40106M013TR	-55 ° C to +125 ° C	SO-14	Tape & reel	HCF40106
HCF40106YM013TR(1)	-40 ° C to +125 ° C	SO-14 (automotive grade)(1)		HCF40106Y

1. Qualification and characterization according to AEC Q100 and Q003 or equivalent, advanced screening according to AEC Q001 and Q002 or equivalent.

7 Revision history

Table 11. Document revision history

Date	Revision	Changes
19-Feb-2013	3	Document template and layout updated Updated package names (PDIP-14 and SO-14 instead of DIP-14 and SOP-14) Updated *Features* Added *Applications* Updated *Device summary table* Removed “HCC” from *Figure 7*, *Figure 8*, and *Figure 9* Added *Section 6: Ordering information*
06-Jan-2014	4	Removed DIP package option Added ESD performance to *Features* Updated footnote *1* of *Table 1: Device summary table* Updated footnote *1* of *Table 10: Order codes*

chanhvinh.com

Please Read Carefully:

Information in this document is provided solely in connection with ST products. STMicroelectronics NV and its subsidiaries (“ST”) reserve the right to make changes, corrections, modifications or improvements, to this document, and the products and services described herein at any time, without notice.

All ST products are sold pursuant to ST’s terms and conditions of sale.

Purchasers are solely responsible for the choice, selection and use of the ST products and services described herein, and ST assumes no liability whatsoever relating to the choice, selection or use of the ST products and services described herein.

No license, express or implied, by estoppel or otherwise, to any intellectual property rights is granted under this document. If any part of this document refers to any third party products or services it shall not be deemed a license grant by ST for the use of such third party products or services, or any intellectual property contained therein or considered as a warranty covering the use in any manner whatsoever of such third party products or services or any intellectual property contained therein.

UNLESS OTHERWISE SET FORTH IN ST’S TERMS AND CONDITIONS OF SALE ST DISCLAIMS ANY EXPRESS OR IMPLIED WARRANTY WITH RESPECT TO THE USE AND/OR SALE OF ST PRODUCTS INCLUDING WITHOUT LIMITATION IMPLIED WARRANTIES OF MERCHANTABILITY, FITNESS FOR A PARTICULAR PURPOSE (AND THEIR EQUIVALENTS UNDER THE LAWS OF ANY JURISDICTION), OR INFRINGEMENT OF ANY PATENT, COPYRIGHT OR OTHER INTELLECTUAL PROPERTY RIGHT.

ST PRODUCTS ARE NOT DESIGNED OR AUTHORIZED FOR USE IN: (A) SAFETY CRITICAL APPLICATIONS SUCH AS LIFE SUPPORTING, ACTIVE IMPLANTED DEVICES OR SYSTEMS WITH PRODUCT FUNCTIONAL SAFETY REQUIREMENTS; (B) AERONAUTIC APPLICATIONS; (C) AUTOMOTIVE APPLICATIONS OR ENVIRONMENTS, AND/OR (D) AEROSPACE APPLICATIONS OR ENVIRONMENTS. WHERE ST PRODUCTS ARE NOT DESIGNED FOR SUCH USE, THE PURCHASER SHALL USE PRODUCTS AT PURCHASER’S SOLE RISK, EVEN IF ST HAS BEEN INFORMED IN WRITING OF SUCH USAGE, UNLESS A PRODUCT IS EXPRESSLY DESIGNATED BY ST AS BEING INTENDED FOR “AUTOMOTIVE, AUTOMOTIVE SAFETY OR MEDICAL” INDUSTRY DOMAINS ACCORDING TO ST PRODUCT DESIGN SPECIFICATIONS. PRODUCTS FORMALLY ESCC, QML OR JAN QUALIFIED ARE DEEMED SUITABLE FOR USE IN AEROSPACE BY THE CORRESPONDING GOVERNMENTAL AGENCY.

Resale of ST products with provisions different from the statements and/or technical features set forth in this document shall immediately void any warranty granted by ST for the ST product or service described herein and shall not create or extend in any manner whatsoever, any liability of ST.

ST and the ST logo are trademarks or registered trademarks of ST in various countries.
Information in this document supersedes and replaces all information previously supplied.
The ST logo is a registered trademark of STMicroelectronics. All other names are the property of their respective owners.

© 2014 STMicroelectronics - All rights reserved

STMicroelectronics group of companies

Australia - Belgium - Brazil - Canada - China - Czech Republic - Finland - France - Germany - Hong Kong - India - Israel - Italy - Japan - Malaysia - Malta - Morocco - Philippines - Singapore - Spain - Sweden - Switzerland - United Kingdom - United States of America

www.st.com