chanhvinh.com

life.augmented

FDA903S

Data brief

1x10 W digital input class-D automotive audio amplifier with advanced diagnostics, wide voltage operating range for telematics and e-Call application

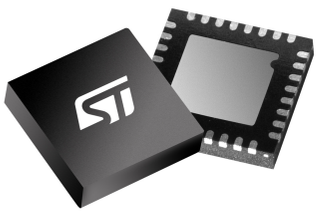

QFN32 (exposed pad down)

Product status link
FDA903S

Product summary		
Order code	Package	Packing
FDA903S-6DY	QFN32 (exp. pad down)	Tray
FDA903S-6DT		Tape and reel

Features

- AEC-Q100 qualified
- Integrated 100 dB D/A conversion
- I^2S and TDM digital input (up to 16CH TDM)
- Selectable input sample rate frequency (8/16/32/44.1/48/96 kHz)
- Wide supply operating range: 3.3 V - 18 V
- PWM frequency switching selectable by I^2C
  - 352.8 kHz, 384kHz, 411.6 kHz, 448 kHz
- 2 I^2C addresses
- MOSFET power outputs
  - Typ 10 W 4 Ω at 14.4 V, 1 kHz THD = 1%
  - Typ 5 W 8 Ω at 14.4 V, 1 kHz THD = 1%
- Noise: 38 µV A-weighted: 20 kHz
- 8 Ω, 4 Ω driving capability
- Input amplitude limiter (configurable through I^2C)
- I^2C full configurability and diagnostic
  - Startup diagnostic
  - Input voltage amplitude limiter function (configurable through I^2C)
  - 4 x Thermal warning
  - DC diagnostic
  - OCP protection scheme configurable
  - Mute time configuration
  - DAM (Digital-Admittance-Meter)
- Capability to run complete diagnostic in play
  - Configurable Clipping Detector
  - One of the Thermal Warnings
  - Over Current Protection
  - Open Load detection
  - High voltage mute
- Load current monitor
- 2 CD/Diag pin
- Integrated ESD and short circuit protection
- QFN32 wettable flanks
- Tested according to CISPR 25 - Class V (Fourth edition)

Description

The FDA903S is the new ST single channel class-D audio amplifier, specifically designed for automotive applications. The FDA903S integrates a 24-bit, 100 dB DAC conversion and PWM class-D output stage with feedback before LC filter. This configuration enables the design of a compact and inexpensive application.

chanhvinh.com

The FDA903S supports I^2S and TDM digital bit stream up to 16CH with several sampling frequencies from 8 kHz up to 96 kHz. FDA903S embeds a complete diagnostic in play, including real-time load-current monitoring and digital admittance meter, to support the most demanding OEM requirements in terms of speaker control and system robustness/ reliability.

The FDA903S supports start stop cranking down to 3.3 V and it is available in a very compact and thin QFN 5x5 package. Thus the FDA903S is suitable for any level of automotive application especially e-Call and Telematics.

chanhvinh.com

1 Block diagram and pins description

Figure 1. **Block diagram**

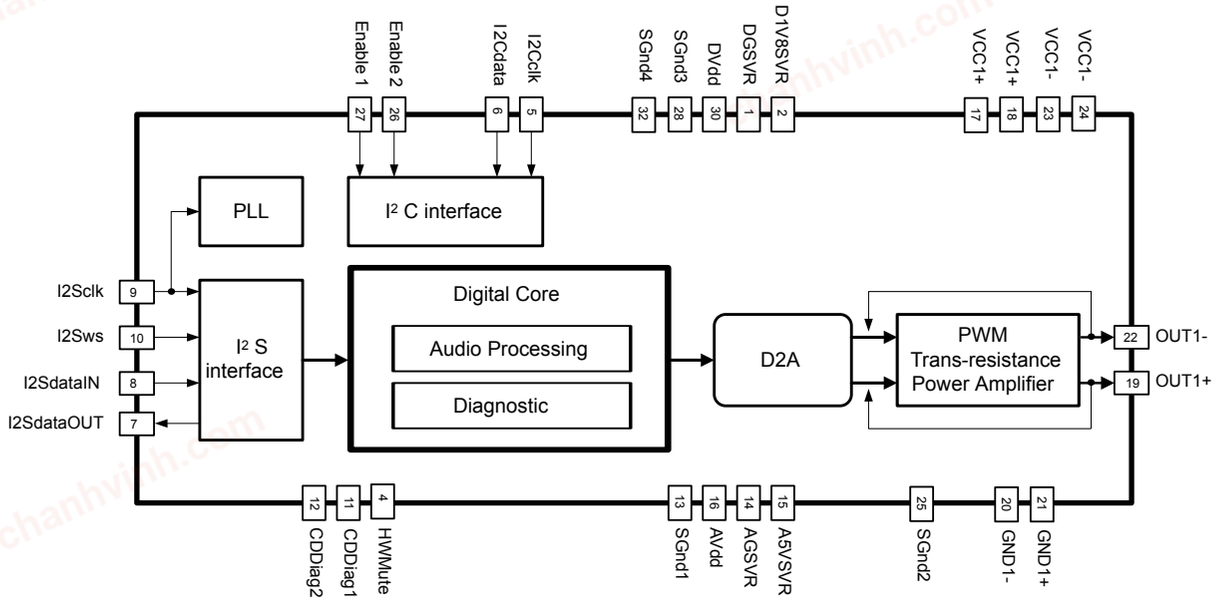

chanhvinh.com

Figure 2. **Pin connection diagram (bottom view)**

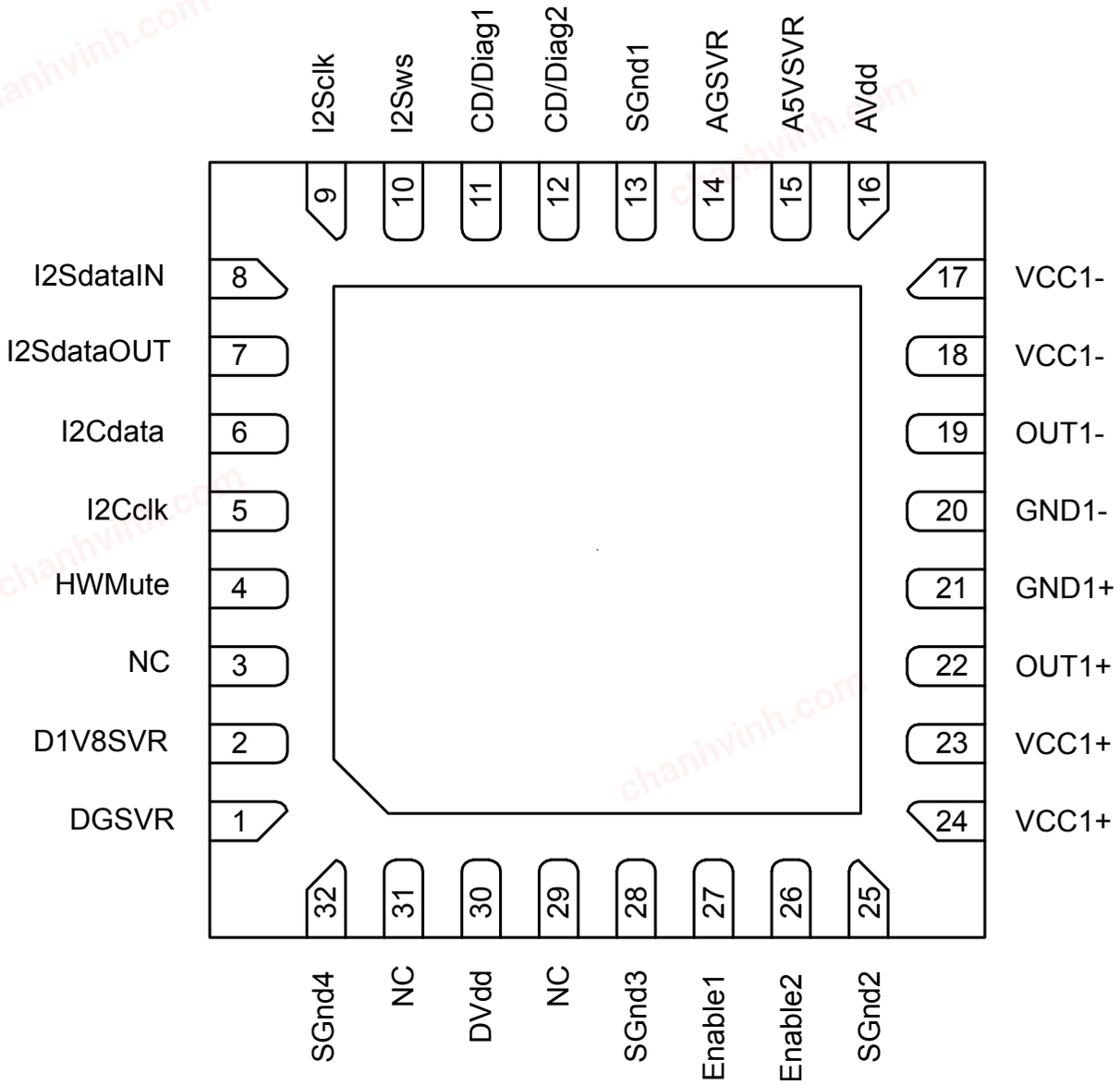

chanhvinh.com

Table 1. Pins description

N#	Pin	Function	Definition	Internal structure
1	DGSVR	Negative digital supply (Internally generated)	Internal Regulator	-
2	D1V8SVR	Positive digital supply (Internally generated)	Internal Regulator	-
3	NC	Connected to GND	-	-
4	HWMute	Hardware mute pin	Input	-
5	I^2Cclk	I^2C Clock	Input	-
6	I^2Cdata	I^2C Data	Input/Output	Open-Drain
7	I^2SdataOUT	I^2S/TDM Data	Output	Push-Pull
8	I^2SdataIN	I^2S/TDM Data	Input	-
9	I^2Sclk	I^2S/TDM Clock	Input	-
10	I^2Sws	I^2S/TDM Sync	Input	-
11	CD/Diag1	Clipping detector and diagnostic	Output	Open-Drain
12	CD/Diag2	Clipping detector and diagnostic	Output	Open-Drain
13	SGnd1	Ground of lower side of circuit, connected to GND	Supply	-
14	AGSVR	Negative digital supply (Internally generated)	Internal Regulator	-
15	A5VSVR	Positive digital supply (Internally generated)	Internal Regulator	-
16	AVdd	Analog supply	Supply	-
17	VCC1-	Channel 1, half bridge minus, Power Supply	Supply	-
18	VCC1-	Channel 1, half bridge minus, Power Supply	Supply	-
19	OUT1-	Channel 1, half bridge minus	Output	-
20	GND1-	Channel 1, half bridge minus, Power Ground	Supply	-
21	GND1+	Channel 1, half bridge plus, Power Ground	Supply	-
22	OUT1+	Channel 1, half bridge plus	Output	-
23	VCC1+	Channel 1, half bridge plus, Power Supply	Supply	-
24	VCC1+	Channel 1, half bridge plus, Power Supply	Supply	-
25	SGnd2	Ground of upper side of circuit, connected to GND	Supply	-
26	Enable2	Enable pin	Input	-
27	Enable1	Enable pin	Input	-
28	SGnd3	Ground of upper side of circuit, connected to GND	Supply	-
29	NC	Connected to GND	-	-
30	DVdd	Digital supply	Supply	-
31	NC	Connected to GND	-	-
32	SGnd4	Ground of upper side of circuit, connected to GND	Supply	-

chanhvinh.com

Figure 3. **Application diagram**

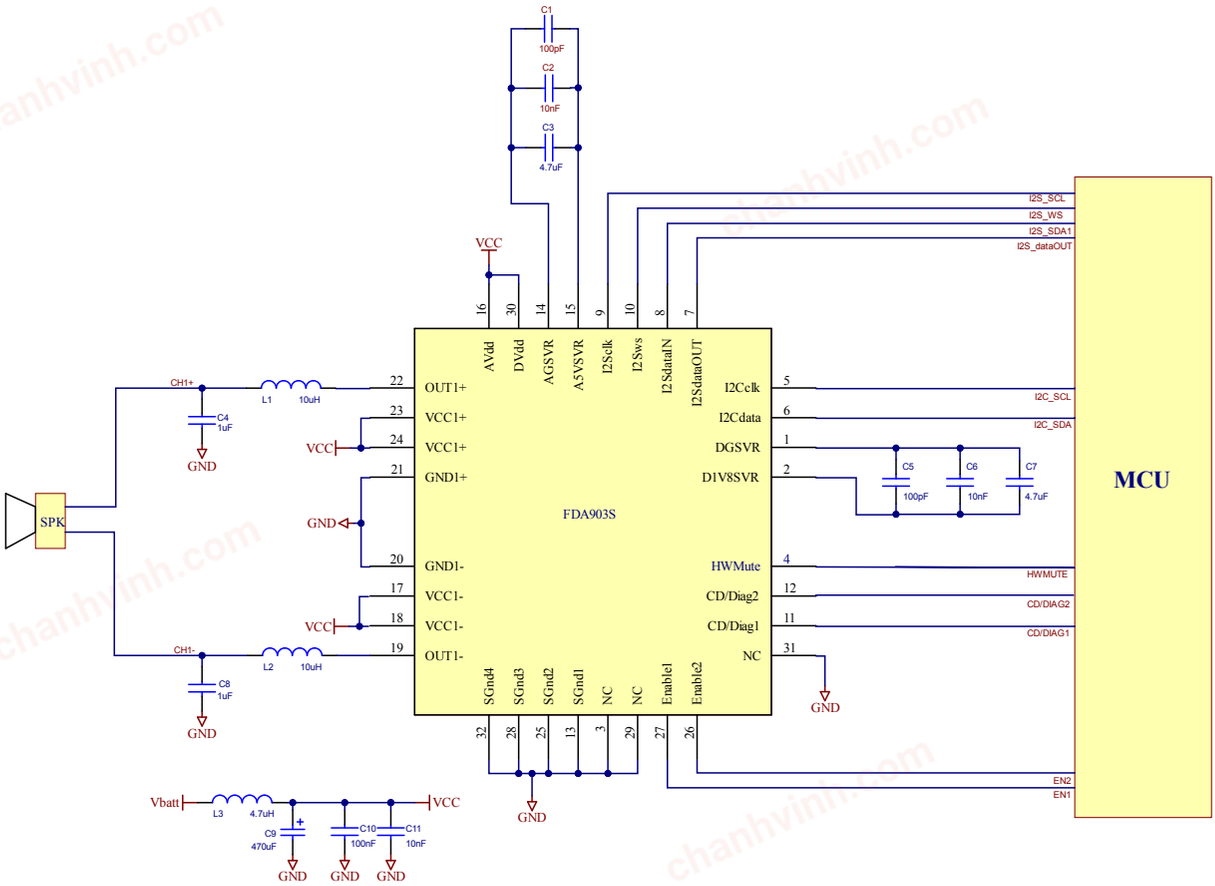

chanhvinh.com

2 Electrical specifications

2.1 Thermal data

Table 2. **Thermal resistance**

Symbol	Parameter	Value	Unit
$R_{th\ j\text{-}a\text{-}2s2pv}$	Thermal resistance junction-to-ambient (2s2p+vias)	32.4	°C/W

Note:
- *2s2p is referred to a board with 2 layers dedicated to the signals and 2 layers dedicated to the power signals and supplies.*
- *from simulation according to Jedec best practice guidelines (JESD51-12) TAMB = 25 °C Infinite Heat Sink.*

chanhvinh.com

3 General information

The FDA903S is a fully digital single channel class-D audio amplifier with feedback before LC filter, designed for compact and low-cost Application, such as Telematics and eCall. The feedback before LC architecture has been chosen for allowing smaller components for the demodulator filter, saving cost and space occupation.

The I^2S interface is used to provide the audio bit stream, with several sampling frequency from 8 kHz up to 96 kHz. The standard format is used for 4 channels applications, while the TDM allows to work up to 16 channels. The I^2C interface is used to communicate and control the state of the power amplifier, perform the diagnostic and other features.

The FDA903S embeds an internal 24 bits DAC with 100 dB of resolution. Thanks to interpolation and noise shaping, the digital signal processing allows to reach up a good audio performance in a small device area. The internal PLL uses the clock frequency of the bit stream to generate the internal clock for the digital part and PWM for the outputs.

The innovative self-diagnostic algorithm, available also in play, allows the automatic detection of wrong load connections or variation of the load and provides this information through the I^2C bus to an external microcontroller.

The amplifier signals full in-play diagnostics including real-time load-current monitoring through I^2S or I^2C interfaces, enabling ASIL-A certification of safety-related applications like warning-tone generators and acoustic vehicle alerting systems (AVAS). A digital admittance meter is also provided, ensuring systems containing the FDA903S can meet the most demanding requirements of automotive OEMs.

The communication to the microcontroller is improved by two dedicated CD/Diag. All the useful information, such as thermal warnings, input and output offset detection, and some more can be selected by the I^2C setting and addressed to the one of the CD/Diag pins. Furthermore, one of these pins could be used to synchronize other devices on the platform for better EMC management.

chanhvinh.com

4 Package information

In order to meet environmental requirements, ST offers these devices in different grades of ECOPACK packages, depending on their level of environmental compliance. ECOPACK specifications, grade definitions and product status are available at: www.st.com. ECOPACK is an ST trademark.

4.1 QFN32 5x5x1 (3.5x3.5 32L exp. pad down) package information

Figure 4. QFN 5X5 EP 3.5x3.5 32L WITH WETTABLE FLANKS package outline

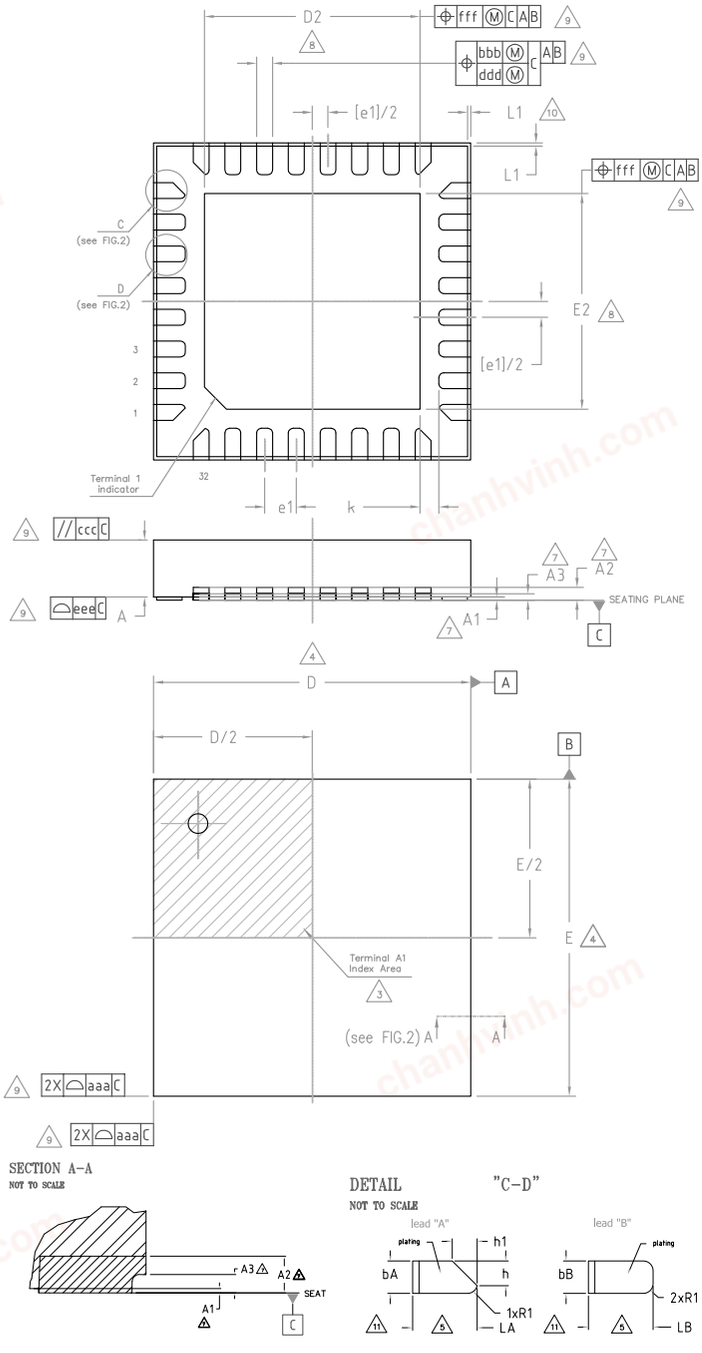

chanhvinh.com

Table 3. **QFN 5X5 EP 3.5x3.5 32L WITH WETTABLE FLANKS mechanical data**

Symbol	Dimension in mm		
	Min.	Typ.	Max.
A	0.80	0.90	1.00
A1	0	-	0.05
A2	-	0.2 REF	-
A3	0.10	-	-
D		5.00 BSC	
D2	3.40	3.50	3.60
E		5.00 BSC	
E2	3.40	3.50	3.60
e1		0.50 BSC	
k	0.20	-	-
L1	-	-	0.05
La	0.40	0.50	0.60
bA	0.20	0.25	0.30
h	-	0.19 REF	-
h1	-	0.19 REF	-
LB	0.45	0.50	0.55
bB	0.20	0.25	0.30
N		32	
R1	-	-	0.10
Tolerance of form and position			
aaa	-	0.15	-
bbb	-	0.10	-
ccc	-	0.10	-
ddd	-	0.05	-
eee	-	0.08	-
fff	-	0.10	-

chanhvinh.com

Revision history

Table 4. **Document revision history**

Date	Version	Changes
07-Mar-2022	1	Initial release.
29-Jun-2022	2	Updated *Section Features*.
09-Jan-2023	3	Updated Section Device summary. Minor text changes in Section Features.

chanhvinh.com

chanhvinh.com

Contents

1 Block diagram and pins description 3
2 Electrical specifications 7
2.1 Thermal data 7
3 General information 8
4 Package information 9
4.1 QFN32 5x5x1 (3.5x3.5 32L exp. pad down) package information 9
Revision history 11

chanhvinh.com

List of tables

Table 1. Pins description 5
Table 2. Thermal resistance. 7
Table 3. QFN 5X5 EP 3.5x3.5 32L WITH WETTABLE FLANKS mechanical data 10
Table 4. Document revision history 11

chanhvinh.com

chanhvinh.com

List of figures

Figure 1. Block diagram 3
Figure 2. Pin connection diagram (bottom view) 4
Figure 3. Application diagram. 6
Figure 4. QFN 5X5 EP 3.5x3.5 32L WITH WETTABLE FLANKS package outline 9

chanhvinh.com

IMPORTANT NOTICE – READ CAREFULLY

STMicroelectronics NV and its subsidiaries (“ST”) reserve the right to make changes, corrections, enhancements, modifications, and improvements to ST products and/or to this document at any time without notice. Purchasers should obtain the latest relevant information on ST products before placing orders. ST products are sold pursuant to ST’s terms and conditions of sale in place at the time of order acknowledgment.

Purchasers are solely responsible for the choice, selection, and use of ST products and ST assumes no liability for application assistance or the design of purchasers’ products.

No license, express or implied, to any intellectual property right is granted by ST herein.

Resale of ST products with provisions different from the information set forth herein shall void any warranty granted by ST for such product.

ST and the ST logo are trademarks of ST. For additional information about ST trademarks, refer to www.st.com/trademarks. All other product or service names are the property of their respective owners.

Information in this document supersedes and replaces information previously supplied in any prior versions of this document.

© 2023 STMicroelectronics – All rights reserved