chanhvinh.com

BTA16, BTB16
T1610, T1635

16 A Snubberless™, logic level and standard Triacs

Features

- Medium current Triac
- Low thermal resistance with clip bonding
- Low thermal resistance insulation ceramic for insulated BTA
- High commutation (4Q) or very high commutation (3Q) capability
- BTA series UL1557 certified (File ref: 81734)
- RoHS (2002/95/EC) compliant
- Insulated tab (BTA series, rated at 2500 V_{RMS})

Applications

- Snubberless versions (BTA/BTB...W and T1635) especially recommended for use on inductive loads, because of their high commutation performances
- On/off or phase angle function in applications such as static relays, light dimmers and appliance motor speed controllers

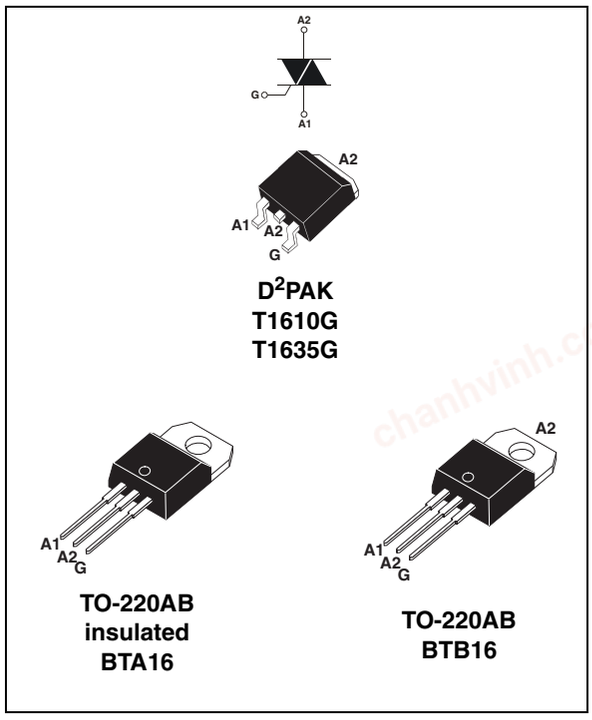

Description

Available either in through-hole or surface-mount packages, the BTA16, BTB16, T1610 and T1635 Triacs series are suitable for general purpose mains power AC switching.

Table 1. Device summary

Symbol	Parameter	BTA16 (1)	BTB16	T1610	T1635
$I_{T(RMS)}$	On-state rms current	16	16	16	16
V_{DRM}/V_{RRM}	Repetitive peak off-state voltage	600/800	600/800	600/800	600/800
I_{GT} (Snubberless)	Triggering gate current	35/50	35/50	-	35
I_{GT} (logic level)	Triggering gate current	10	10	10	-
I_{GT} (standard)	Triggering gate current	25/50	25/50	-	-

1. Insulated

TM: Snubberless is a trademark of STMicroelectronics

chanhvinh.com

1 Characteristics

Table 2. Absolute maximum ratings

Symbol	Parameter			Value	Unit
$I_{T(RMS)}$	On-state rms current (full sine wave)	D^2PAK / TO-220AB	T_c = 100 °C	16	A
		TO-220AB insulated	T_c = 86 °C		
I_{TSM}	Non repetitive surge peak on-state current (full cycle, T_j initial = 25 °C)	F = 50 Hz	t = 20 ms	160	A
		F = 60 Hz	t = 16.7 ms	168	
I^2t	I^2t value for fusing	t_p = 10 ms		144	A^2s
dI/dt	Critical rate of rise of on-state current I_G = 2 x I_{GT} , $t_r \leq$ 100 ns	F = 120 Hz	T_j = 125 °C	50	A/µs
V_{DSM}/ V_{RSM}	Non repetitive surge peak off-state voltage	t_p = 10 ms	T_j = 25 °C	V_{DRM}/V_{RRM} + 100	V
I_{GM}	Peak gate current	t_p = 20 µs	T_j = 125 °C	4	A
$P_{G(AV)}$	Average gate power dissipation		T_j = 125 °C	1	W
T_{stg}	Storage temperature range			-40 to + 150	
T_j	Maximum operating junction temperature			-40 to + 125	

Table 3. Electrical characteristics (T_j = 25 °C, unless otherwise specified) Snubberless and logic level (3 quadrants)

Symbol	Test conditions	Quadrant		T1610	T1635	BTA16 / BTB16			Unit
						SW	CW	BW	
I_{GT} (1)	V_D = 12 V R_L = 33 Ω	I - II - III	Max.	10	35	10	35	50	mA
V_{GT}		I - II - III	Max.	1.3					V
V_{GD}	V_D = V_{DRM} R_L = 3.3 kΩ T_j = 125 °C	I - II - III	Min.	0.2					V
I_H (2)	I_T = 500 mA		Max.	15	35	15	35	50	mA
I_L	I_G = 1.2 I_{GT}	I - III	Max.	25	50	25	50	70	mA
		II		30	60	30	60	80	
dV/dt (2)	V_D = 67 %V_{DRM} gate open	T_j = 125 °C	Min.	40	500	40	500	1000	V/µs
(dI/dt)c (2)	(dV/dt)c = 0.1 V/µs	T_j = 125 °C	Min.	8.5	-	8.5	-	-	A/ms
	(dV/dt)c = 10 V/µs	T_j = 125 °C		3.0	-	3.0	-	-	
	Without snubber	T_j = 125 °C		-	8.5	-	8.5	14	

1. Minimum IGT is guaranted at 5% of I_{GT} max
2. For both polarities of A2 referenced to A1

chanhvinh.com

Table 4. Electrical characteristics (T_j = 25 °C, unless otherwise specified) standard (4 quadrants)

Symbol	Test conditions	Quadrant		BTA16 / BTB16		Unit
				C	B	
I_{GT} (1)	V_D = 12 V R_L = 33 Ω	I - II - III IV	Max.	25 50	50 100	mA
V_{GT}		ALL	Max.	1.3		V
V_{GD}	$V_D = V_{DRM}$ R_L = 3.3 kΩ T_j = 125 °C	ALL	Min.	0.2		V
I_H (2)	I_T = 500 mA		Max.	25	50	mA
I_L	$I_G = 1.2\ I_{GT}$	I - III - IV	Max.	40	60	mA
		II		80	120	
dV/dt (2)	V_D = 67 %V_{DRM} gate open	T_j = 125 °C	Min.	200	400	V/µs
(dV/dt)c (2)	(dI/dt)c = 7 A/ms	T_j = 125 °C	Min.	5	10	V/µs

1. Minimum IGT is guaranted at 5% of I_{GT} max
2. For both polarities of A2 referenced to A1

Table 5. Static characteristics

Symbol	Test conditions			Value	Unit
V_T (2)	I_{TM} = 22.5 A t_p = 380 µs	T_j = 25 °C	Max.	1.55	V
V_{to} (2)	Threshold voltage	T_j = 125 °C	Max.	0.85	V
R_d (2)	Dynamic resistance	T_j = 125 °C	Max.	25	mΩ
I_{DRM} I_{RRM}	$V_{DRM} = V_{RRM}$	T_j = 25 °C	Max.	5	µA
		T_j = 125 °C		2	mA

Table 6. Thermal resistance

Symbol	Parameter			Value	Unit
$R_{th(j-c)}$	Junction to case (AC)		D^2PAK / TO-220AB	1.2	°C/W
			TO-220AB insulated	2.1	
$R_{th(j-a)}$	Junction to ambient	$S^{(1)}$ = 1 cm^2	D^2PAK	45	°C/W
			TO-220AB / TO-220AB insulated	60	

1. S = Copper surface under tab

chanhvinh.com

Figure 1. Maximum power dissipation versus on-state rms current (full cycle)

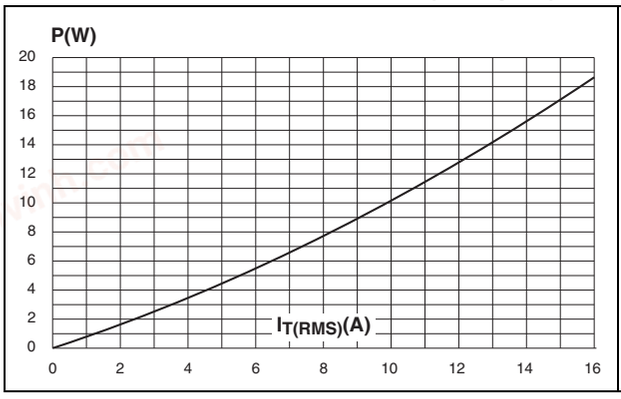

Figure 2. On-state rms current versus case temperature (full cycle)

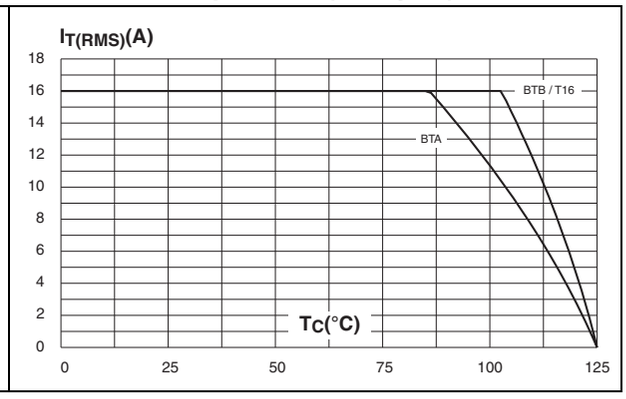

Figure 3. On-state rms current versus ambient temperature (full cycle)

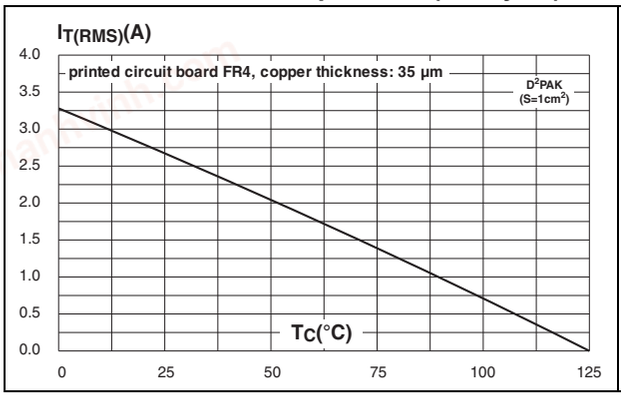

Figure 4. Relative variation of thermal impedance versus pulse duration

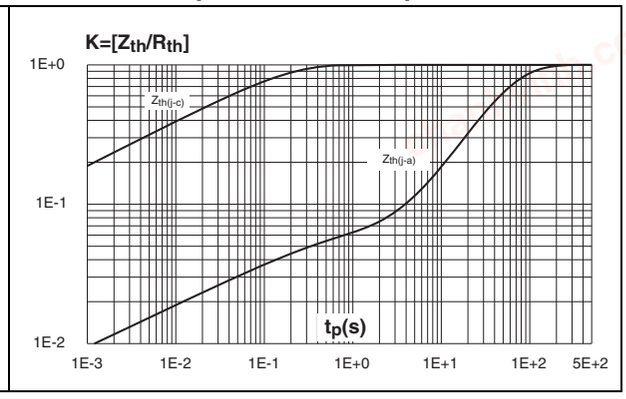

Figure 5. On-state characteristics (maximum values)

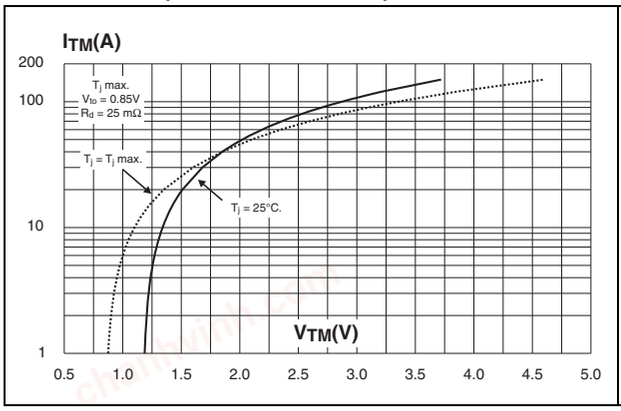

Figure 6. Surge peak on-state current versus number of cycles

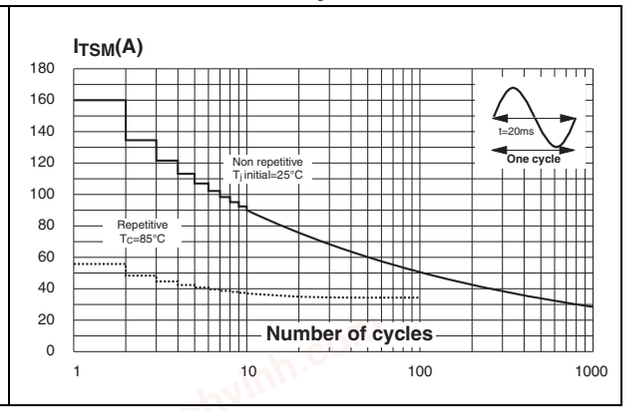

chanhvinh.com

Figure 7. Non-repetitive surge peak on-state current for a sinusoidal

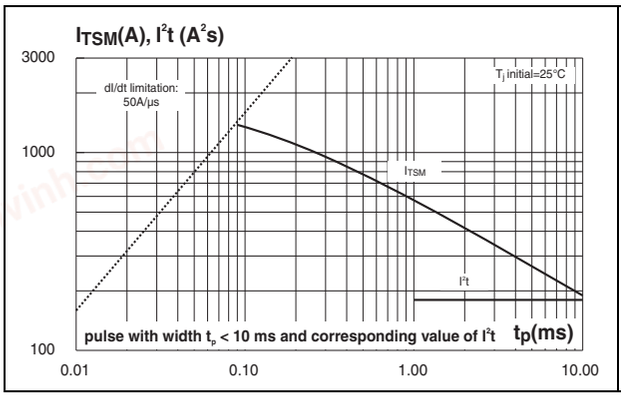

Figure 8. Relative variation of gate trigger current

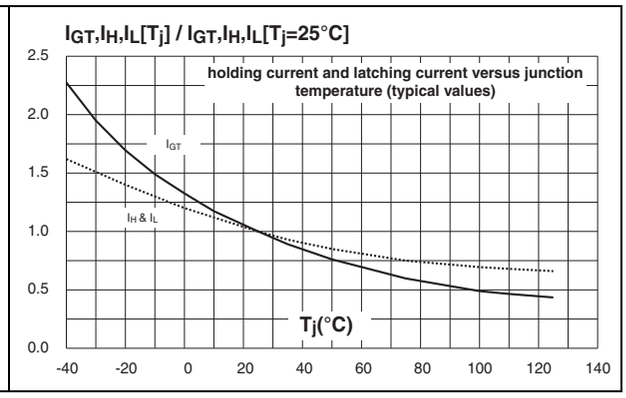

Figure 9. Relative variation of critical rate of decrease of main current versus (dV/dt)c (typical values)

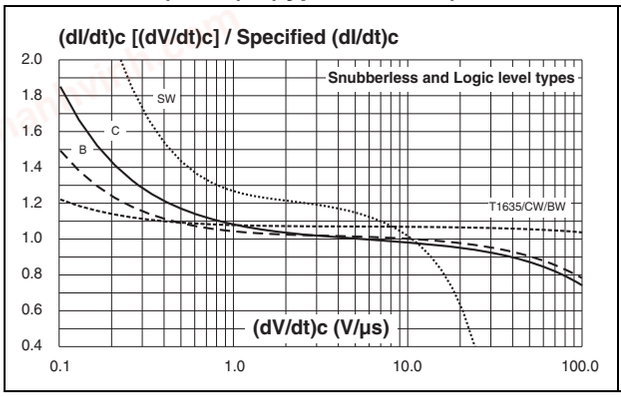

Figure 10. Relative variation of critical rate of decrease of main current versus (dV/dt)c (typical values)

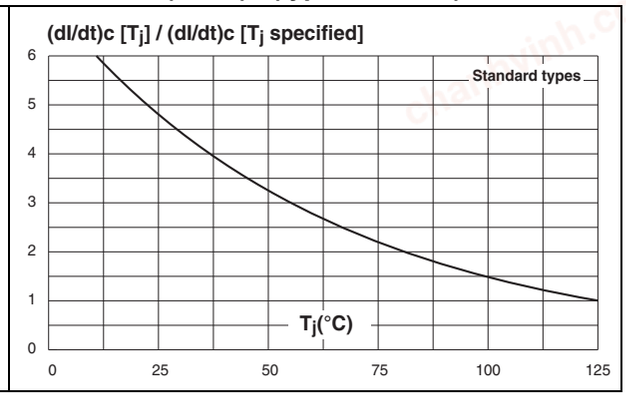

Figure 11. D²PAK thermal resistance junction to ambient versus copper surface under tab (printed circuit board FR4, copper thickness: 35 µm)

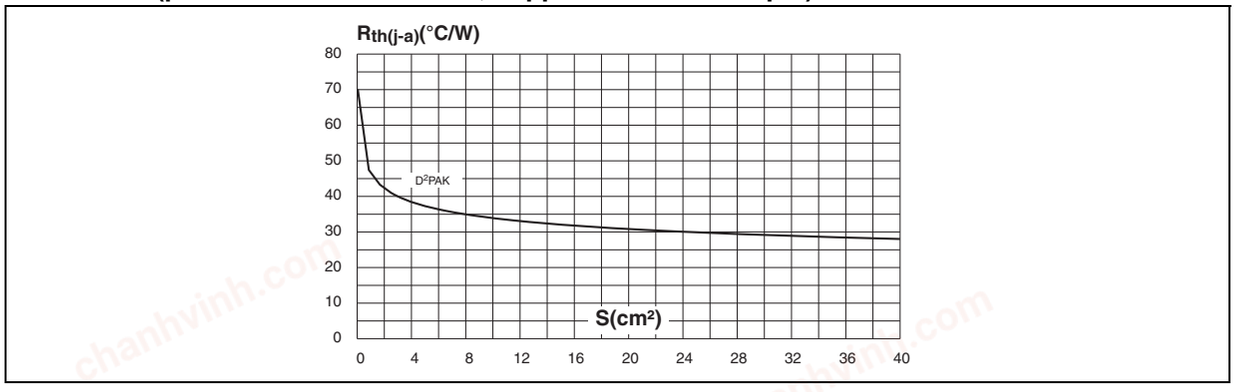

chanhvinh.com

2 Ordering information

Figure 12. Ordering information scheme (BTA16 and BTB16 series)

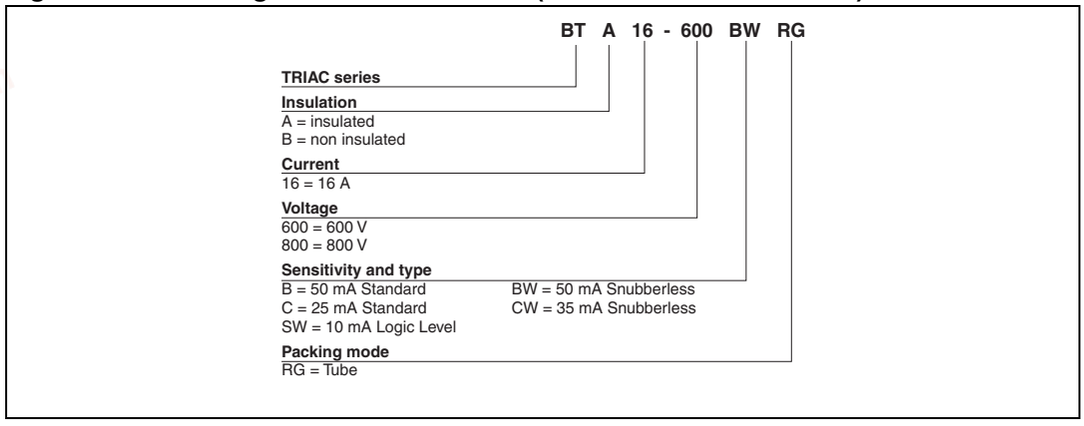

Figure 13. Ordering information scheme (T16 series)

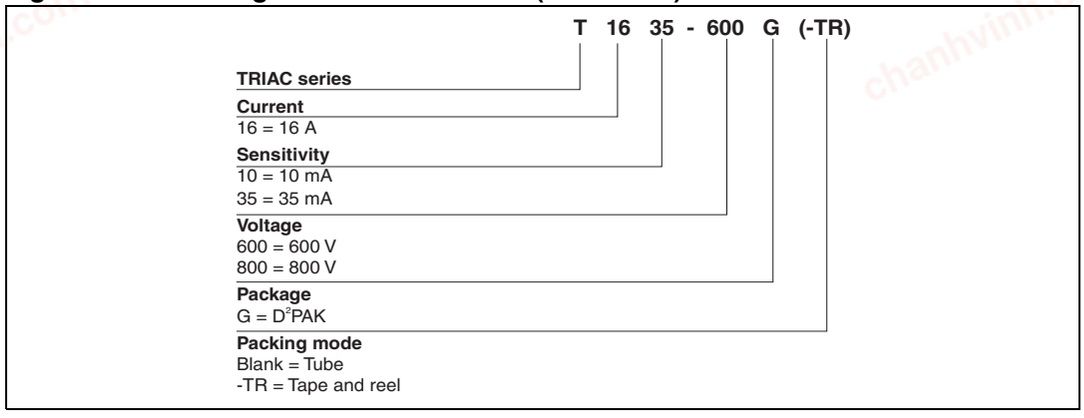

Table 7. Product selector

Device[1]	Voltage (xxx)		Sensitivity	Type	Package
	600 V	800 V			
BTA/BTB16-xxxB	X	X	50 mA	Standard	TO-220AB
BTA/BTB16-xxxBW	X	X	50 mA	Snubberless	TO-220AB
BTA/BTB16-xxxC	X		25 mA	Standard	TO-220AB
BTA/BTB16-xxxCW	X	X	35 mA	Snubberless	TO-220AB
BTA/BTB16-xxxSW	X	X	10 mA	Logic level	TO-220AB
T1610-xxxG	X	X	10 mA	Logic level	D²PAK
T1635-xxxG	X	X	35 mA	Snubberless	D²PAK

1. **BTB:** non insulated TO-220AB package

chanhvinh.com

3 Package information

- Epoxy meets UL94, V0
- Recommended torque value: 0.4 to 0.6 N·m

In order to meet environmental requirements, ST offers these devices in different grades of ECOPACK® packages, depending on their level of environmental compliance. ECOPACK® specifications, grade definitions and product status are available at: www.st.com. ECOPACK® is an ST trademark.

Table 8. D²PAK dimensions

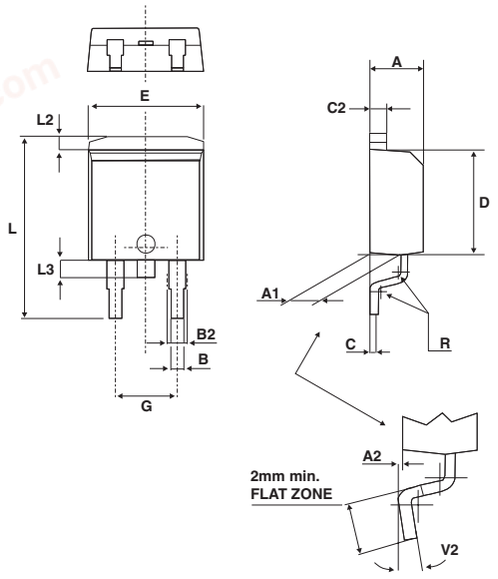

Ref.	Dimensions					
	Millimeters			Inches		
	Min.	Typ.	Max.	Min.	Typ.	Max.
A	4.30		4.60	0.169		0.181
A1	2.49		2.69	0.098		0.106
A2	0.03		0.23	0.001		0.009
B	0.70		0.93	0.027		0.037
B2	1.25	1.40		0.048	0.055	
C	0.45		0.60	0.017		0.024
C2	1.21		1.36	0.047		0.054
D	8.95		9.35	0.352		0.368
E	10.00		10.28	0.393		0.405
G	4.88		5.28	0.192		0.208
L	15.00		15.85	0.590		0.624
L2	1.27		1.40	0.050		0.055
L3	1.40		1.75	0.055		0.069
R	0.40			0.016		
V2	0°		8°	0°		8°

Figure 14. Footprint (dimensions in mm)

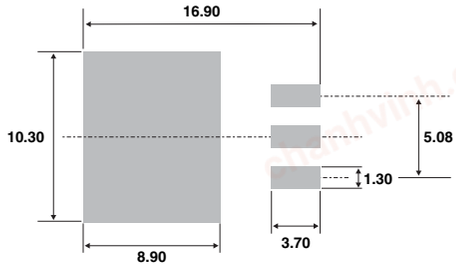

chanhvinh.com

Table 9. TO-220AB (non-insulated and insulated) dimensions

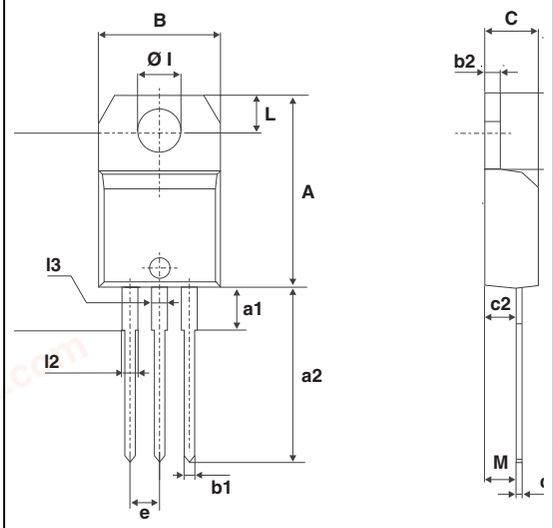

Ref.	Dimensions					
	Millimeters			Inches		
	Min.	Typ.	Max.	Min.	Typ.	Max.
A	15.20		15.90	0.598		0.625
a1		3.75			0.147	
a2	13.00		14.00	0.511		0.551
B	10.00		10.40	0.393		0.409
b1	0.61		0.88	0.024		0.034
b2	1.23		1.32	0.048		0.051
C	4.40		4.60	0.173		0.181
c1	0.49		0.70	0.019		0.027
c2	2.40		2.72	0.094		0.107
e	2.40		2.70	0.094		0.106
F	6.20		6.60	0.244		0.259
ØI	3.75		3.85	0.147		0.151
l4	15.80	16.40	16.80	0.622	0.646	0.661
L	2.65		2.95	0.104		0.116
l2	1.14		1.70	0.044		0.066
l3	1.14		1.70	0.044		0.066
M		2.60			0.102	

chanhvinh.com

4 Ordering information

Table 10. Ordering information

Order code[1]	Marking[1]	Package	Weight	Base qty	Delivery mode
BTA16-xxxyzRG	BTA16xxxyz	TO-220AB	2.3 g	50	Tube
BTB16-xxxyzRG	BTB16xxxyz	TO-220AB	2.3 g	50	Tube
T1610-xxxG-TR	T1610xxxG	D^2PAK	1.5 g	1000	Tape and reel
T1635-xxxG	T1635xxxG			50	Tube
T1635-xxxG-TR	T1635xxxG			1000	Tape and reel

1. xxx = voltage, y = sensitivity, z = type

5 Revision history

Table 11. Document revision history

Date	Revision	Changes
Oct-2002	6A	Last update.
13-Feb-2006	7	TO-220AB delivery mode changed from bulk to tube. ECOPACK statement added.
03-Jul-2009	8	Added part number T1610.
11-Mar-2010	9	Updated value for V_{DSM}/V_{RSM} in *Table 2*. Updated temperature in *Table 2* from 15 °C to 86 °C.

chanhvinh.com

Please Read Carefully:

Information in this document is provided solely in connection with ST products. STMicroelectronics NV and its subsidiaries (“ST”) reserve the right to make changes, corrections, modifications or improvements, to this document, and the products and services described herein at any time, without notice.

All ST products are sold pursuant to ST’s terms and conditions of sale.

Purchasers are solely responsible for the choice, selection and use of the ST products and services described herein, and ST assumes no liability whatsoever relating to the choice, selection or use of the ST products and services described herein.

No license, express or implied, by estoppel or otherwise, to any intellectual property rights is granted under this document. If any part of this document refers to any third party products or services it shall not be deemed a license grant by ST for the use of such third party products or services, or any intellectual property contained therein or considered as a warranty covering the use in any manner whatsoever of such third party products or services or any intellectual property contained therein.

UNLESS OTHERWISE SET FORTH IN ST’S TERMS AND CONDITIONS OF SALE ST DISCLAIMS ANY EXPRESS OR IMPLIED WARRANTY WITH RESPECT TO THE USE AND/OR SALE OF ST PRODUCTS INCLUDING WITHOUT LIMITATION IMPLIED WARRANTIES OF MERCHANTABILITY, FITNESS FOR A PARTICULAR PURPOSE (AND THEIR EQUIVALENTS UNDER THE LAWS OF ANY JURISDICTION), OR INFRINGEMENT OF ANY PATENT, COPYRIGHT OR OTHER INTELLECTUAL PROPERTY RIGHT.

UNLESS EXPRESSLY APPROVED IN WRITING BY AN AUTHORIZED ST REPRESENTATIVE, ST PRODUCTS ARE NOT RECOMMENDED, AUTHORIZED OR WARRANTED FOR USE IN MILITARY, AIR CRAFT, SPACE, LIFE SAVING, OR LIFE SUSTAINING APPLICATIONS, NOR IN PRODUCTS OR SYSTEMS WHERE FAILURE OR MALFUNCTION MAY RESULT IN PERSONAL INJURY, DEATH, OR SEVERE PROPERTY OR ENVIRONMENTAL DAMAGE. ST PRODUCTS WHICH ARE NOT SPECIFIED AS "AUTOMOTIVE GRADE" MAY ONLY BE USED IN AUTOMOTIVE APPLICATIONS AT USER’S OWN RISK.

Resale of ST products with provisions different from the statements and/or technical features set forth in this document shall immediately void any warranty granted by ST for the ST product or service described herein and shall not create or extend in any manner whatsoever, any liability of ST.

ST and the ST logo are trademarks or registered trademarks of ST in various countries.

Information in this document supersedes and replaces all information previously supplied.

The ST logo is a registered trademark of STMicroelectronics. All other names are the property of their respective owners.

© 2010 STMicroelectronics - All rights reserved

STMicroelectronics group of companies

Australia - Belgium - Brazil - Canada - China - Czech Republic - Finland - France - Germany - Hong Kong - India - Israel - Italy - Japan - Malaysia - Malta - Morocco - Philippines - Singapore - Spain - Sweden - Switzerland - United Kingdom - United States of America

www.st.com