chanhvinh.com

FAST MOVING TECHNOLOGY

LK-4A-F10



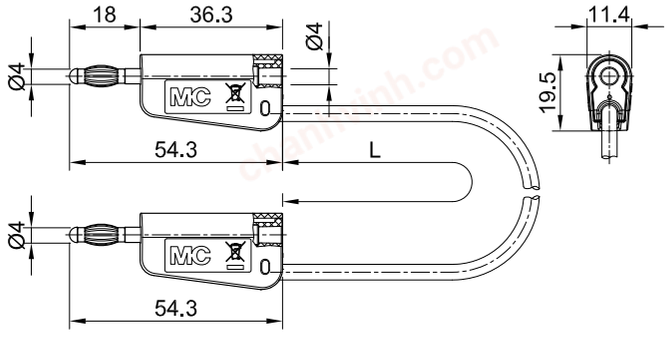

Item number 64.1031- ☐ *

Highly flexible, with stackable Ø 4 mm MULTILAM plugs on both ends.

Technical data	
Diameter of plug system	4 mm
Rated Values	30 V, 19 A / 60 V, 19 A
Surface treatment electrical contact	Au
Base material electrical contact	CuZn
Standard color(s) *	20 21 22 23 24 25 26 27 28 29
Lead lengths ☐	025; 050; 075; 100; 150; 200 cm
Lead insulation	PVC
Lead cross section	1,0 mm²
Test accessory acc. to	IEC EN 61010-031
User-Information	I 096

Staubli is a trademark of Stäubli International AG, registered in Switzerland and other countries. We reserve the right to modify product specifications without prior notice. © Stäubli 2022 | ec.marcom@staubli.com | Photo credits: Stäubli | **www.staubli.com**