chanhvinh.com

R6 Hinge

Concealed · 90° Opening



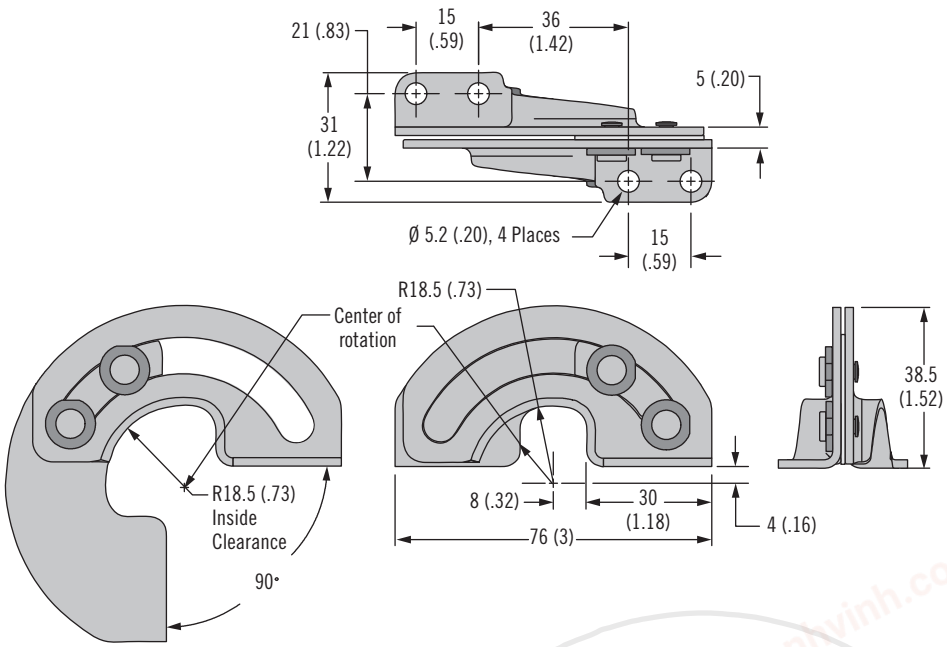

ACTUAL SIZE

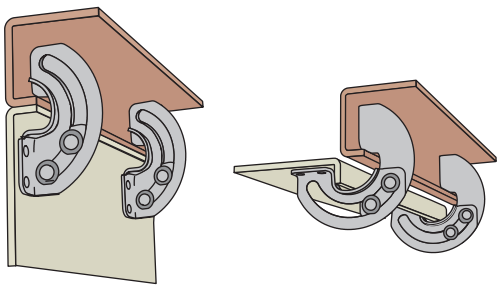

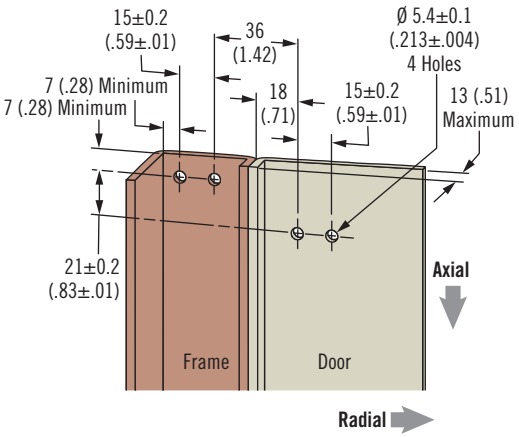

Part Number	
Steel	R6-21-11
Stainless steel	R6-21-23

- **Invisible when door is closed**

Material and Finish

Steel, zinc plated, or stainless steel

Performance Details

Zinc Plated Steel
Radial load:
Maximum static load:
625 N (140 lbf)
Average ultimate load:
2235 N (502 lbf)
Axial load:
Maximum static load: 205 N (46 lbf)
Average ultimate load:
420 N (94 lbf)
Stainless Steel
Radial load:
Maximum static load:
525 N (118 lbf)
Average ultimate load:
3035 N (682 lbf)
Axial load:
Maximum static load: 185 N (42 lbf)
Average ultimate load:
475 N (107 lbf)
Maximum holding torque:
18.2 N•m (161 in•lbf)
Operating temperature range:
-40° C (-40° F) to 85° C (185° F)

Installation Notes

Panel thickness exceeding 4 (.16) will require a 45˚ chamfer on both door and frame.
Screws not supplied.
Install using M5 (No. 10)

Part Number

See table

chanhvinh.com



R6 Hinge

Concealed · 180° Opening

- **Invisible when door is closed**
- **Door-stay for horizontal door & lid applications**
- **Corrosion-resistant materials available**

Material and Finish

Steel, zinc plated, or stainless steel

Performance Details

Zinc Plated Steel
Radial load:
Maximum static load:
485 N (109 lbf)
Average ultimate load:
710 N (160 lbf)

Axial load:
Maximum static load: 100 N (23 lbf)
Average ultimate load:
295 N (66 lbf)

Maximum holding torque:
11.8 N•m (104 in•lbf)

Stainless Steel
Radial load:
Maximum static load:
505 N (114 lbf)
Average ultimate load:
1085 N (244 lbf)

Axial load:
Maximum static load: 165 N (37 lbf)
Average ultimate load:
345 N (78 lbf)

Operating temperature range:
-40° C (-40° F) to 85° C (185° F)

Installation Notes

Screws not supplied.
Install using M5 (No. 10) screws or by welding.

Maximum panel thickness is
4 (.16)

Part Number

See table

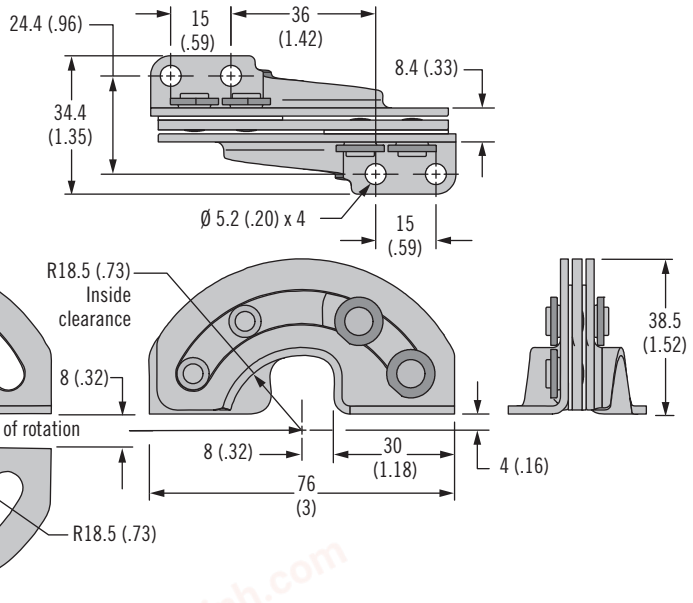

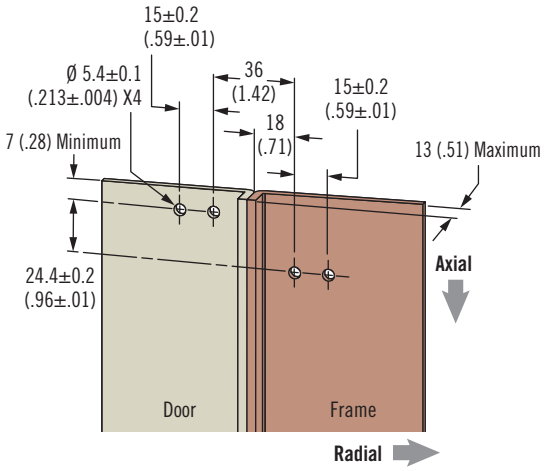

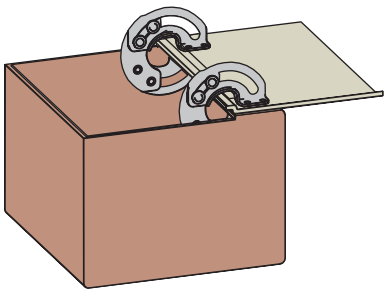

Part Number	
Steel	R6-20-11
Stainless steel	R6-20-23

Dimensions in millimeters (inch) unless otherwise stated

chanhvinh.com

R6 Hinge

Concealed · Hold-open style



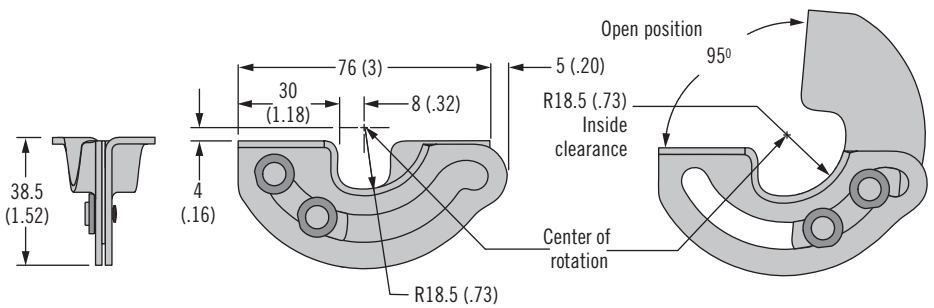

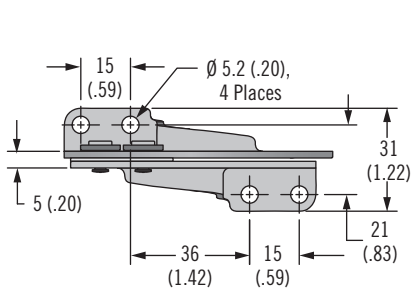

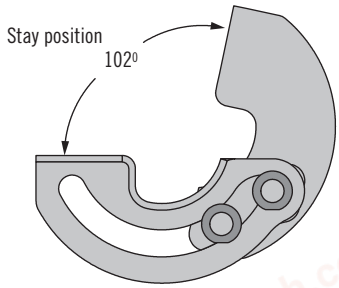

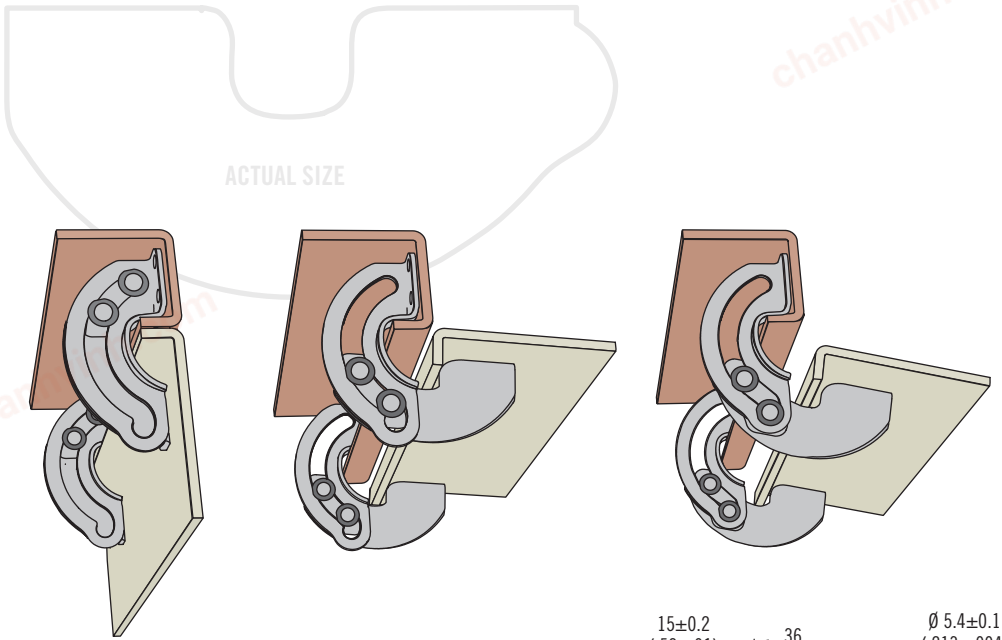

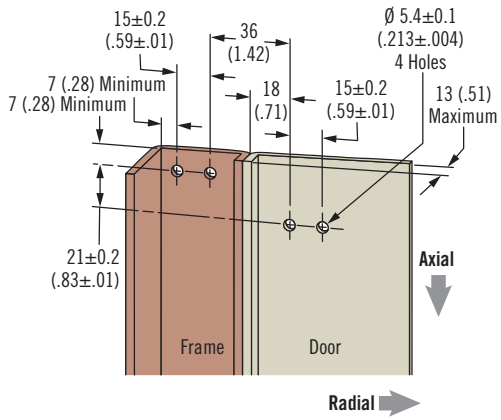

Part Number	
Steel	R6-22-11
Stainless steel	R6-22-23

- **Invisible when door is closed**
- **Holds doors open without secondary mechanical support**

Material and Finish

Steel, zinc plated, or stainless steel

Performance Details

*(loads applied with hinge in stay position)

Zinc Plated Steel
Radial load:
Maximum static load: 155 N (35 lbf)
Average ultimate load: 405 N (91 lbf)

Axial load:
Maximum static load: 200 N (45 lbf)
Average ultimate load: 415 N (93 lbf)

Maximum holding torque:
11.8 N•m (104 in•lbf)

Operating temperature range:
-40°C (-40°F) to 85°C (185°F)

Stainless Steel
Radial load:
Maximum static load: 280 N (63 lbf)
Average ultimate load:
570 N (128 lbf)*

Axial load:
Maximum static load: 305 N (69 lbf)
Average ultimate load:
430 N (97 lbf)

Maximum holding torque:
18.2 N•m (161 in•lbf)*

Operating temperature range:
-40° C (-40° F) to 85° C (185° F)

Installation Notes

Panel thickness exceeding 4 (.16) will require a 45˚ chamfer on both door and frame.

Part Number

See table