chanhvinh.com



R4 Rotary Latch

Light-Duty · Concealed · Single and two stage

- **Ideal for space limited applications**
- **Compatible with wide array of actuators**
- **Integrated bumper for anti-vibration feature**

Material and Finish

Steel, zinc or zinc nickel plated or 304 stainless steel, passivated

Accessories

Cables and retainer clips
see pages 322-323

Notes

Electromechanical rotary latch available see page 20

For electrical actuation option see page 42

Hand Actuation

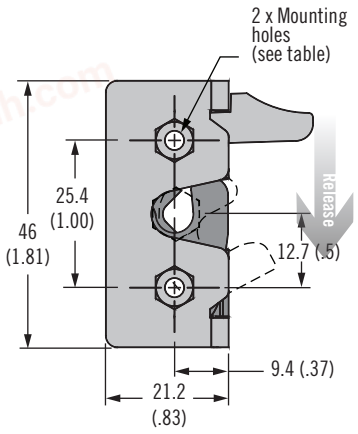

Direct Actuation

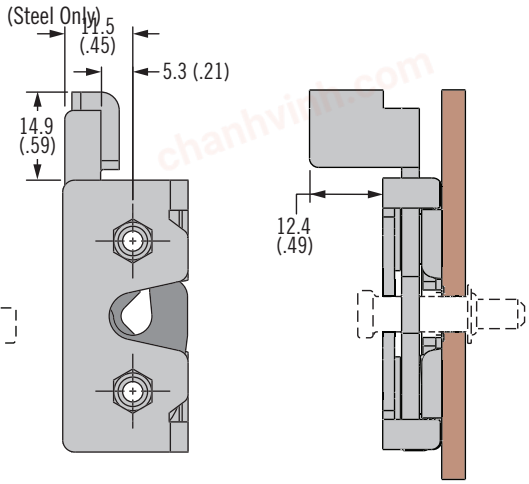

Bottom Actuation

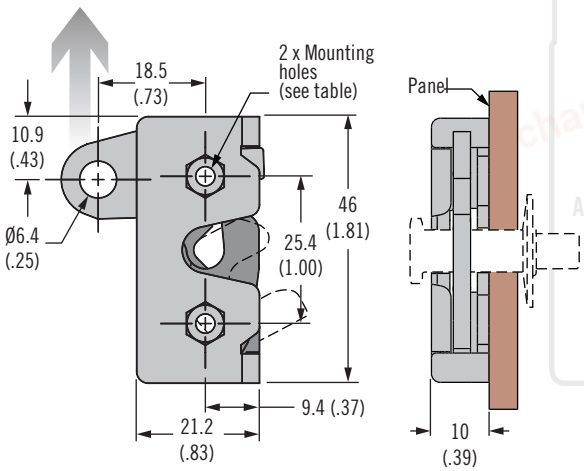

Mounting Bracket

(Option for all Lever Types in Steel)

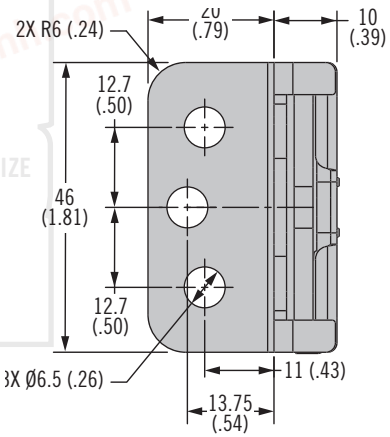

Part Number Selection

S Stage & Actuation
- **2** Single stage
- **4** Two stage

L Lever Type
- **4** Hand Actuation
- **5** Bottom Actuation
- **9A** Direct Actuation (M = 10, 15, and 77 material only)

R4 - 05 - S I - L 0 B - M

I Mounting Style
- **0** 4.5 (.177) thru
- **1** 8-32 thread
- **2** M4 x 0.7 thread
- **3** 4.5 (.177) thru with Mounting Bracket (M = 10, 15, and 77 material only)

B Base style
- **1** Standard
- **5** Integrated bumper version

M Material
- **10** Steel, Zinc Plate
- **15** Steel, Black Zinc Nickel
- **20** Stainless Steel
- **77** Steel, Zinc Nickel

Dimensions in millimeters (inch) unless otherwise stated

southco®

chanhvinh.com

R4 Rotary Latch

Striker bolt · Light-duty · Installation

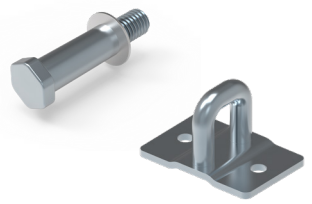

Striker Bolt
(sold separately)

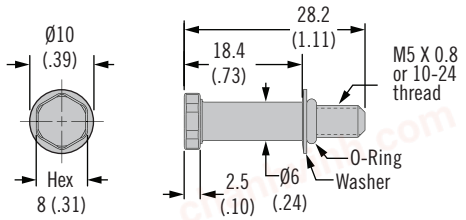

Striker Bolt Part Number		
Part Number	**Thread**	**Material**
R4-90-0511-10	10-24-UNC	Steel
R4-90-0511-20	10-24-UNC	Stainless Steel
R4-90-0521-10	M5 X 0.8	Steel
R4-90-0521-20	M5 X 0.8	Stainless Steel

Molded Striker
(sold separately)

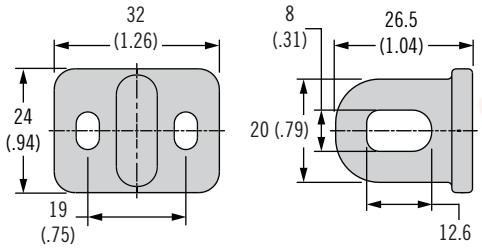

Part Number	
Molded striker	R4-0-61336

- **Strikers for R4-05 series rotary latch**

Material and Finish
Steel, zinc nickel, zinc plated, black zinc nickel, Stainless Steel

Part Number
See tables

Wire Form Strikers
(sold separately)

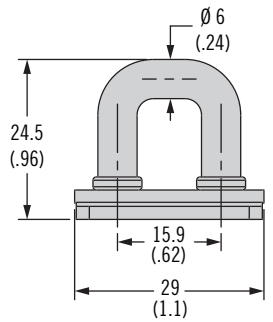

Single Hole Mount
R4-90-0501-XX

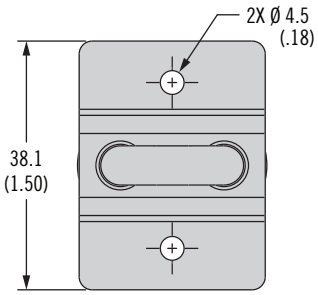

Single Hole Mount

Slot Mount
R4-90-0502-XX

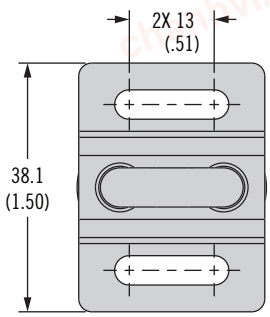

Slot Mount

Wire Form Strikers		
Part Number	**Mount**	**Material**
R4-90-0501-10	Single Hole	Steel, Zinc Plated
R4-90-0501-15	Single Hole	Steel, Black Zinc Nickel
R4-90-0501-20	Single Hole	Stainless Steel
R4-90-0501-77	Single Hole	Steel, Zinc Nickel
R4-90-0502-10	Slot	Steel, Zinc Plated
R4-90-0502-15	Slot	Steel, Black Zinc Nickel
R4-90-0502-20	Slot	Stainless Steel
R4-90-0502-77	Slot	Steel, Zinc Nickel

chanhvinh.com



R4 Rotary Latch

Light-Duty · Concealed · Single and two stage

- **Compatible with wide array of actuators**
- **EN 45545-3 E60 Compliant (Standard version only)**
- **Integrated bumper version for anti-vibration feature**

Material and Finish

Steel, zinc plated or
304 stainless steel, passivated

Accessories

Striker bolts for standard version and integrated bumper version are different. See page 297 for both versions.

Cables and retainer clips
see pages 322-323

Notes

Electromechanical rotary latch available see page 20

Single Stage - Perpendicular (left hand actuation shown)

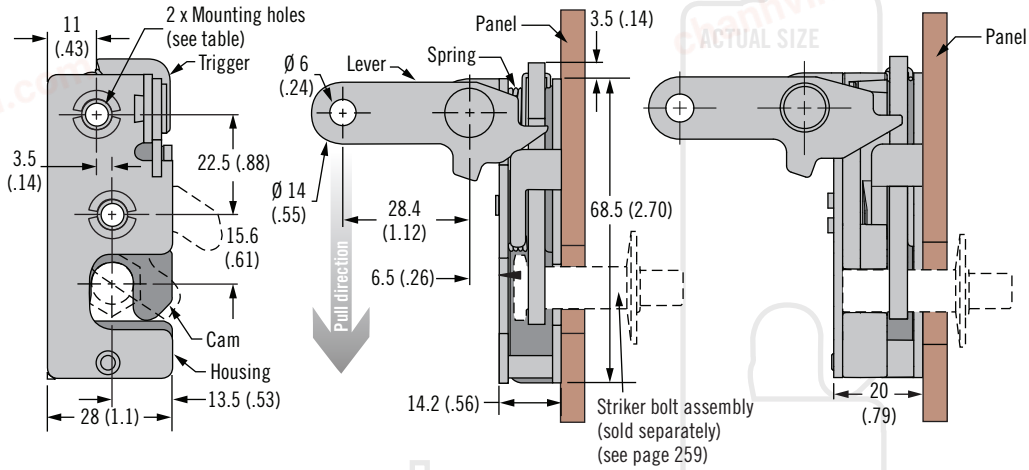

Integrated Bumper Version

(dimensions same as standard version except as shown)

Single Stage - In-Line (left hand actuation shown)

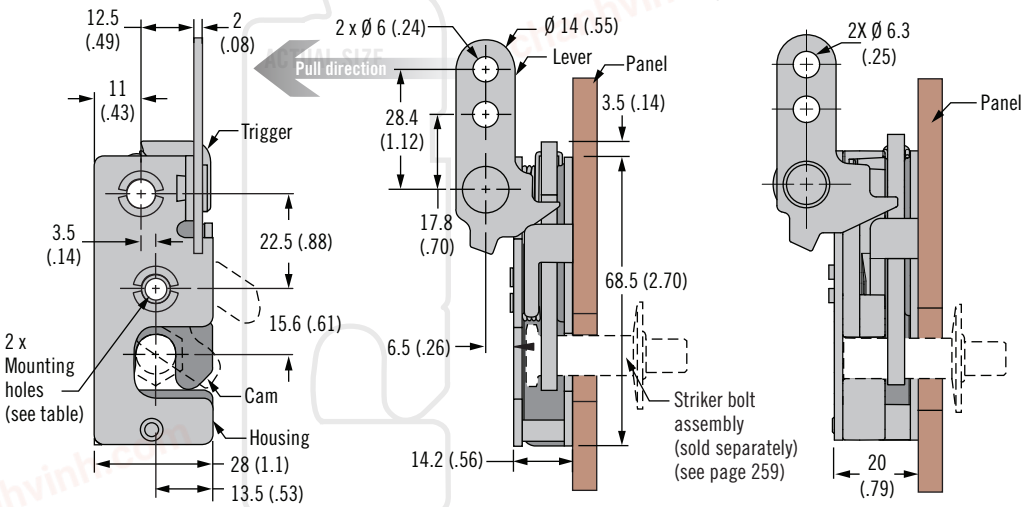

Integrated Bumper Version

(dimensions same as standard version except as shown)

Part Number Selection

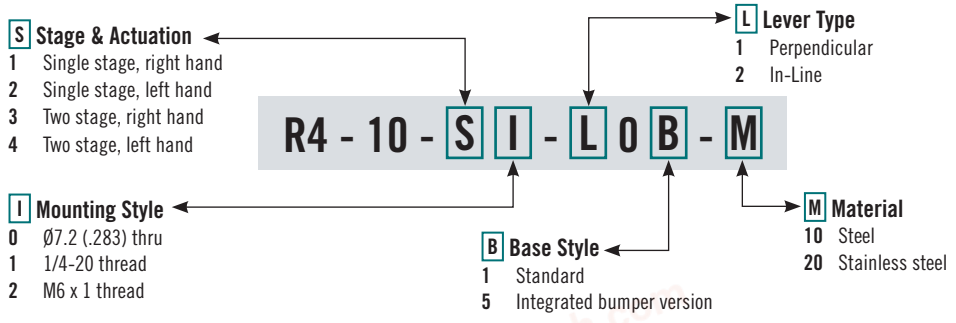

Dimensions in millimeters (inch) unless otherwise stated

chanhvinh.com

R4 Rotary Latch

Light-Duty · Concealed · Single and two stage



Single Stage - Two Point (left hand actuation shown)

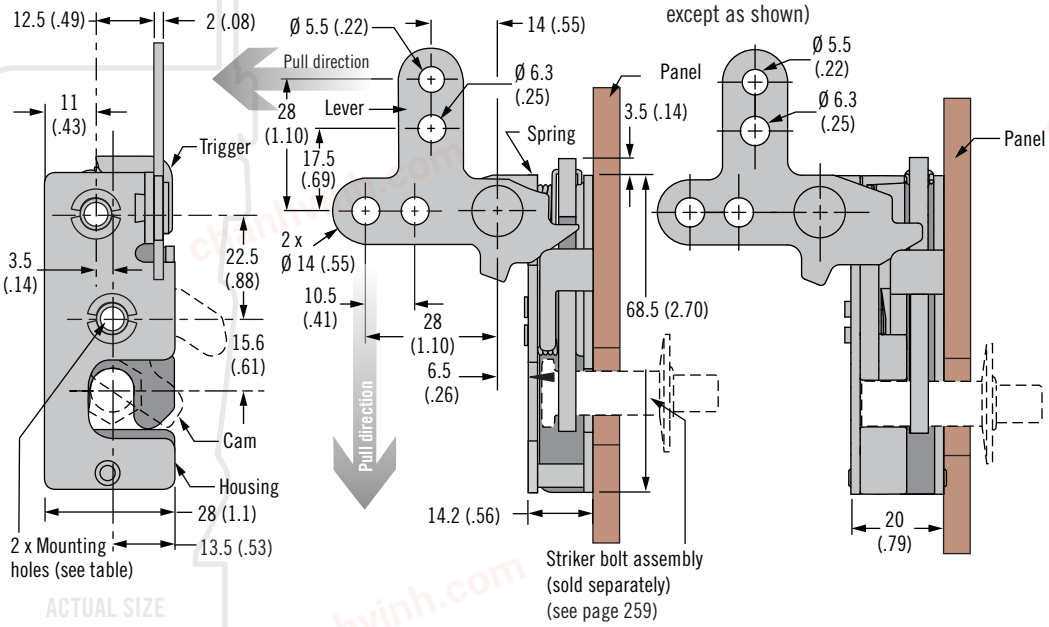

Integrated Bumper Version

(dimensions same as standard version except as shown)

Single Stage - Hand Actuation

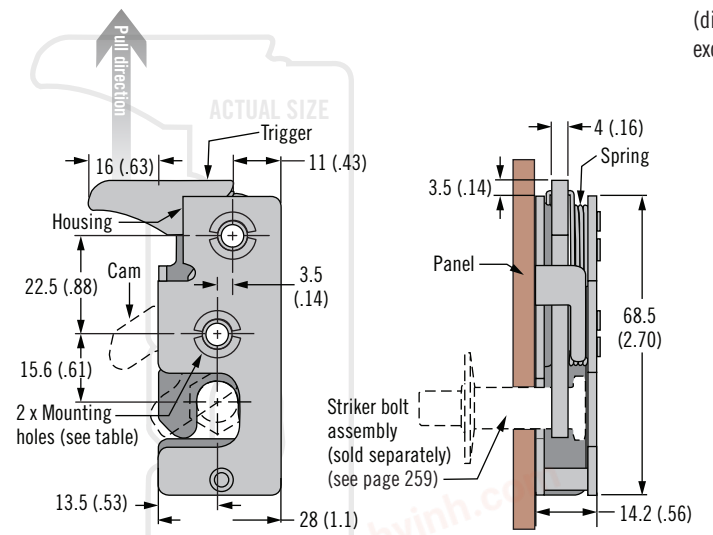

Integrated Bumper Version

(dimensions same as standard version except as shown)

- **Compatible with wide array of actuators**
- **EN 45545-3 E60 Compliant (Standard version only)**
- **Integrated bumper version for anti-vibration feature**

Material and Finish

Steel, zinc plated or
304 stainless steel, passivated

Accessories

Striker bolts for standard version and integrated bumper version are different. See page 297 for both versions.

Cables and retainer clips
see page 322-323

Notes

Electromechanical rotary latch available see page 20

Part Number Selection

S Stage & Actuation
- **1** Single stage, right hand
- **2** Single stage, left hand
- **3** Two stage, right hand
- **4** Two stage, left hand

L Lever Type
- **3** Two point
- **4** Hand actuation

R4 - 10 - S I - L 0 B - M

I Mounting Style
- **0** Ø7.2 (.283) thru
- **1** 1/4-20 thread
- **2** M6 x 1 thread

B Base Style
- **1** Standard
- **5** Integrated bumper version

M Material
- **10** Steel
- **20** Stainless steel

chanhvinh.com



R4 Rotary Latch

Light-Duty · Concealed · Single and two stage

- **Compatible with wide array of actuators**
- **EN 45545-3 E60 Compliant (Standard version only)**
- **Integrated bumper version for anti-vibration feature**

Material and Finish

Steel, zinc plated or
304 stainless steel, passivated

Accessories

Striker bolts for standard version and integrated bumper version are different. See page 297 for both versions.

Cables and retainer clips
see pages 322-323

Notes

Electromechanical rotary latch available see page 20

For electrical actuation option see page 43

Single Stage - Bottom

(left hand actuation shown)

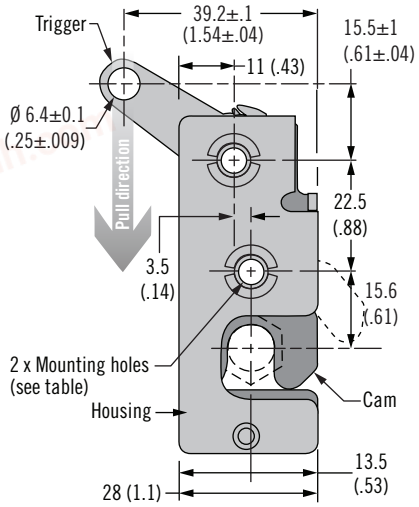

Integrated Bumper Version

(dimensions same as standard version except as shown)

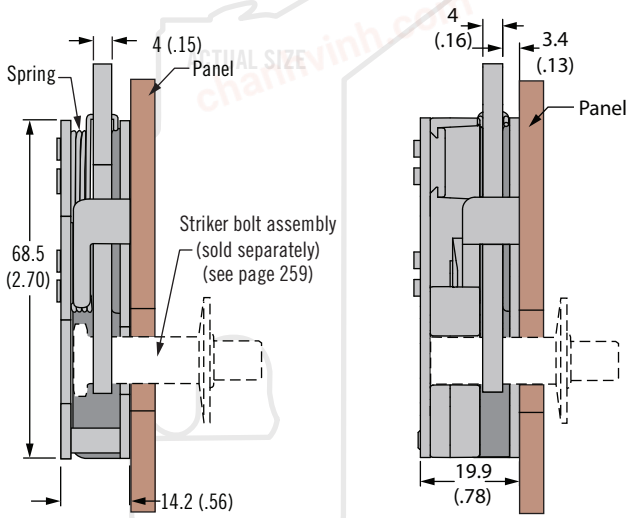

Single Stage - Bottom with Cable Bracket

(Right hand actuation shown)

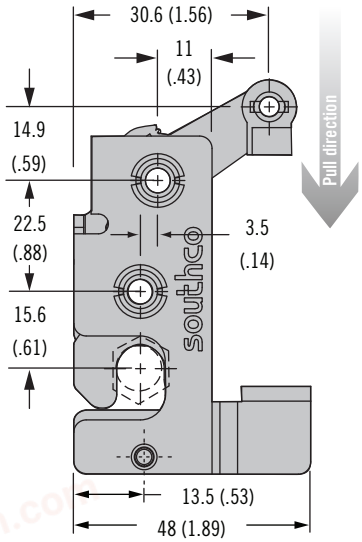

Integrated Bumper Version

(dimensions same as standard version except as shown)

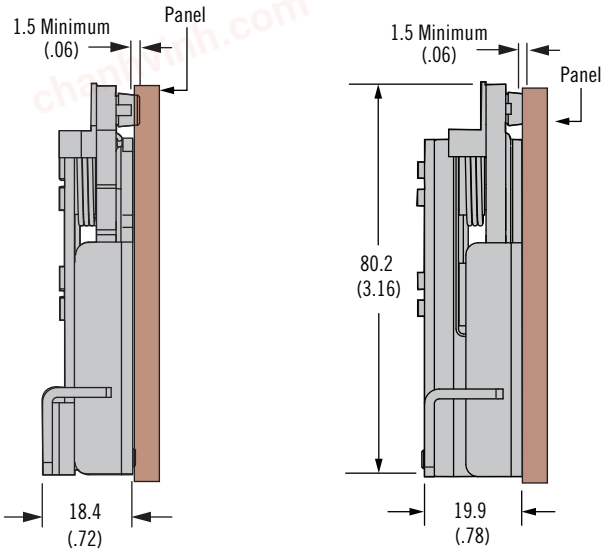

Part Number Selection

R4 - 10 - S I - 5 0 B - M

S Stage & Actuation
- **1** Single stage, right hand
- **2** Single stage, left hand
- **3** Two stage, right hand
- **4** Two stage, left hand

I Mounting Style
- **0** Ø7.2 (.283) thru
- **1** 1/4-20 thread
- **2** M6 x 1 thread

B Base Style
- **1** Standard
- **2** Standard with cable bracket
- **5** Integrated bumper
- **6** Integrated bumper with cable bracket

M Material
- **10** Steel
- **20** Stainless steel

Dimensions in millimeters (inch) unless otherwise stated

chanhvinh.com

R4 Rotary Latch

Light-Duty · Concealed · Single and two stage



- **Compatible with wide array of actuators**
- **EN 45545-3 E60 Compliant (Standard version only)**
- **Integrated bumper version for anti-vibration feature**

Single Stage - Top

(left hand actuation shown)

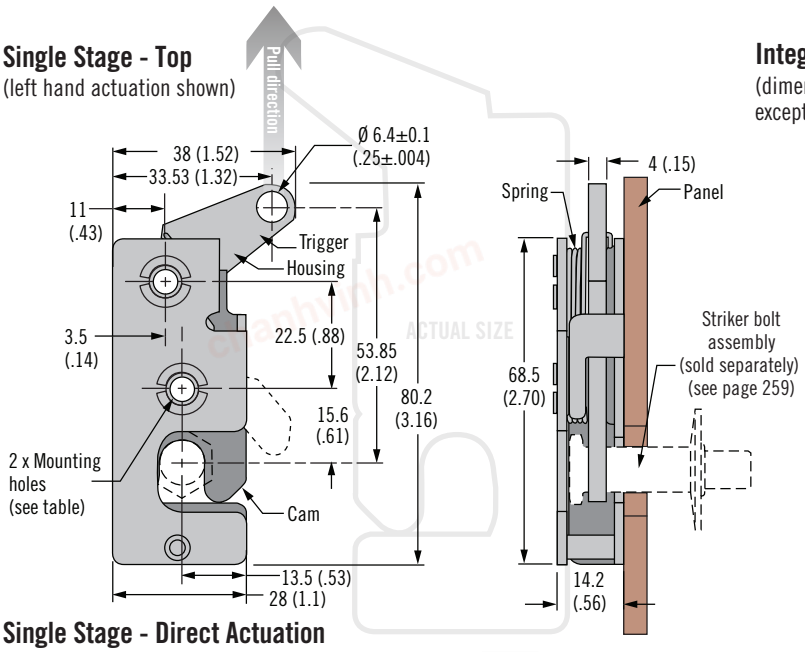

Integrated Bumper Version

(dimensions same as standard version except as shown)

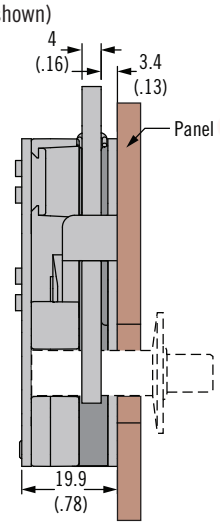

Single Stage - Direct Actuation

(left hand actuation shown)

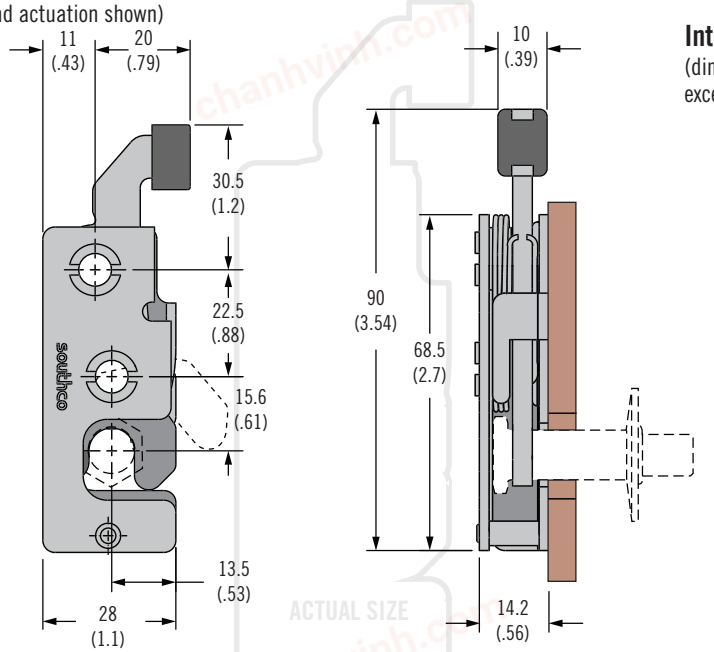

Integrated Bumper Version

(dimensions same as standard version except as shown)

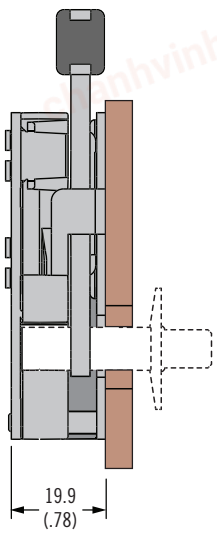

Material and Finish

Steel, zinc plated

Accessories

Striker bolts for standard version and integrated bumper version are different. See page 297 for both versions.

Cables and retainer clips
see page 322-323

Notes

Electromechanical rotary latch available see page 20

Part Number Selection

S Stage & Actuation
- **1** Single stage, right hand
- **2** Single stage, left hand
- **3** Two stage, right hand
- **4** Two stage, left hand

L Lever Type
- **6** Top
- **9** Direct Actuation

R4 - 10 - S I - L 0 B - M

I Mounting Style
- **0** Ø7.2 (.283) thru
- **1** 1/4-20 thread
- **2** M6 x 1 thread

B Base Style
- **1** Standard
- **5** Integrated bumper version

M Material
- **10** Steel
- **20** Stainless steel

chanhvinh.com



R4 Rotary Latch

Light-duty · Concealed · Dual Trigger · Single and two stage

- **Direct actuation, no cable or rod required**
- **Integrated bumper version for anti-vibration feature**
- **EN 45545-3 E60 Compliant (Standard version only)**

Material and Finish

Steel, zinc plated

Accessories

Striker bolts for standard version and integrated bumper version are different. See page 297 for both versions.

Trigger - use retaining clip R4-0-43922-2
Lever - use retaining clip R4-0-43922

Notes

Electromechanical rotary latch available see page 20

For electrical actuation option for bottom lever designs, see page 43

Single Stage - Dual Trigger - Bottom

(left hand actuation shown)

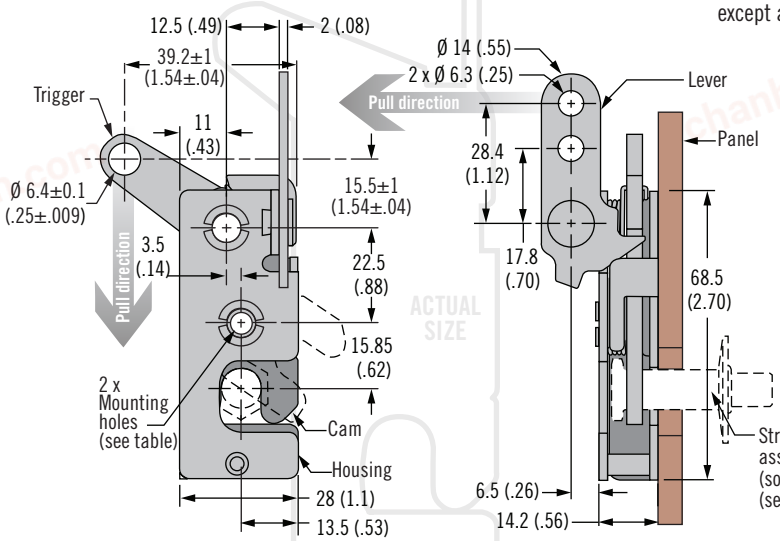

Integrated Bumper Version

(dimensions same as standard version except as shown)

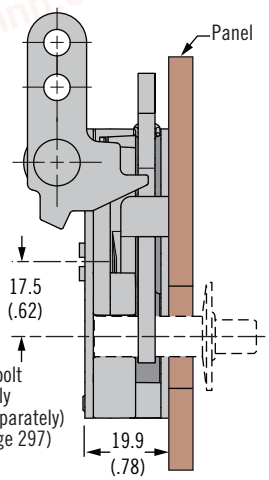

Single Stage - Dual Trigger - Top

(left hand actuation shown)

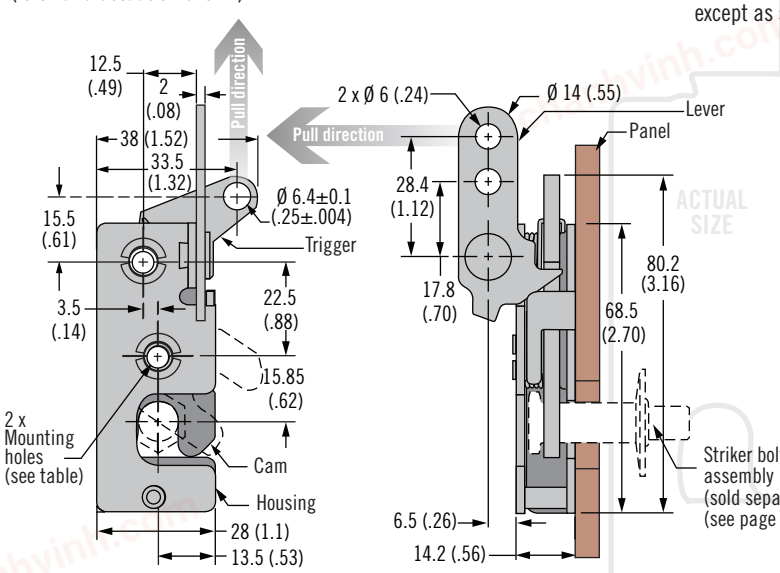

Integrated Bumper Version

(dimensions same as standard version except as shown)

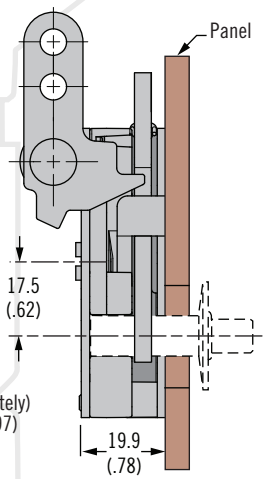

Part Number Selection

S Stage & Actuation
- 1 Single stage, right hand
- 2 Single stage, left hand
- 3 Two stage, right hand
- 4 Two stage, left hand

L Lever Type
- 7 Dual trigger, bottom
- 8 Dual trigger, top

R4 - 10 - S I - L 0 B - M

I Mounting Style
- 0 Ø7.2 (.283) thru
- 1 1/4-20 thread
- 2 M6 x 1 thread

B Base Style
- 1 Standard
- 5 Integrated bumper version

M Material
- 10 Steel

Dimensions in millimeters (inch) unless otherwise stated

chanhvinh.com

R4 Rotary Latch

Striker bolt · Light-duty · Installation



Striker Bolt Assembly - Standard
(sold separately)

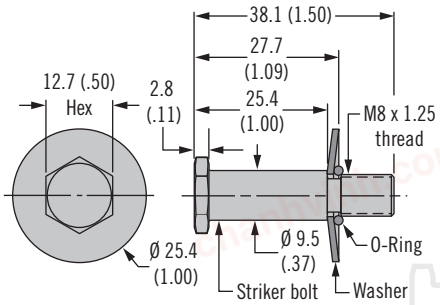

Striker Bolt Assembly - Integrated Bumper
(sold separately)

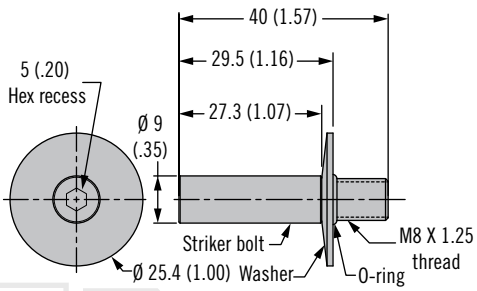

ACTUAL SIZE

Striker Bolt Standard	
Part Number	**Material**
R4-90-121-10	Steel, Zinc Plated
R4-90-121-20	Stainless Steel

Striker Bolt Integrated Bumper	
Part Number	**Material**
R4-90-124-10	Steel, Zinc Plated
R4-90-124-20	Stainless Steel

Striker 90° Mounting Bracket

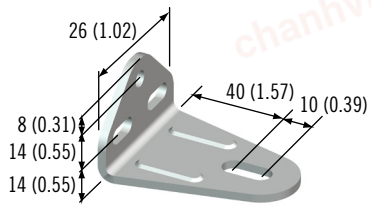

Striker Mounting Bracket	
Part Number	**Material**
R4-0-50114	Stainless Steel

Wire Form Strikers
(sold separately)

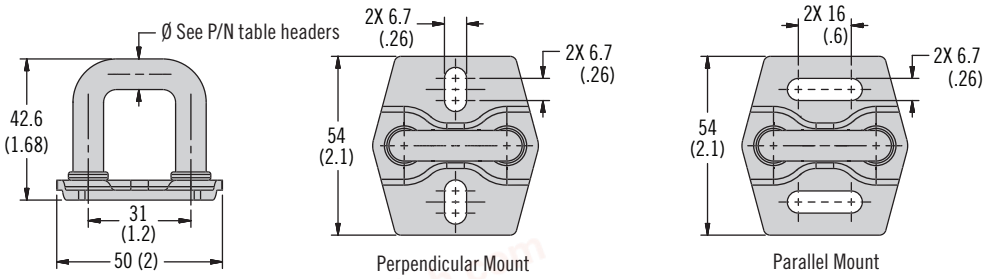

Wire Form Strikers - Standard Ø9.2 (.36)		
Part Number	**Mount**	**Material**
R4-90-101-10	Perpendicular	Steel, Zinc Plated
R4-90-101-15	Perpendicular	Steel, Black Zinc Nickel Plated
R4-90-101-20	Perpendicular	Stainless Steel
R4-90-101-77	Perpendicular	Steel, Zinc Nickel Plated
R4-90-102-10	Parallel	Steel, Zinc Plated
R4-90-102-15	Parallel	Steel, Black Zinc Nickel Plated
R4-90-102-20	Parallel	Stainless Steel
R4-90-102-77	Parallel	Steel, Zinc Nickel Plated

Wire Form Strikers -Integrated Bumper Ø9 (.35)		
Part Number	**Mount**	**Material**
R4-90-104-10	Perpendicular	Steel, Zinc Plated
R4-90-104-15	Perpendicular	Steel, Black Zinc Nickel Plated
R4-90-104-20	Perpendicular	Stainless Steel
R4-90-104-77	Perpendicular	Steel, Zinc Nickel Plated
R4-90-106-10	Parallel	Steel, Zinc Plated
R4-90-106-15	Parallel	Steel, Black Zinc Nickel Plated
R4-90-106-20	Parallel	Stainless Steel
R4-90-106-77	Parallel	Steel, Zinc Nickel Plated

- **Strikers for R4-10 series rotary latch**

Material and Finish

Steel, zinc plated Steel, zinc nickel plated, Steel, black zinc nickel plated, Stainless Steel, passivated

Operation

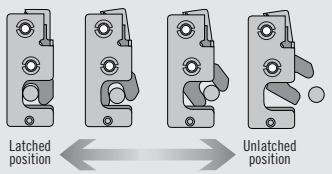

Part Number

See tables

chanhvinh.com



R4 Rotary Latch

Medium-Duty - Tool / Key Actuated

- **Tool or key operation**
- **High cycle life**
- **Meets tool access standard**

Material and Finish

Housing, trigger, actuator, pivot pin: Steel, zinc plated, or black zinc nickel plated

Accessories

Standard head style keys
see page 121
Heavy duty head style key
see page 297C
Striker options see page 297C

Notes

Electromechanical rotary latch available see page 20

Standard Head Styles

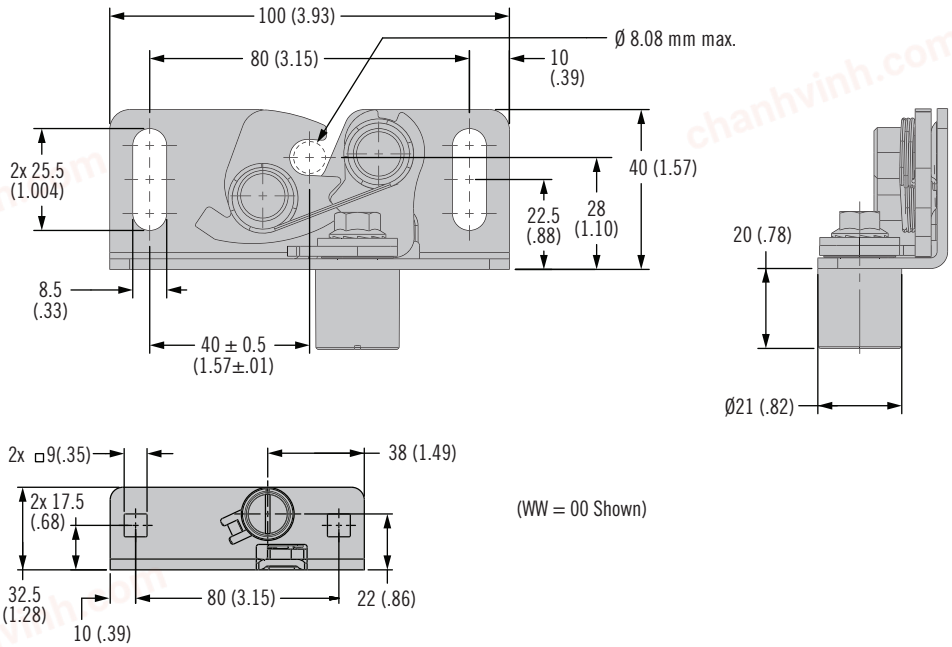

(WW = 00 Shown)

WW Standard Head Styles

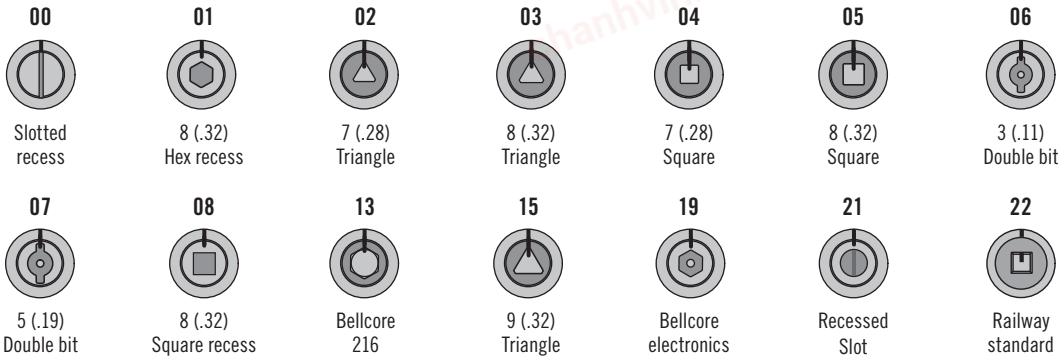

Part Number Selection

R4 - 15 - 10 - WW 0 - XX

WW Actuation Style

XX Latch finish

10	Zinc plated
15	Black zinc nickel plated

Dimensions in millimeters (inch) unless otherwise stated

southco®

chanhvinh.com

R4 Rotary Latch

Medium-Duty - Tool / Key Actuated

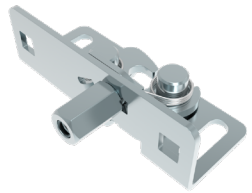

Heavy Duty Head Styles

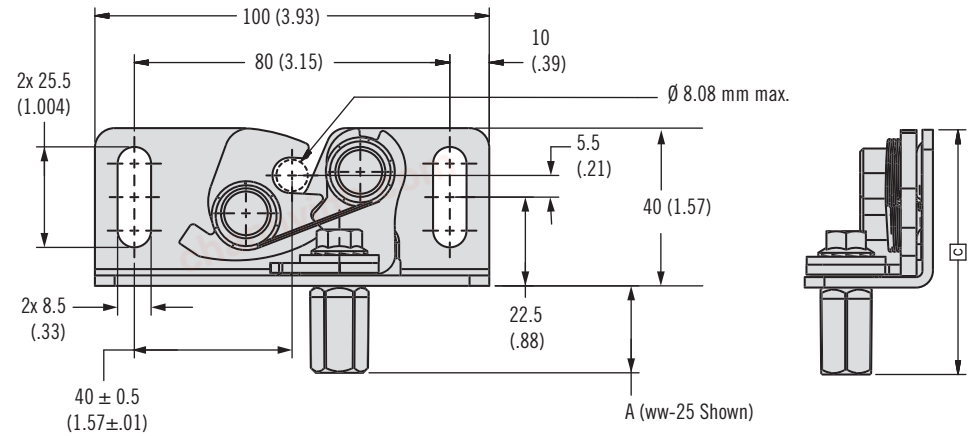

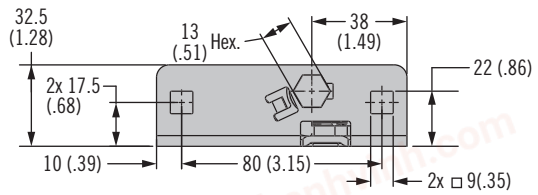

WW Heavy Duty Head Styles

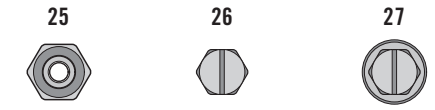

25	26	27
22 (.86) Hex M6 Thread	11 (.43) Hex slotted	6 (.23) Hex slotted flange

- **Tool or key operation**
- **High cycle life**
- **Meets tool access standard**

Material and Finish

Housing, trigger, actuator, pivot pin: Steel, zinc plated, or black zinc nickel plated

Accessories

Standard head style keys
see page 121
Heavy duty head style key
see page 297C
Striker options see page 297C

Notes

Electromechanical rotary latch available see page 20

Part Number Selection

R4 - 15 - 10 - WW 0 - XX

WW Actuation Style

XX Latch finish

10	Zinc plated
15	Black zinc nickel plated

chanhvinh.com



R4 Rotary Latch

Medium-Duty - Tool / Key Actuated

- **Tool or key operation**
- **High cycle life**
- **Meets tool access standard**

Material and Finish

Housing, trigger, actuator, pivot pin: Steel, zinc plated, or black zinc nickel plated

Accessories

Standard head style keys
see page 121

Notes

Electromechanical rotary latch available see page 20

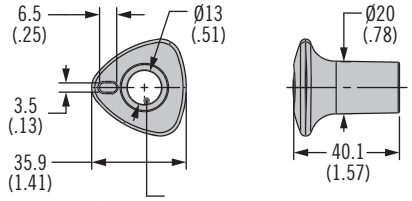

Key for Heavy Duty Head Styles		
Part Number	**Material**	**Finish**
R4-64-500-10	Zamak	Zinc plated
R4-64-500-15	Zamak	Black zinc nickel

Striker Bolt

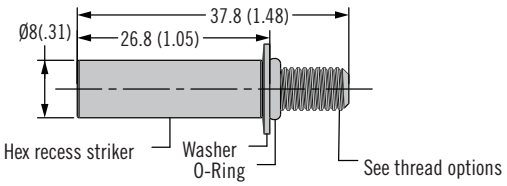

Part Number	Thread	Material	Finish
R4-90-514-10	1/4-28 UNF	Steel	Zinc plated
R4-90-524-10	M6 x 1	Steel	Zinc plated
R4-90-514-15	1/4-28 UNF	Steel	Black zinc nickel
R4-90-524-15	M6 x 1	Steel	Black zinc nickel

Wire Form Strikers

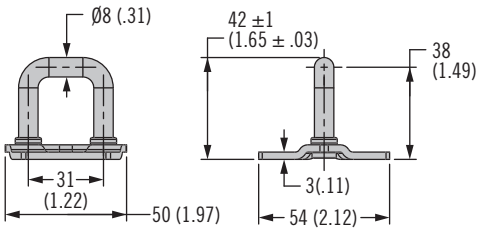

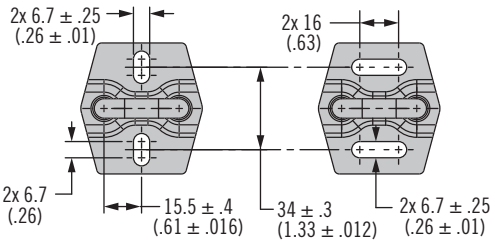

Part Number	Description	Material	Finish
R4-90-1504-10	U-Striker assembly, Perpendicular mount	Steel	Zinc plated
R4-90-1504-15	U-Striker assembly, Perpendicular mount	Steel	Black zinc nickel
R4-90-1506-10	U-Striker assembly, Parallel mount	Steel	Zinc plated
R4-90-1506-15	U-Striker assembly, Parallel mount	Steel	Black zinc nickel

Dimensions in millimeters (inch) unless otherwise stated

southco®

chanhvinh.com

R4 Rotary Latch

Medium-Duty – Concealed



- **Symmetrical design with cable mount simplifies installation**
- **Integrated bumper reduces noise and dampens vibration**
- **Front or side mount**

Material and Finish

Steel, zinc plate or zinc nickel plate

Accessories

Strikers see page 297 for 9mm diameter (integrated bumper) solutions.
Cables and retainer clips see pages 322-323

Latch with mount for cable without return assist spring

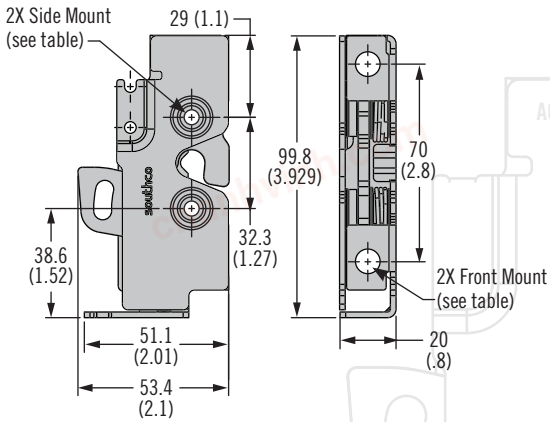

Panel preparation side mount

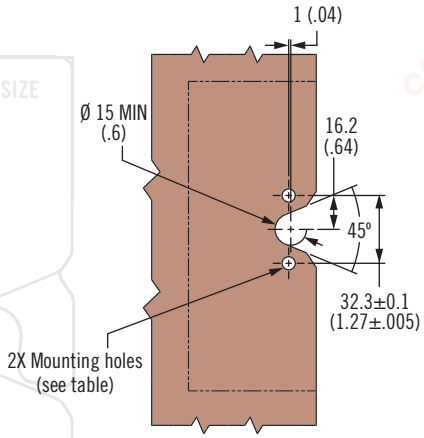

Latch with mount for cable with return assist spring

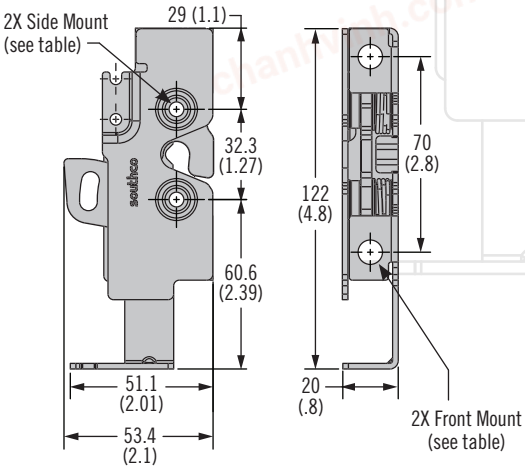

Panel preparation front mount

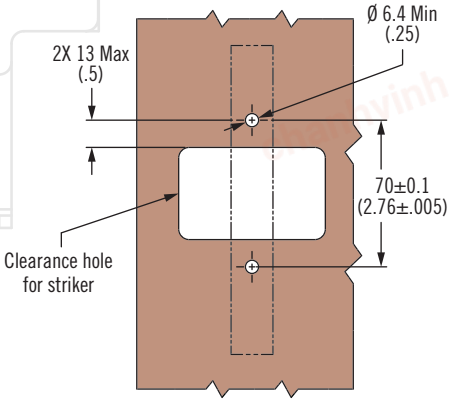

Part Number Selection

R4 - 25 - 2 [I] 0- 5 0 0 [B] - [MM]

[I] Mounting Style
- **0** Side mount Ø6.7(.283) thru
- **1** Side mount 1/4-20 thread
- **2** Side mount M6 x 1 thread
- **3** Front mount (M6) with side mount Ø6.7(.283) thru

[B] Base Style
- **2** Mount for cable with return spring assist, no bumper
- **3** Mount for cable without return spring assist, no bumper
- **6** Mount for cable with return spring assist, with bumper
- **7** Mount for cable without return spring assist, with bumper

[MM] Material
- **10** Steel, zinc plated
- **15** Steel, black zinc nickel

chanhvinh.com

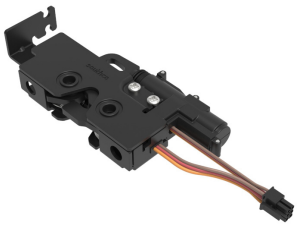

R4 Rotary Latch

Medium-Duty – Concealed – Electronic Operation and Door Sensing

- **Symmetrical design with cable mount simplifies installation**
- **Integrated bumper reduces noise and dampens vibration**
- **Front or side mount**
- **Sensor verifies door closure**
- **Sealed (IP67) 12VDC actuator enables remote electrical operation**
- **Latch releases reliably under high load**

Material and Finish

Steel, zinc plate or zinc nickel plate

Electronic specifications:

Operating voltage 12 VDC nominal
Operating current < 300mA
Temperature -40 to 80°C
Sealed (IP67 / Class 1 Division 2)

Accessories

Strikers see page 297 for 9mm diameter (integrated bumper) solutions
Cables and retainer clips see pages 322-323

Latch with door sensor

(with mount for cable with return assist spring shown)

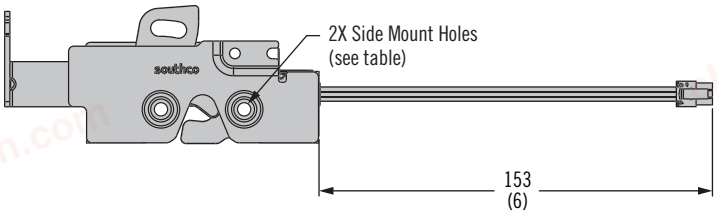

Switch Pin Out	
Pin	Function
1	No connect
2	No connect
3	No connect
4	Switch common
5	Door secure
6	Door open

Molex Micro-Fit 3.0 connector

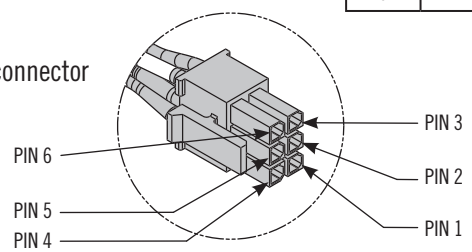

Latch with door sensor and sealed electronic actuator

(with mount for cable without return assist spring shown)

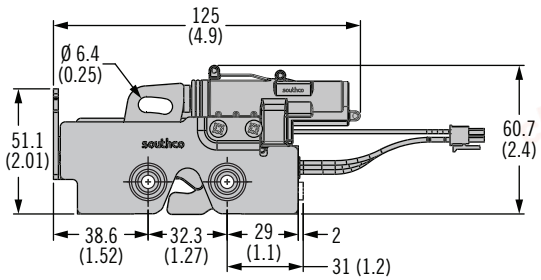

Switch with Actuator Pin Out	
Pin	Function
1	Ground
2	Power release
3	Power relock
4	Switch common
5	Door secure
6	Door open

Enable wireless operation with Southco's *BLUETOOTH*® Controller



Part Number Selection

R4 - 25 - 2 I S - 5 1 E B - MM

I Mounting Style
- 0 Side mount Ø6.7(.283) thru
- 1 Side mount 1/4-20 thread
- 2 Side mount M6 x 1 thread
- 3 Front mount (M6) with side mount Ø6.7(.283) thru

S Latch Release Options
- 0 Kick-out spring
- 1 Pull-to-open

E Electronic Actuation Options
- 0 None (latch with switch only)
- B 12VDC sealed (latch with switch and electronic actuator)
- 6 5VDC sealed (latch with switch and electronic actuator)

B Base Style
- 2 Mount for cable with return spring assist, no bumper
- 3 Mount for cable without return spring assist, no bumper
- 6 Mount for cable with return spring assist, with bumper
- 7 Mount for cable without return spring assist, with bumper

MM Material
- 10 Steel, zinc plated
- 15 Steel, black zinc nickel

Dimensions in millimeters (inch) unless otherwise stated

chanhvinh.com



R4 Rotary Latch

Medium-Duty · Concealed · Single and two stage

- **Compatible with wide array of actuators**
- **Hand actuation option**
- **EN 45545-3 E60 Compliant**

Material and Finish

Steel, zinc plated or 304 stainless steel, passivated

Accessories

Cables and retainer clips
see pages 322-323

Notes

Electromechanical rotary latch available see page 20

For panel preparation visit www.southco.com/R4

Part Number

See table

Order latch and striker separately

Remote Actuation (left hand, two stage version shown)

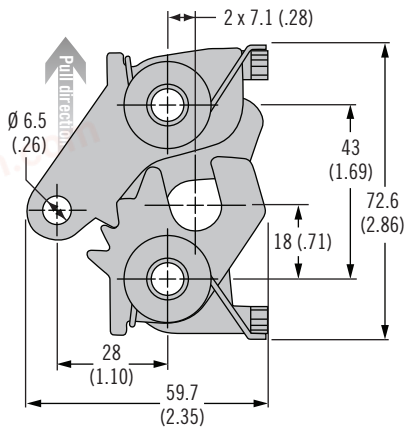

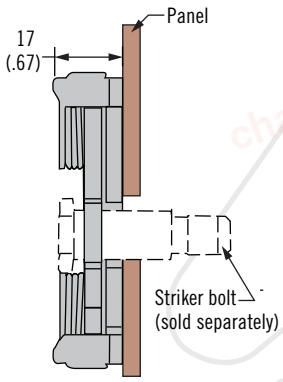

Striker Bolt (sold separately)

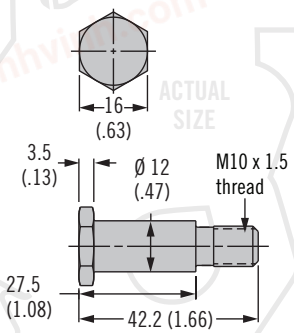

Striker Bolt Part Numbers	
Part Number	**Material**
R4-91-231-10	Steel
R4-91-231-20	Stainless Steel

Hand Actuation (left hand, single stage version shown)

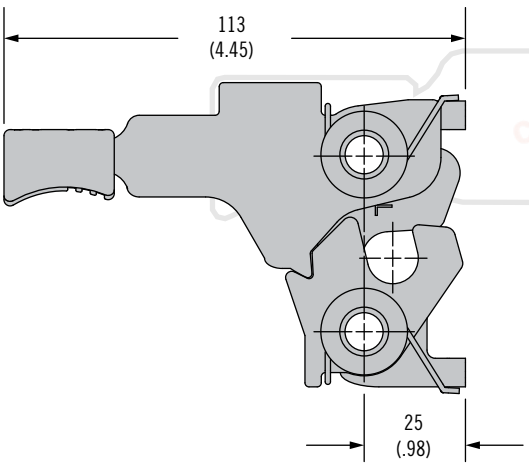

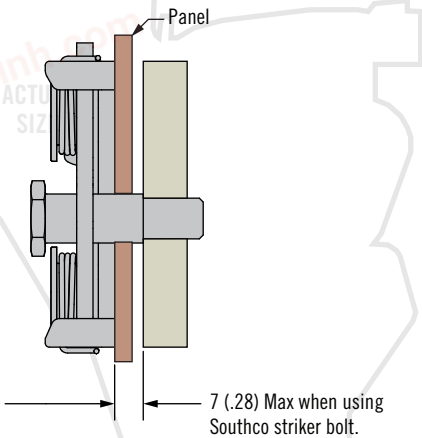

S Stage & Actuation
- **1** Single stage, right hand
- **2** Single stage, left hand
- **3** Two stage, right hand
- **4** Two stage, left hand

I Mounting Style
- **0** Ø 8.3 (.327) thru
- **1** 5/16-18 thread
- **2** M8 x 1.25 thread

R4 - 20 - S I - L 01 - M

M Material
- **10** Steel
- **20** Stainless steel

L Lever Type
- **4** Hand actuation (steel only)
- **5** Bottom

Dimensions in millimeters (inch) unless otherwise stated

chanhvinh.com

R4 Rotary Latch

Medium · Concealed · Debris Resistant · Two stage



Two Stage (Left hand actuation shown)

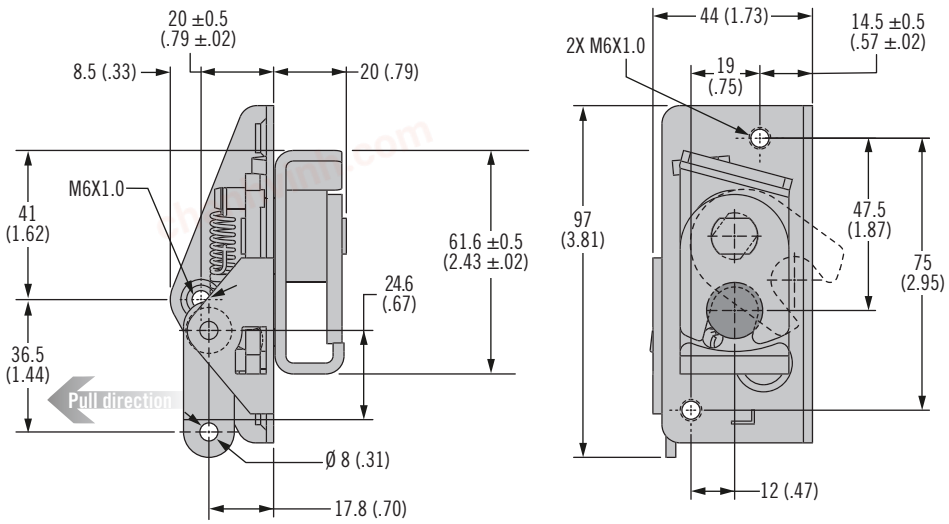

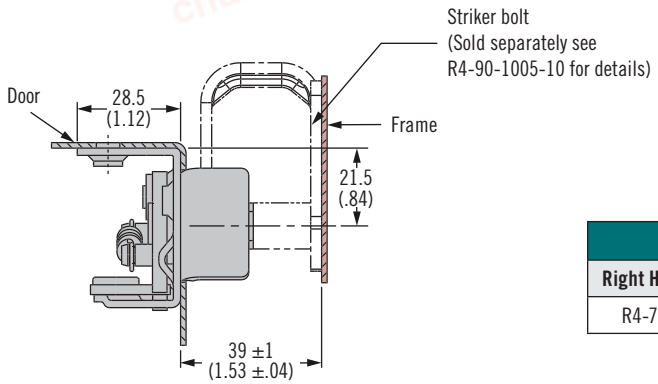

Part Number	
Right Hand Actuation	Left Hand Actuation
R4-75-32-201-10	R4-75-42-201-10

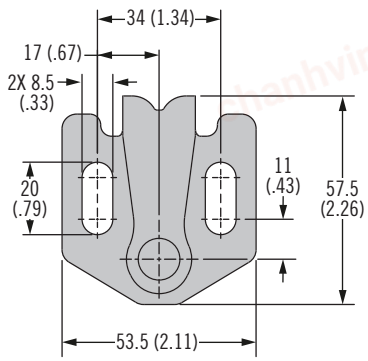

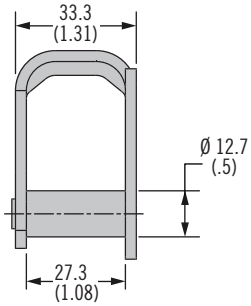

Protected Striker	
Part Number	Material
R4-90-1005-10	Steel

- **Compatible with a wide array of actuators**
- **Debris resistant concealed mounting**
- **Two stage latching**

Material and Finish

Steel, zinc plated

Accessories

Retainer clip AC-9BX-20-34
see page 323

Notes

Electromechanical rotary latch
available see page 20

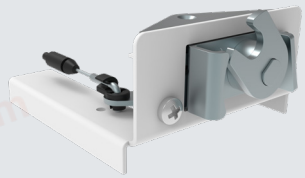

Part Number

See table

Order latch and striker separately

chanhvinh.com



R4 Rotary Latch

Heavy-Duty · Concealed · Single and two stage

- **Compatible with wide array of actuators**
- **FMVSS 206 capable options**
- **EN 45545-3 E60 compliant (Standard version only)**
- **Integrated bumper version for anti-vibration feature**

Material and Finish

Steel, zinc plated
Steel, zinc nickel plated (black and clear)
Stainless steel, passivated

Accessories

Cables and retainer clips see pages 322-323

Striker options see page 301

Notes

R4-38-101-10 support plate sold separately for FMVSS 206 capability

Mounts opposite of latch housing.



Perpendicular (left hand actuation shown)

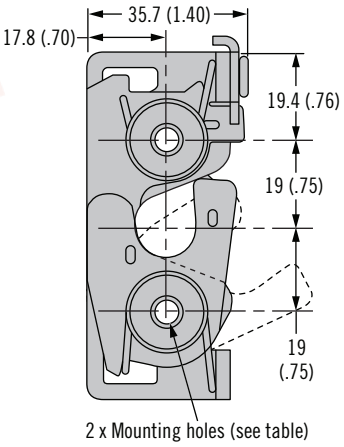

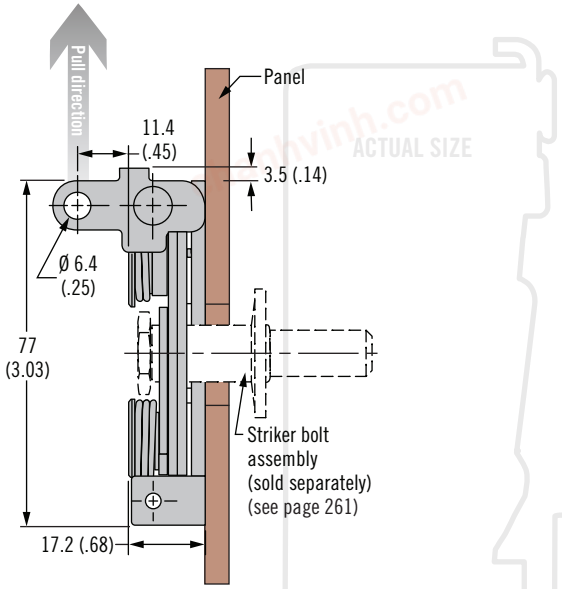

2-Point Actuator (left hand actuation shown)

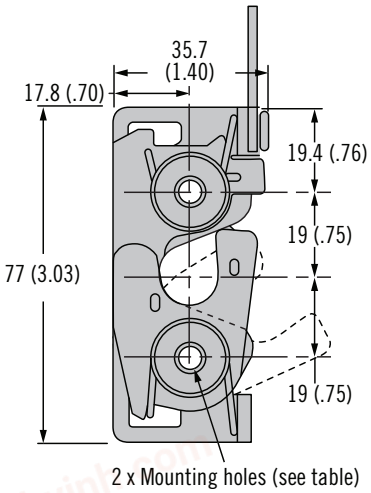

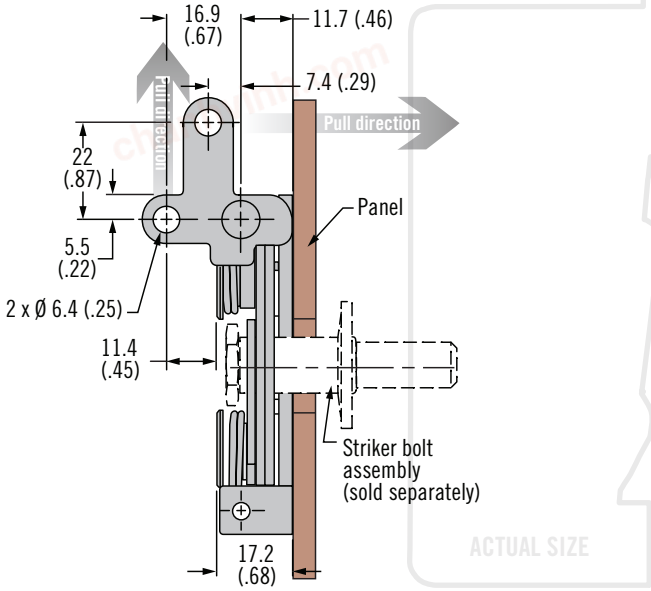

Part Number Selection

R4 - 30 - S I - L 0 B - M

S Stage & Actuation
1 Single stage, right hand
2 Single stage, left hand
3 Two stage, right hand
4 Two stage, left hand

I Mounting Style
0 Ø6.7 (.283) thru
1 1/4-20 thread
2 M6 x 1 thread

1 Base Style
1 Standard
5 Integrated bumper

L Lever Type
1 Perpendicular
3 Two point
7 Dual Lever, Bottom & Perpendicular

M Material
10 Steel, zinc plated
15 Steel, black zinc nickel
77 Steel, clear zinc nickel
20 Stainless steel

Dimensions in millimeters (inch) unless otherwise stated

southco®

chanhvinh.com

R4 Rotary Latch

Heavy-Duty · Concealed · Single and Two stage

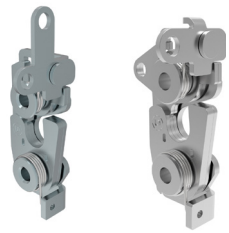

Dual Trigger (left hand actuation shown)

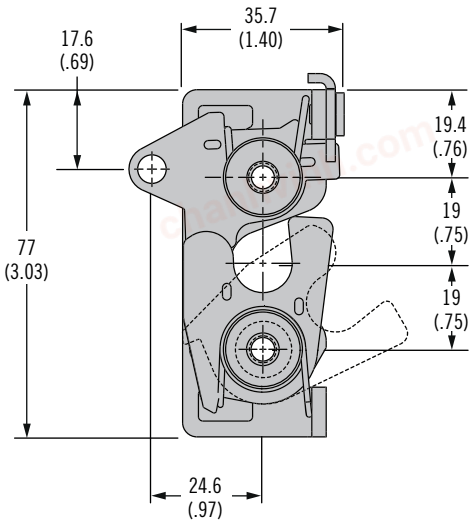

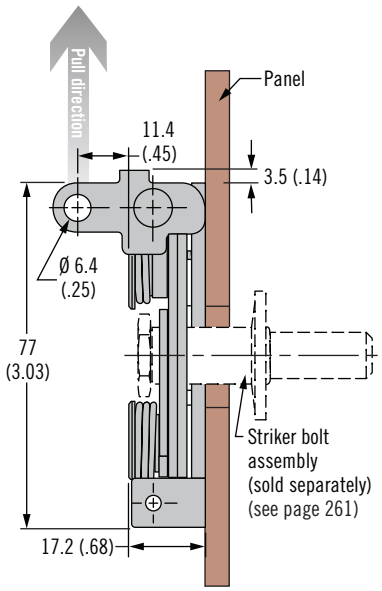

Panel Preparation

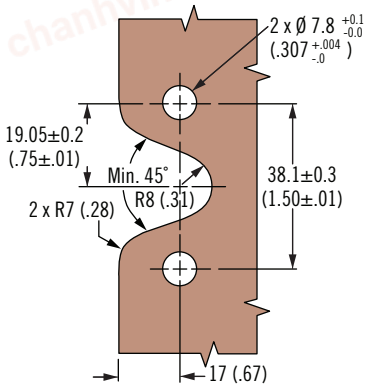

Strikers (sold separately)

Striker Bolt Part Number	
Part Number	**Material**
R4-90-321-10	Steel, Hex Head
R4-90-321-20	Stainless Steel, Hex Head
R4-90-324-10	Steel, Recessed Hex
R4-90-324-20	Stainless Steel, Recessed Hex

Protected Striker	
Part Number	**Material**
R4-90-1005-10	Steel
*Not FMVSS 206 Capable	

Hex Head

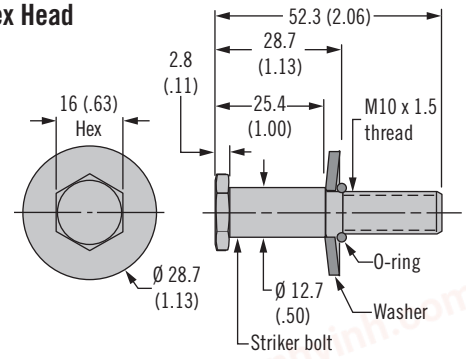

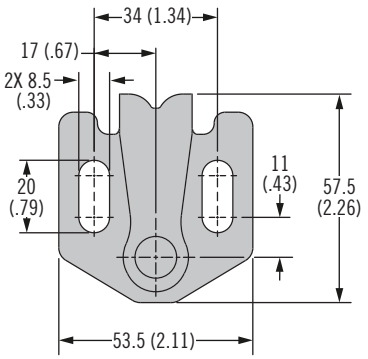

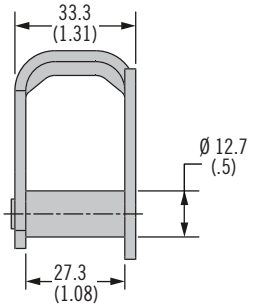

Recessed Head

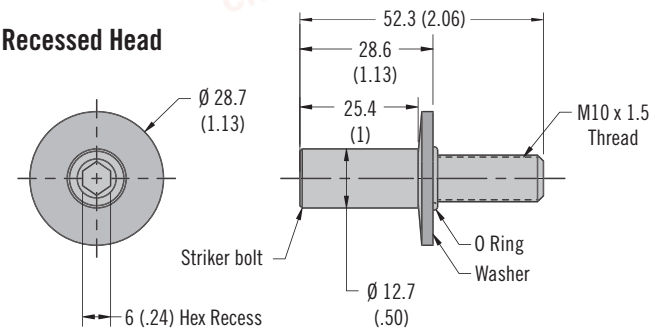

ACTUAL SIZE

Dimensions in millimeters (inch) unless otherwise stated

chanhvinh.com



R4 Rotary Latch

Heavy-Duty · Concealed · Single and two stage

- **Compatible with wide array of actuators**
- **FMVSS 206 capable options**
- **EN 45545-3 E60 compliant (Standard version only)**
- **Integrated bumper version for anti-vibration feature**

Material and Finish

Steel, zinc plated
Steel, zinc nickel plated (black and clear)
Stainless steel, passivated

Accessories

Cables and retainer clips see pages 322-323

Striker options see page 301

Notes

R4-38-101-10 support plate sold separately for FMVSS 206 capability

Mounts opposite of latch housing.



Bottom

(left hand actuation shown)

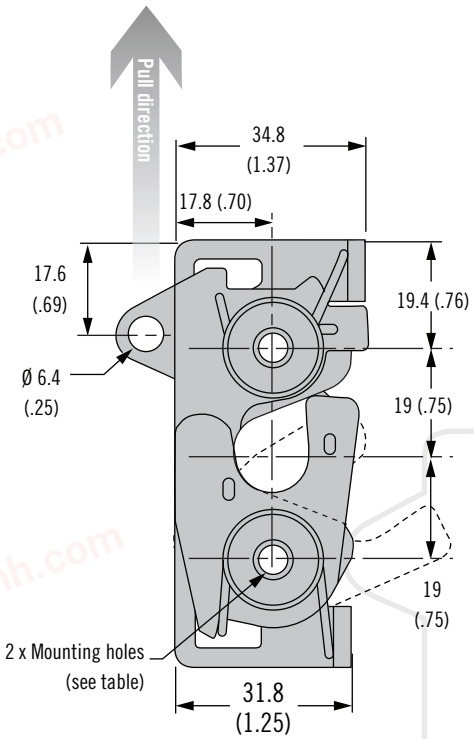

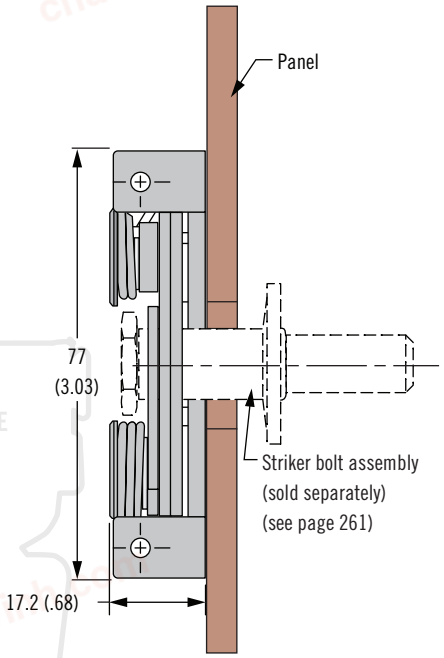

ACTUAL SIZE

Part Number Selection

S Stage & Actuation
1 Single stage, right hand
2 Single stage, left hand
3 Two stage, right hand
4 Two stage, left hand

R4 - 30 - S I - 50 B - M

I Mounting Style
0 Ø6.7 (.283) thru
1 1/4-20 thread
2 M6 x 1 thread

1 Base Style
1 Standard
2 Standard with cable bracket for spring
3 Standard with cable bracket no spring
5 Integrated bumper
6 Integrated bumper with cable bracket for spring
7 Integrated bumper with cable bracket no spring

M Material
10 Steel, zinc plated
15 Steel, black zinc nickel plated
77 Steel, clear zinc nickel
20 Stainless steel

Dimensions in millimeters (inch) unless otherwise stated

chanhvinh.com

Bottom with cable bracket

(left hand actuation shown)

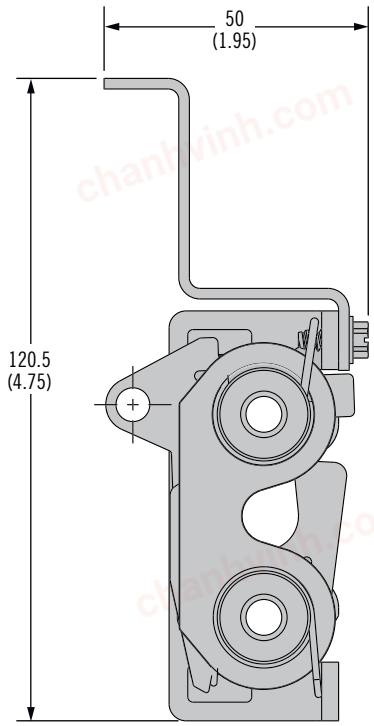

(with bumper shown)

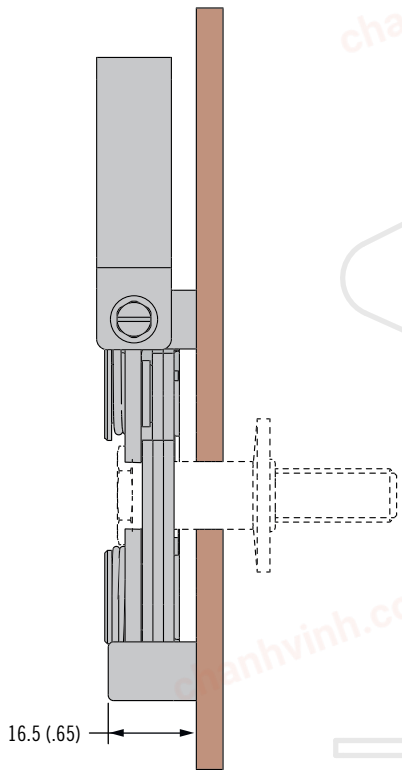

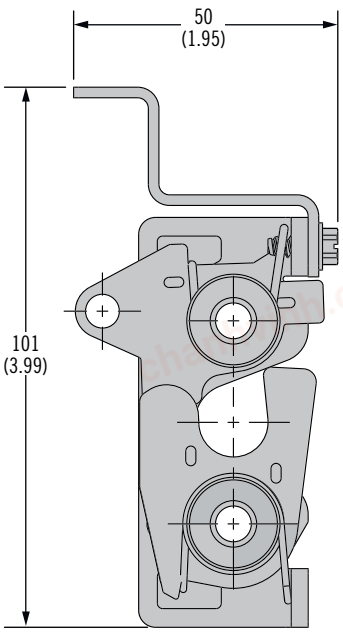

(without bumper shown)

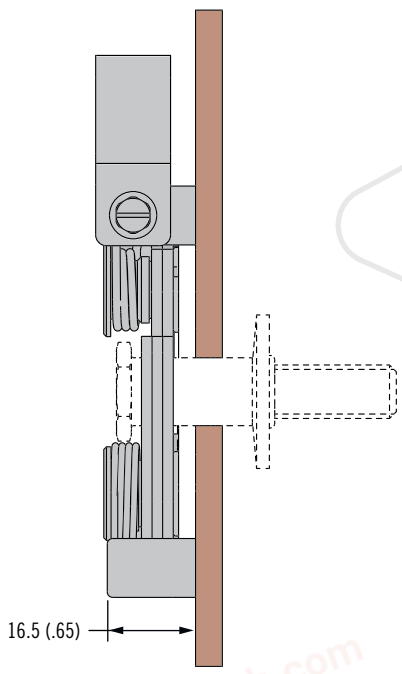

ACTUAL SIZE

ACTUAL SIZE

chanhvinh.com



R4 Rotary Latch

Heavy-duty · Two stage

- **Single or multi-point latch capability**
- **Compatible with a wide array of actuators**
- **FMVSS 206 capable**
- **EN 45545-3 E60 compliant**

Material and Finish

Steel, zinc plated

Accessories

Cables and retainer clips see pages 322-323

Notes

Electromechanical rotary latches available see page 20

For panel preparation visit www.southco.com/R4

Striker Bolt Assembly (sold separately): R4-90-441-10

Single Trigger, Perpendicular Actuation

(left hand actuation shown)

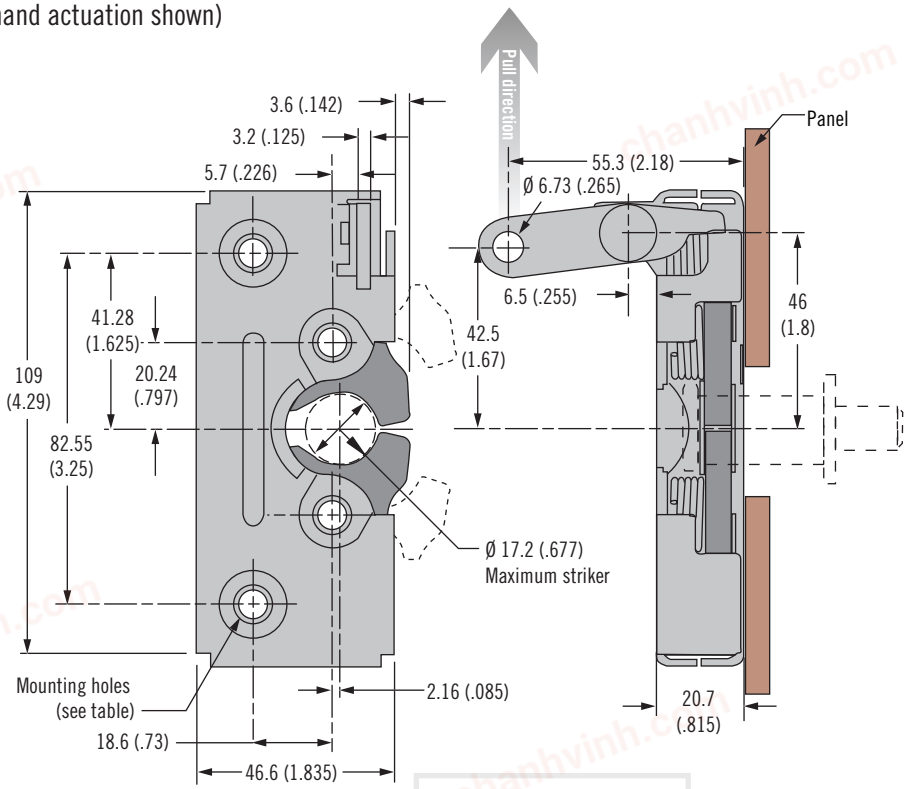

ACTUAL SIZE

Operation

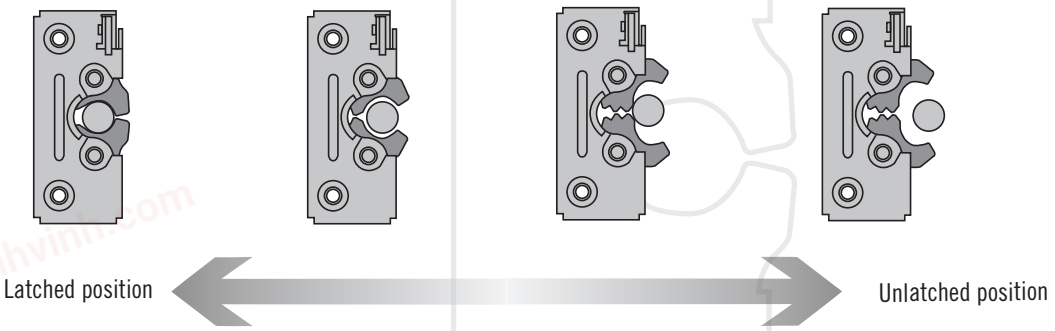

Dimensions in millimeters (inch) unless otherwise stated

chanhvinh.com

chanhvinh.com

Part Number Selection

R4 - 50 - S I - 101 - 10

S Stage & Actuation
1 Single stage, right hand
2 Single stage, left hand
3 Two stage, right hand
4 Two stage, left hand

I Mounting Style
0 7.2mm thru hole
1 1/4-20 thread
2 M6 thread

Striker Bolt Assembly (sold separately)
R4-90-441-10 Steel, Zinc Plated

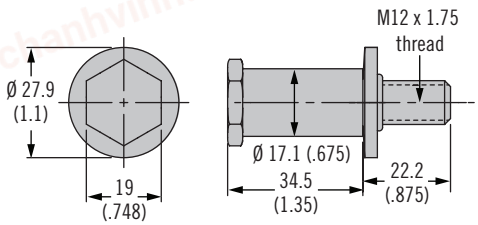

chanhvinh.com



R4 Rotary Latch

Heavy-Duty – Concealed – Door Sensing

- **High strength door retention (FMVSS 206)**
- **Sensor verifies door closure**
- **Exceptional cycle life**

Material and Finish:
Latch: steel, zinc plate or zinc nickel plate

Micro-switch Specifications:
Rating: 3 A Maximum at 12VDC
Sealed - IP67
Temperature -40 to 80°C

Accessories
Strikers see page 291
Bluetooth controllers see page 50
Cables and retainer clips see pages 322-323

Latch with door sensor
(right hand actuation shown)

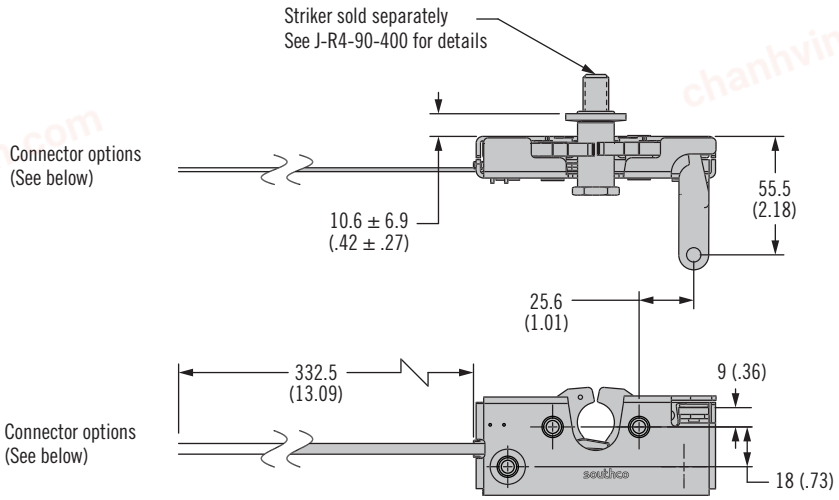

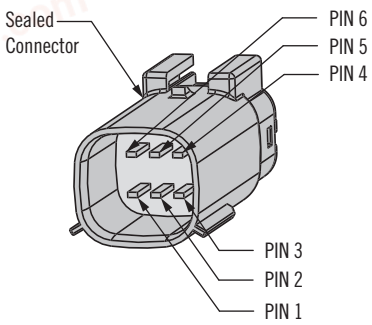

Switch Pin Out	
Pin	**Function**
1	No connect
2	No connect
3	No connect
4	Switch common
5	Door secure
6	Door unsecure

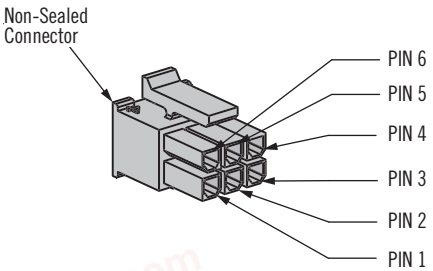



Enable wireless operation with Southco's *BLUETOOTH*® Controller

Part Number Selection

R4 - 50 - S I - 1 E 1 - 10

I Stage & Actuation
1 Single stage right hand latch
2 Single stage left hand latch
3 Two stage right hand latch
4 Two stage left hand latch

I Mounting Style
0 7.2 mm thru hole
1 1/4-20 threaded
2 M6 threaded

E Door Sensor Connector
1 Non-sealed connector
2 Stripped and tinned wires
3 Sealed connector

Dimensions in millimeters (inch) unless otherwise stated

southco®

chanhvinh.com

R4 Rotary Latch

Heavy-Duty – Concealed – Electronic Operation and Door Sensing



Latch with door sensor, 12V sealed electronic actuator

(right hand actuation shown)

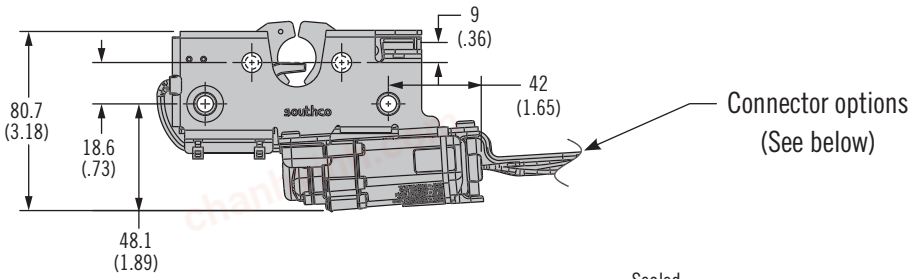

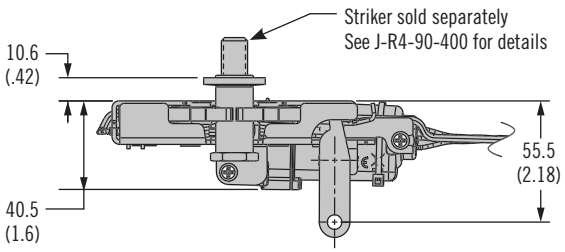

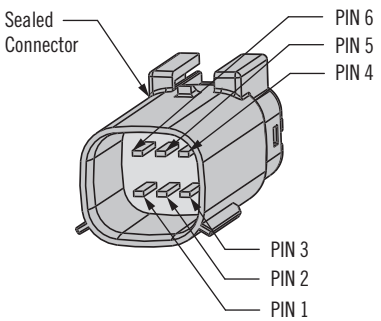

Connector Pinout		
Pin	**Wire Color**	**Function**
1	Brown	Ground
2	Red	Power release
3	Orange	Power relock
4	Black	Switch common
5	Blue	Door secure
6	Grey	Door open

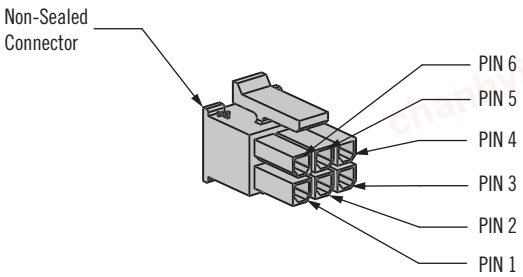



Enable wireless operation with
Southco's *BLUETOOTH*® Controller

Part Number Selection

R4 - 50 - S I - 1 E 1 - 10

I **Stage & Actuation**
- **3** Two stage right hand
- **4** Two stage left hand

I **Mounting Style**
- **0** 7.2 mm thru hole
- **1** 1/4-20 threaded
- **2** M6 threaded

E **Electronics**
- **EA** With switch and actuator, non-sealed connector
- **EB** With switch and actuator, stripped & tinned wires
- **EC** With switch and actuator, sealed connector

- **High strength door retention (FMVSS 206)**
- **Sensor verifies door closure**
- **Exceptional cycle life**
- **Quick release**
- **Sealed actuator**
- **Releases reliably under high load**

Material and Finish

Latch: steel, zinc plate or zinc nickel plate
Actuator: PC/ABS, acetal, silicone, buna seals

Electronic specifications:

Operating voltage 12 VDC nominal
Operating current < 600mA
Temperature -40 to 80°C
Sealed (IP65)

Accessories

Striker Bolt Assembly
(sold separately) R4-90-441-10
Cables and retainer clips
see pages 322-323

chanhvinh.com



R4 Rotary Latch

Heavy-duty · Two stage · Dual trigger

- **Independent interior and exterior actuation**
- **Compatible with a wide array of actuators**
- **FMVSS 206 capable**
- **EN 45545-3 E60 compliant**

Material and Finish

Steel, zinc plated

Accessories

Cables and retainer clips
see pages 322-323

For panel preparation visit
www.southco.com/R4

Striker Bolt Assembly
(sold separately): R4-90-441-10

Additional top triggers available
see page 305E

Dual Trigger, Hand Actuation & Bottom Cable/Rod Release
(left hand actuation shown)

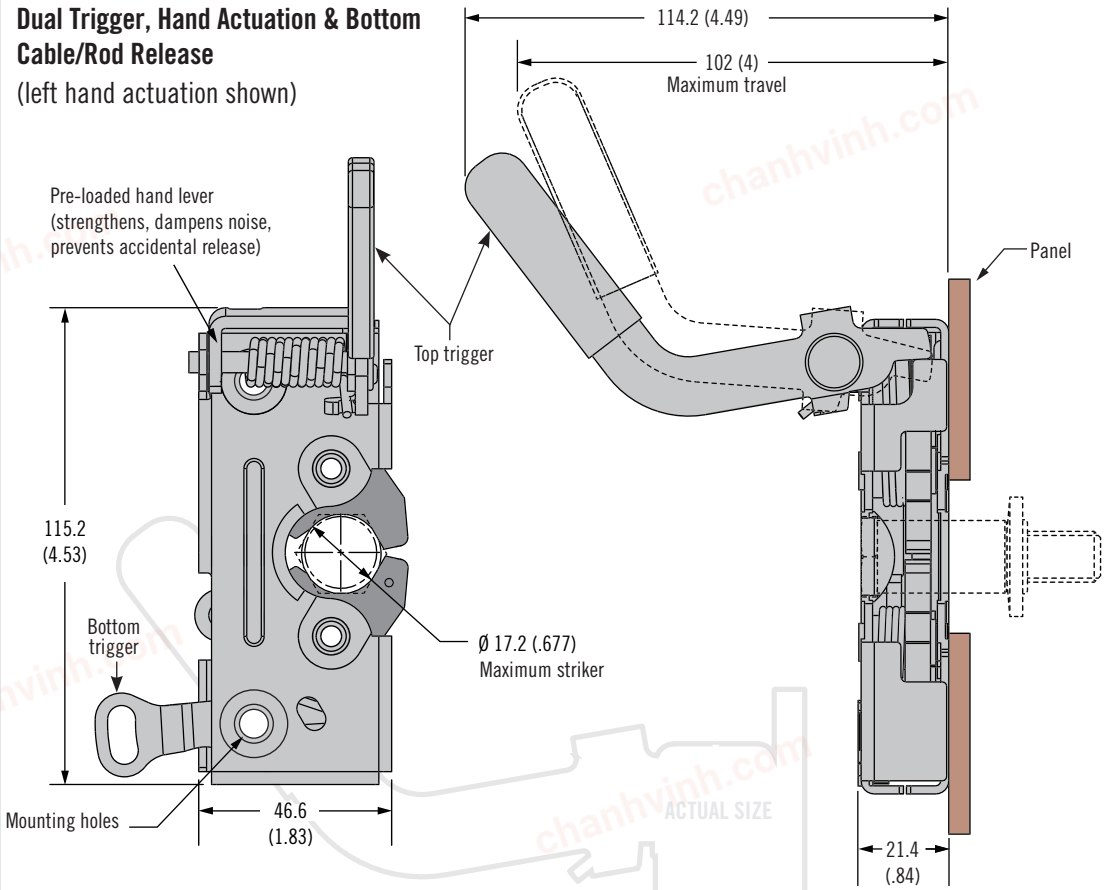

Part Number Selection

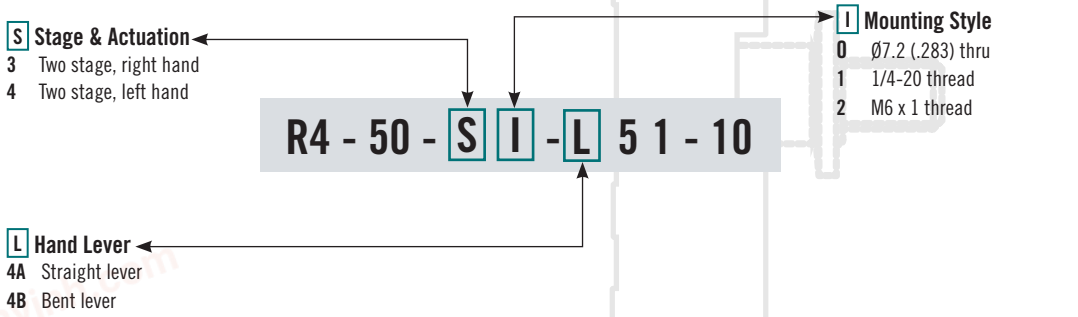

Striker Bolt Assembly (sold separately)	
Part Number	**Material**
R4-90-441-10	Steel, Zinc Plated

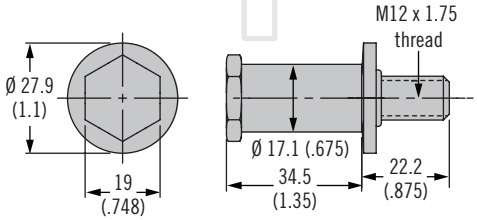

Dimensions in millimeters (inch) unless otherwise stated

chanhvinh.com

chanhvinh.com

R4 Rotary Latch

Heavy-duty · Two stage · Dual trigger



Dual Trigger, Hand Actuation & Bottom Push Release

(left hand actuation shown)

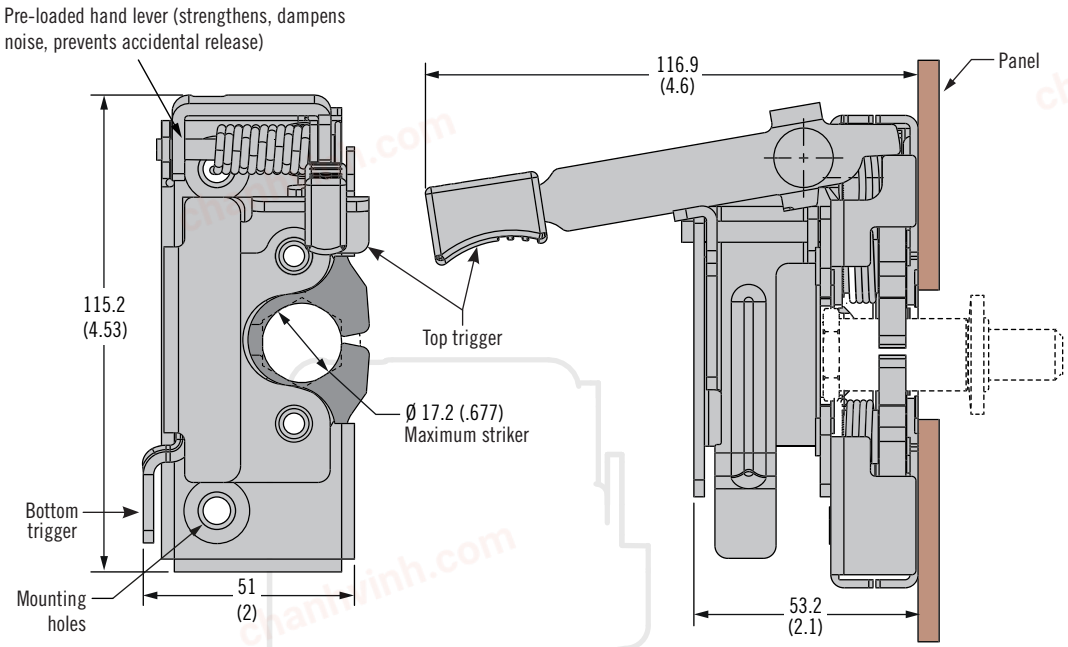

ACTUAL SIZE

- **Independent interior and exterior actuation**
- **Compatible with a wide array of actuators**
- **FMVSS 206 capable**
- **EN 45545-3 E60 compliant**

Material and Finish

Steel, zinc plated

Accessories

Cables and retainer clips
see pages 322-323

For panel preparation visit
www.southco.com/R4

Striker Bolt Assembly
(sold separately): R4-90-441-10

Additional top triggers available
see page 305E

Part Number Selection

S Stage & Actuation
- **3** Two stage, right hand
- **4** Two stage, left hand

I Mounting Style
- **0** Ø7.2 (.283) thru
- **1** 1/4-20 thread
- **2** M6 x 1 thread

R4 - 50 - S I - L 8 1 - 10

L Hand Lever
- **4A** Straight lever
- **4B** Bent lever

Striker Bolt Assembly (sold separately)

Part Number	Material
R4-90-441-10	Steel, Zinc Plated

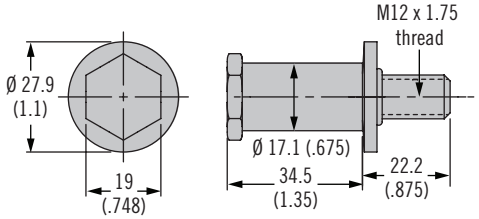

chanhvinh.com

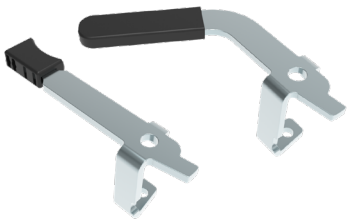

R4 Rotary Latch

Top Trigger Options

Notes

For use with R4-50 Heavy Duty Two Stage Dual Trigger Latches only

Top levers for hand-actuated R4-50 dual trigger latches

L Hand Lever

Straight Lever (4A)

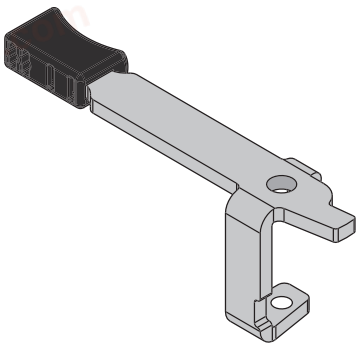

Bent Lever (4B)

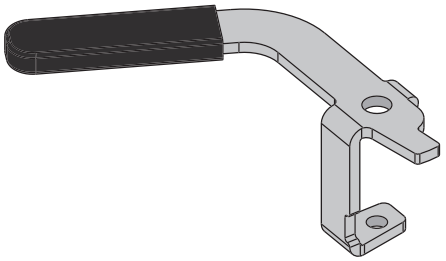

chanhvinh.com



R4-81 Rotary Paddle Latch

Pull-to-open

- **Rear mount installation**
- **Direct actuation, no cable or rod required**
- **Single or two stage latching**
- **Integrated bumper option**
- **Environmentally sealed**

Material and Finish

Housing: Glass-filled nylon, black

Paddle: Zinc alloy, black powder coated or chrome plated

Installation Notes

Maximum tightening torque on supplied mounting nuts 3 N·m (27 in·lbf)

Accessories

Striker bolt see page 297

Notes

For lock core selection and a complete overview of the *SOUTHCO*® Key-Choice System see page 190

Part Number

See table

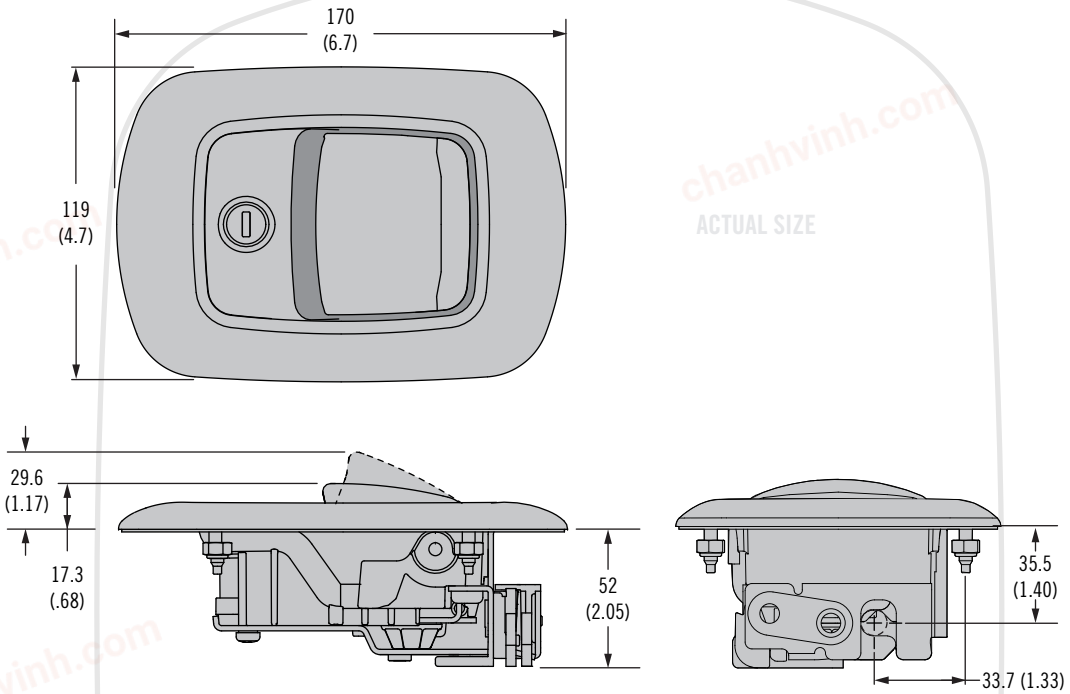

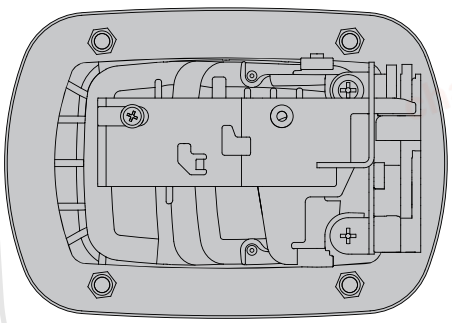

Panel Preparation

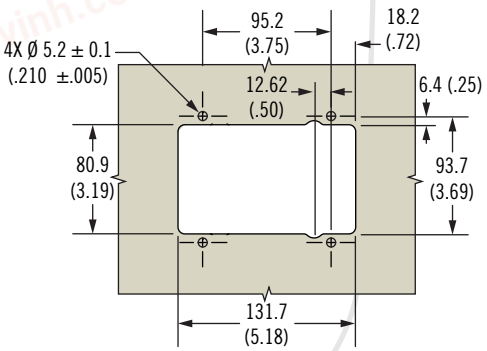

Maximum Door Thickness - 8 (.32)

S Stage & Bumper
- **2** Single Stage
- **4** Two Stage
- **6** Single Stage with Integrated Bumper
- **8** Two Stage with Integrated Bumper

PP Paddle Finish
- **30** Chrome, polished
- **50** Black powder coated

R4 - 81 - S L 1 - PP - KC

L Locking Options
- **1** Reversible Key (No Keys - R001)
- **2** Reversible Key (2 Keys included - R001)
- **3** Reversible Key (2 keys included - Keyed differently)
- **4** Standard Key (No keys - CH751)
- **5** Standard Key (2 Keys included - CH751)
- **6** Standard Key (2 keys included - Keyed differently)
- **9** No Lock Plug installed (See notes for more information)

KC Key Codes

(Omit for Locking Options 1, 2, 4, 5 and 9)
- *__KD10__ Keyed Differently (Only used if L =3 or 6)
- *__MK10__ Master Keyed Differently (Only used if L =6)

*Supplied in multiples of 10 with 10 different key codes.

Dimensions in millimeters (inch) unless otherwise stated

chanhvinh.com

R4-82 Rotary Paddle Latch

Pull-to-open



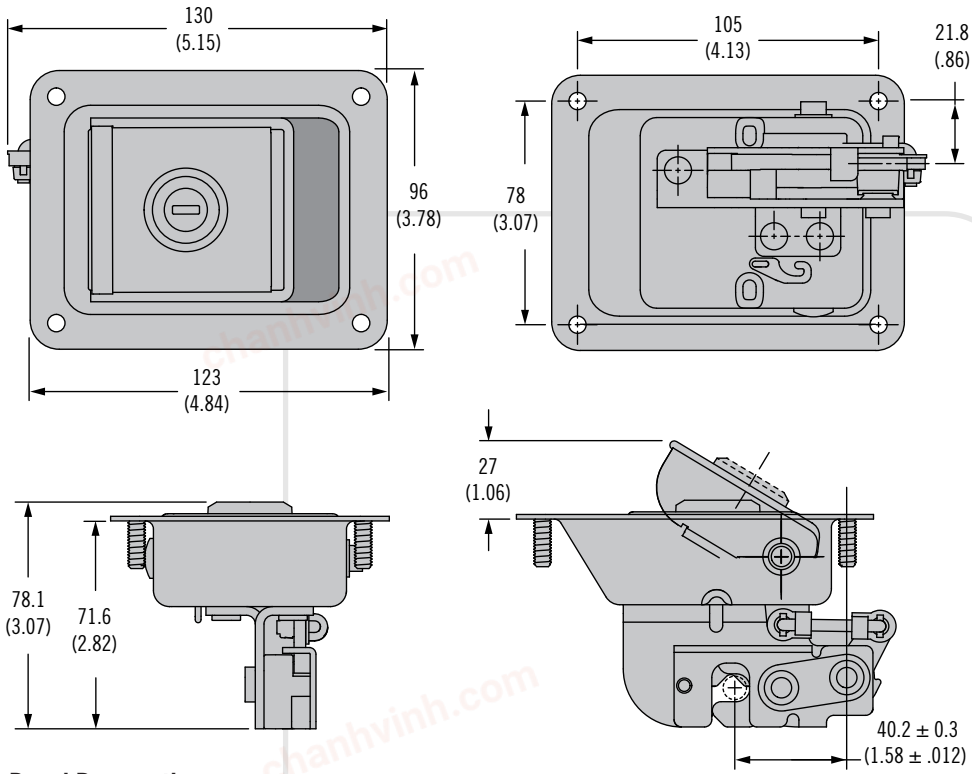

- **Direct actuation, no cable or rod required**
- **Single or two stage latching**
- **Integrated bumper**
- **Thru hole or stud mounting options**

Material and Finish

Cup and handle: Steel, zinc plated or black powder coat

Lock slide, latch frame, pawl, trigger: Steel, zinc plated

Installation Notes

Thru hole: M5 or #8 screws recommended

Studs: Use M6 mounting nuts (max tightening torque 7 N·m (62 in·lbf))

Studs: Max panel thickness 10 (.39)

Accessories

Striker bolt see page 297

Notes

For lock core selection and a complete overview of the *SOUTHCO*® Key-Choice System see page 190

Panel Preparation

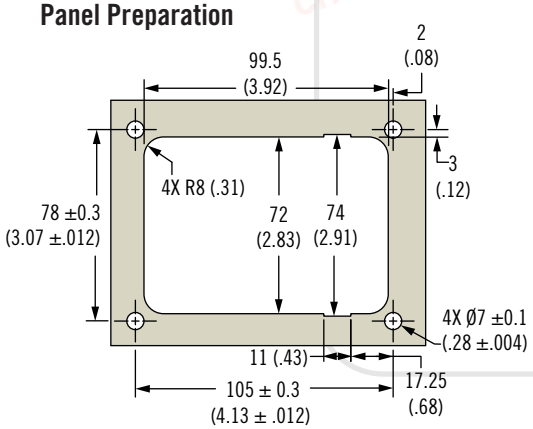

ACTUAL SIZE

Part Number Selection

See table

S **Stage**
- **6** Single Stage with Integrated Bumper
- **8** Two Stage with Integrated Bumper

H **Housing**
- **2** Rivet Thru Hole 5.2 (.20)
- **4** Press-in Studs

PP **Finish**
- **10** Zinc plated
- **50** Black powder coated

R4 - 82 - S L H - PP - KC

L **Locking Options**
- **1** Reversible Key (No Keys - R001)
- **2** Reversible Key (2 Keys included - R001)
- **3** Reversible Key (Keyed differently - 2 keys included)
- **4** Standard Key (No keys - CH751)
- **5** Standard Key (2 Keys included - CH751)
- **6** Standard Key (Keyed differently - 2 keys included)
- **7** Reversible Key (2 keys included - 14603)
- **9** No Lock Plug installed (See notes for more information)

KC **Key Codes**

(Omit for Locking Options 1, 2, 4, 5 and 9)
- *__KD10__ Keyed Differently (Only used if L =3 or 6)
- *__MK10__ Master Keyed Differently (Only used if L =6)

*Supplied in multiples of 10 with 10 different key codes.