chanhvinh.com



PT Tubular Key Cam Locks

Fixed core

- 7-pin tumbler lock security
- Keyed alike, keyed differently or custom key code options
- Cams sold separately

Material and Finish

Zinc alloy, chrome plated

Performance Details

Average ultimate load on cam: 645 N (145 lbf)

Accessories

See page 169

Installation Notes

1. Install mounting nut and tighten to 5 N•m (44 in•lbf) Max.
2. Install cam to assembly. Properly orient for rotation and grip.
3. Install lockwasher and cam mounting nut. Tighten to 2 N•m (18 in•lbf).

Non-Sealed Pin Tumbler

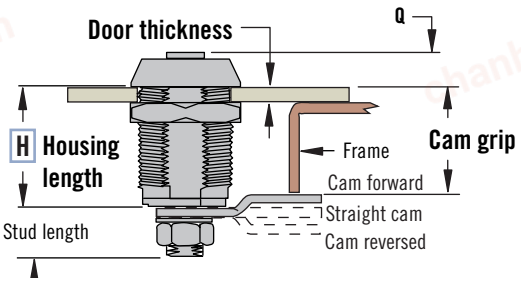

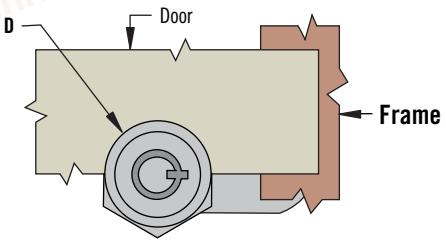

Series	Non-Sealed Pin Tumbler	
	Q	D
Standard	6.8 (.27)	Ø 22 (.87)

Series	Installation		
	X	Y	Z
Standard	16.26 - 16.36 (.640 - .644)	Ø 19±0.2 (.75±.007)	19±2 (.75±.08)

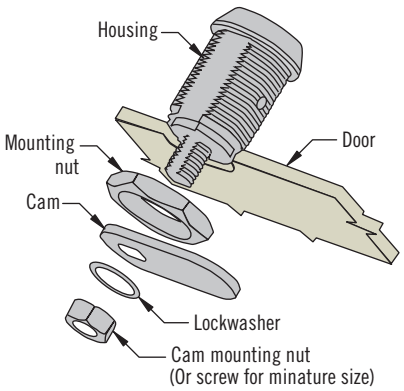

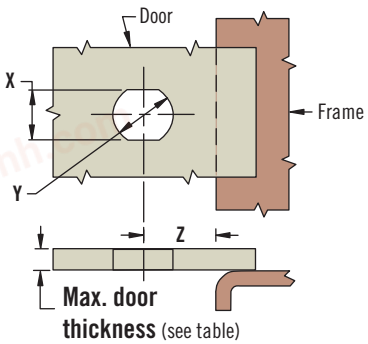

Part Number Selection

See table

Lock part number (no cam)

Order lock and cam separately

Cam page 171

R Rotation
01 Clockwise
09 Counter-clockwise

K Key removal
B Locked / unlocked removal
L Locked removal only

PT - 1 - H C1 R - 20 K - KC

KC Key Code
KA Keyed alike T0001 (2 keys supplied)
KD Keyed differently 50 key codes (T0001 to T0050) provided in a non-master key system (2 keys supplied)

H Housing Length Number	Housing Length	Stud Length	Max. Door Thickness
1	12.7 (.50)	8.9 (.35)	5.1 (.20)
2	17.5 (.69)	9.5 (.37)	10.9 (.43)
3	23.8 (.94)	9.5 (.37)	15.9 (.63)
4	30.5 (1.20)	9.5 (.37)	22.9 (.90)
5	36.5 (1.44)	9.5 (.37)	28.9 (1.14)

Other options available. For complete details on variety, part numbers, installation and specification, go to

INFO CLIC *www.southco.com/PT*

Dimensions in millimeters (inch) unless otherwise stated

chanhvinh.com

PT Tubular Key Cam Locks

Cams & installation



Installation

Standard

Cam Grip					Max. Door Thickness	Housing Length Number
19.0 (.75)	15.9 (.63)	12.7 (.50)	9.5 (.38)	6.4 (.25)	5.1 (.20)	1
23.8 (.94)	20.7 (.81)	17.5 (.69)	14.3 (.56)	11.2 (.44)	10.9 (.43)	2
30.1 (1.19)	27 (1.06)	23.8 (.94)	20.6 (.81)	17.5 (.69)	15.9 (.63)	3
36.8 (1.45)	33.7 (1.33)	30.5 (1.20)	27.3 (1.08)	24.2 (.95)	22.9 (.90)	4
42.8 (1.69)	39.7 (1.56)	36.5 (1.44)	33.3 (1.31)	30.2 (1.19)	28.9 (1.14)	5

Cam Part Number					Cam Type
Cam Reversed		Straight	Cam Forward		
PT-T409	PT-T209	PT-T009	PT-T209	PT-T409	No Hook
PT-W409	PT-W209	PT-F009	PT-F209	PT-F409	Left
PT-F409	PT-F209	PT-F009	PT-W209	PT-W409	Right

Also use the online configurator at www.southco.com

Cam Styles

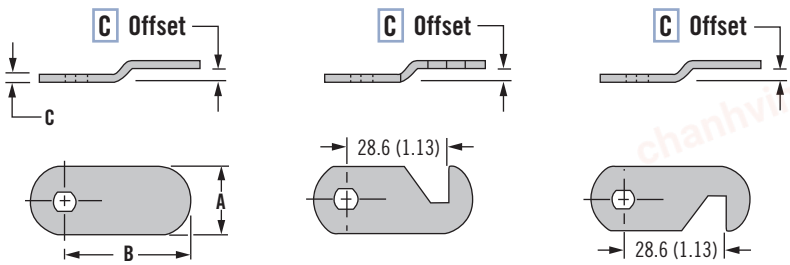

S T - No hook

S F - Hook type 1

S W - Hook type 2

Material

1. In the TAN section, locate the cam grip calculated for your application. If your grip falls between two values, use the higher value.

Notes: For cam grips that can be achieved with multiple housing lengths, use the value that results in the shortest housing possible based on the Max. door thickness allowed.

2. From this value, move right horizontally into the Gray section and verify your door thickness falls within the Max. door thickness listed. Once this is verified, the housing length is selected and is illustrated by the housing length number.
3. Returning to your original grip value in the TAN section, move down vertically into the GREEN section. The GREEN section illustrates the cams that are appropriate for your grip.
4. By determining the required cam orientation and style in the BLUE section, the appropriate cam for your application is selected.

Part Number Selection

See table

Order lock and cam separately

Cam part number (no lock)

For Lock selection see page 170

S Cam Style
T No hook
F Hook type 1
W Hook type 2

PT - S C 09

C Cam Offset
0 No offset
2 3.2 (.125)
4 6.4 (.250)

Series	Cam Style T No hook		
	A	B	C
Standard	19 (.75)	28.6 (1.13)	3 (.12)

STANDARD ACTUAL SIZE

Other options available. For complete details on variety, part numbers, installation and specification, go to

INFO CLIC *www.southco.com/PT*

Dimensions in millimeters (inch) unless otherwise stated