chanhvinh.com



P7 *ATCA*® Inject / Eject Mechanism

Ejectors

- **Ergonomic inject / eject lever designed for easy operation**
- **Secondary catch on inject / eject operates microswitch to permit hot-swapping**

Material and Finish

Steel plated and glass-filled nylon, black
Washers: Stainless steel

Performance Details

Flammability rating: UL94-V0

Installation Notes

See page 577

Notes

Custom colors available, please contact Southco

Lever Style Switch Operation

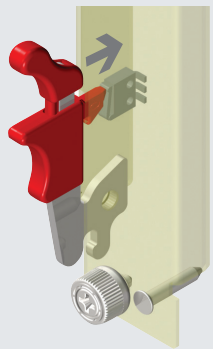

Plunger Style Switch Operation

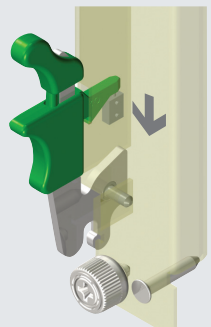

ATCA is a registered trademark of PICMG® - PCI Industrial Computer Manufacturers Group, Inc.

Lever Style Switch

Panel thickness 0.8 - 1.5 (.031 - .059)

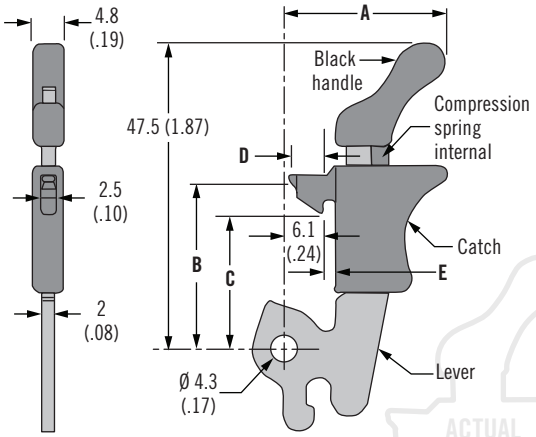

Panel thickness 2 - 2.5 (.078 - .098)

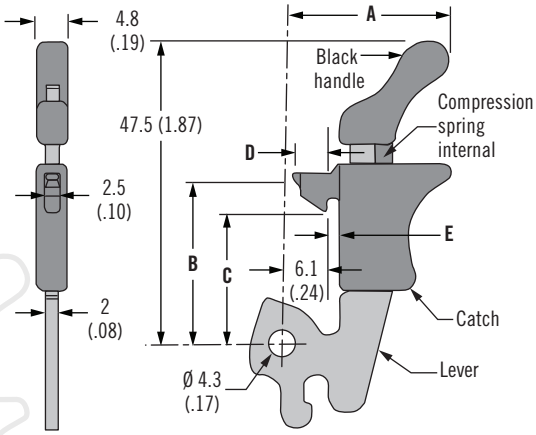

Plunger Style Switch

Panel thickness 0.8 - 1.5 (.031 - .059)

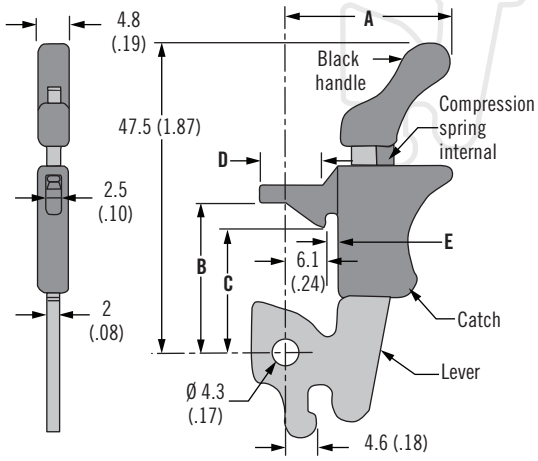

Panel thickness 2 - 2.5 (.078 - .098)

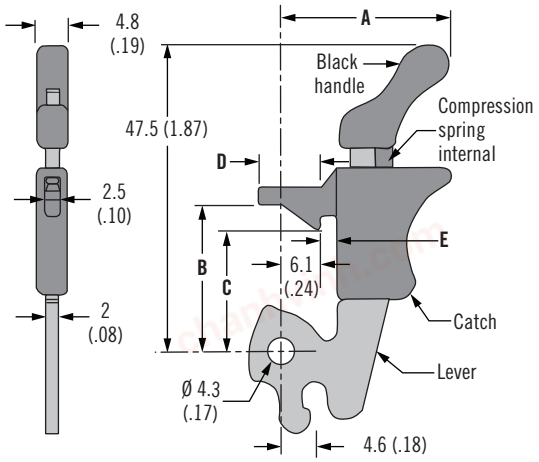

Style	Panel Thickness	Part Number	A	B	C	D	E
Lever style complete with u-bent washer	0.8 - 1.5 (.031 - .059)	P7-A-513-11	25.2 (.99)	26.1 (1.03)	20.8 (.82)	5.4 (.21)	1.9 (.07)
	2 - 2.5 (.078 - .098)	P7-A-523-11	26.2 (1.03)	26.1 (1.03)	20.8 (.82)	5.4 (.21)	2.9 (.11)
Plunger style complete with belleville washer	0.8 - 1.5 (.031 - .059)	P7-A-533-11	25.2 (.99)	23 (.90)	19 (.75)	9.6 (.38)	1.9 (.07)
	2 - 2.5 (.078 - .098)	P7-A-543-11	25.2 (.99)	23 (.90)	19 (.75)	9.6 (.38)	2.9 (.11)

U-Bent Washer (supplied)

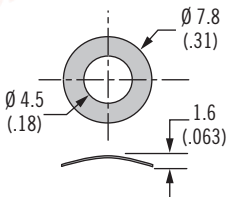

Belleville Washer (supplied)

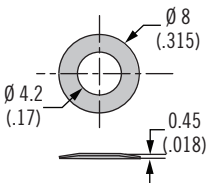

Dimensions in millimeters (inch) unless otherwise stated

ACTUAL SIZE

chanhvinh.com

P7 *ATCA*® Inject / Eject Mechanism

Captive screws



Metal Version

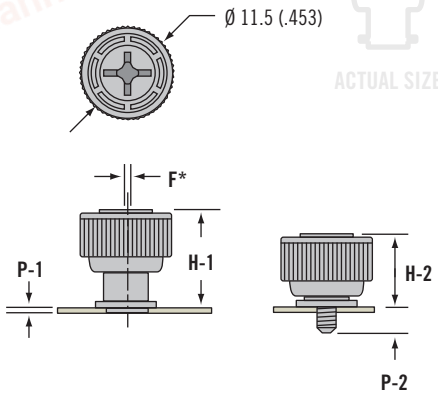

Overmolded Version

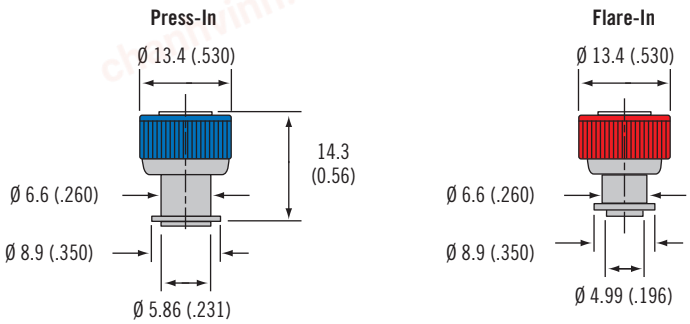

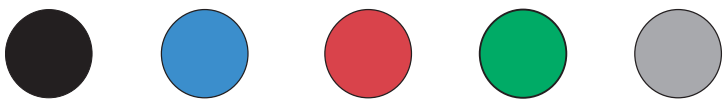

000 Black **008** Blue **013** Red **014** Green Your color (contact Southco)

- **M3 thread**
- **No. 2 Phillips recess**
- **Color match available**

Material and Finish

Screw, ferrule and internal spring stainless steel, knob aluminum or PC/ABS

Performance Details

Flammability rating: UL94-V0
ATCA® R3.0 compliant screw

Installation Notes

Please refer to installation drawings on page 577 for reference on dimensions **B***, **Ø D*** and **Ø Z***

F* indicates maximum float in the unfastened position

Part Number

See table

Specifying Color:
To indicate color, change the last three digits of the part number.
Example:
47-99-945-1P0-K000, black
47-99-945-1P0-K013, red

ATCA is a registered trademark of PICMG® - PCI Industrial Computer Manufacturers Group, Inc.

Series	Installation Method	Panel Thickness			Part Number	H-1	H-2	P-1	P-2	F*	Panel Preparation	
		A Min.	A Max.	B*	No. 2 Phillips						Ø D*	Ø Z*
ATCA compliant (Metal Version)	Press-in	0.9 (.036)	~	~	47-99-945-1P0	14.3 (.56)	10.1 (.40)	1.0 (.39)	5.0 (.20)	1 (.039)	5.95 ±0.04 (.234±.002)	$3.2^{+0.2}_{-0.1}$ ($.125^{+.008}_{-.004}$)
	Flare-in	0.8 (.031)	1.5 (.060)	0.4 (.016)	47-99-944-1F1	14.3 (.56)	10.1 (.40)	1.0 (.39)	5.0 (.20)	1 (.039)	$5.1^{+0.1}_{-0}$ ($.20^{+.004}_{-0}$)	$3.0^{+0.1}_{-0}$ ($.118^{+.004}_{-.000}$)
ATCA compliant (Overmolded Version)	Press-in	0.9 (.036)	~	~	47-99-945-1P0-K000	14.3 (.56)	10.1 (.40)	1.0 (.39)	5.0 (.20)	1 (.039)	5.95 ±0.04 (.234±.002)	$3.2^{+0.2}_{-0.1}$ ($.125^{+.008}_{-.004}$)
	Flare-in	0.8 (.031)	1.5 (.060)	0.4 (.016)	47-99-944-1F1-K000	14.3 (.56)	10.1 (.40)	1.0 (.039)	5.0 (.20)	1 (.039)	$5.1^{+0.1}_{-0}$ ($.20^{+.004}_{-0}$)	$3.0^{+0.1}_{-0}$ ($.118^{+.004}_{-.000}$)

chanhvinh.com



P7 *ATCA*® Inject / Eject Mechanism

Guide pin

- **Bullet tip for better engagement**
- **Self-clinching style for easy installation**

Material and Finish

Stainless steel

Installation Notes

Edge of hole must be sharp – do not chamfer.

See page 577 for reference on usage of guide pin.

Self-clinching install details see page 627

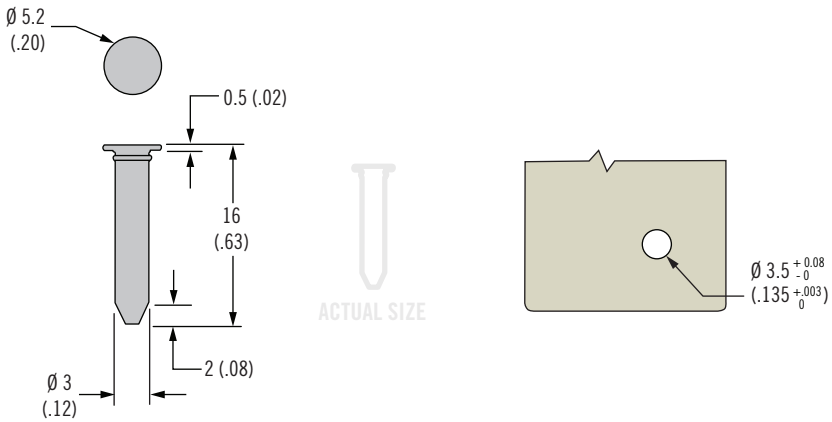

Part Number
77-0-40552

www.southco.com/P7



P7 *ATCA*® Inject/Eject Mechanism

Mounting screws M 2.5

- **Accommodates all standard *ATCA*® PC board thicknesses**
- **Vibration-resistant nylon patch**

Material and Finish

Steel zinc plated

Installation Notes

Please refer to installation drawings on page 577 for reference on usage of mounting screws

ATCA is a registered trademark of PICMG® - PCI Industrial Computer Manufacturers Group, Inc.

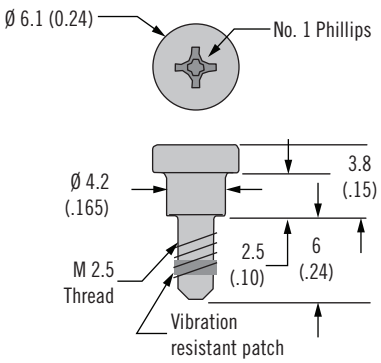

Part Number
P7-0-41665-1

www.southco.com/P7

Dimensions in millimeters (inch) unless otherwise stated

chanhvinh.com

P7 *ATCA*® Inject / Eject Mechanism

Faceplate panel preparation (with PCB mounting tab fabrication)



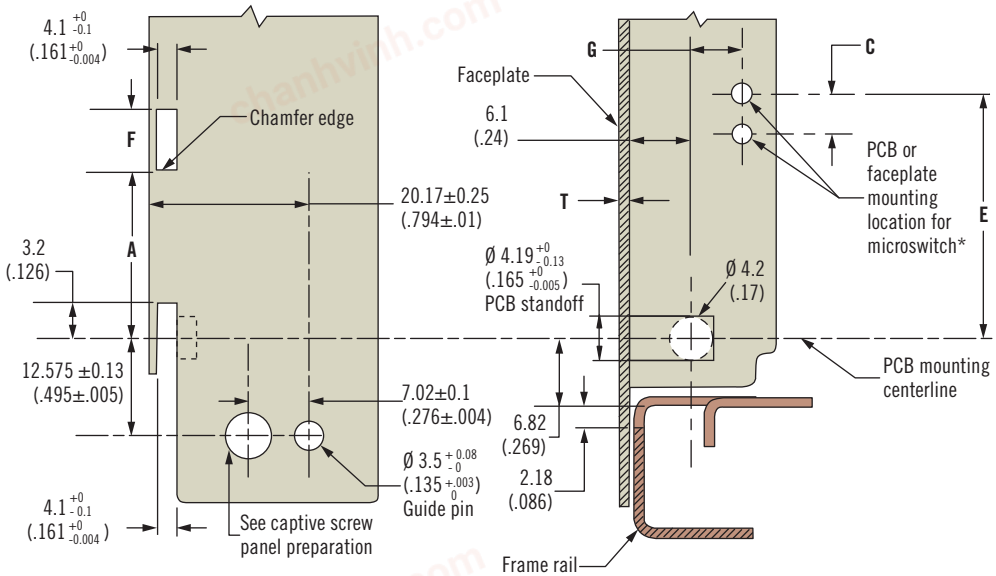

Switch Styles	Part Number	A	F	C	G	E	T
Lever	P7-A-513-11	22 (.866)	7.5 (.296)	4 (.16)	25.4 (1.0)	5.2 (.2)	0.8 - 1.5 (.031 - .059)
	P7-A-523-11	21.7 (.85)	7.8 (.31)				2 - 2.5 (.078 - .098)
Plunger	P7-A-533-11	20.2 (.795)	9 (.354)	3 (.12)	20.4 (.8)	1.9 (.07)	0.8 - 1.5 (.031 - .059)
	P7-A-543-11						2 - 2.5 (.078 - .098)

Captive Screw Panel Preparation and Installation (see page 497 for selection of captive screws)

Press-In

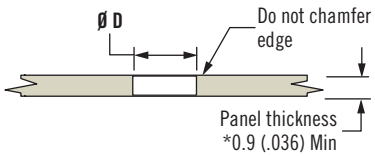

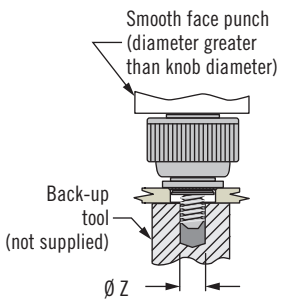

Flare-In

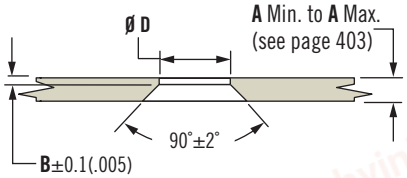

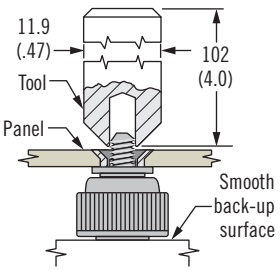

Flare-In Tool Part Number (M3 Thread Size)
47-104

Installation Notes

Select ejector, guide pin and mounting screw part number.

Select captive screw best suited to your application.

Notes

Faceplates generally require two ejectors, two captive screws, two mounting screws and two guide pins.

*Microswitch lever style operation ITT MD002 or plunger style operation ITT SD002

See page 575 for ejector selection

Installation Notes

See page 575 for **B, Ø D** and **Ø Z** dimensions.

Press-in:

1. Prepare panel as shown, do not chamfer edge.
2. Place standoff into installation hole.
3. Provide solid back-up behind hole with clearance hole for screw.
4. Press part into panel. Punch must not touch plastic knob during installation.

Recommended minimum distance from the panel edge to the centerline of the installation hole is 1.5 x Ø D. * For panels thinner than 0.9 (.036) contact Southco.

Flare-in

1. Prepare panel as shown.
2. Use light pressure to flare standoff, assuring parallel surfaces on the punch and installation tool. Installation force depends on screw size.
3. Punch cannot touch plastic during installation.

ATCA is a registered trademark of PICMG® - PCI Industrial Computer Manufacturers Group, Inc.