chanhvinh.com

M1 Push-to-Close Latch

Turn-to-open



Non-Locking

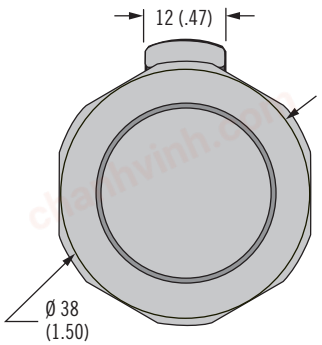

Locking

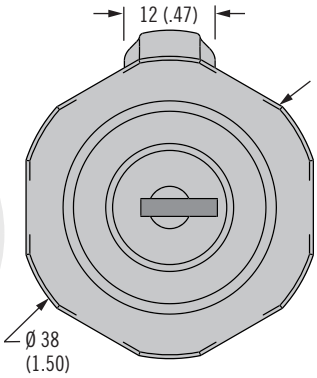

ACTUAL SIZE

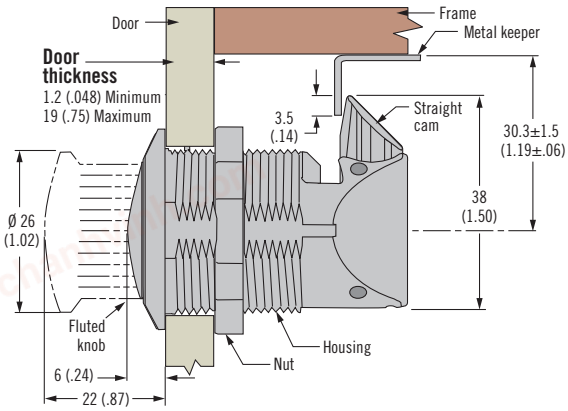

Keeper

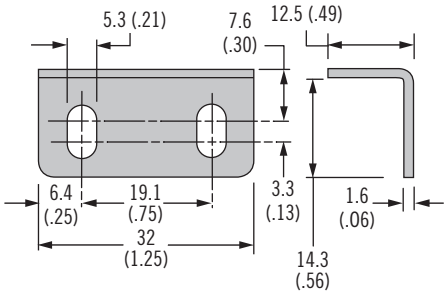

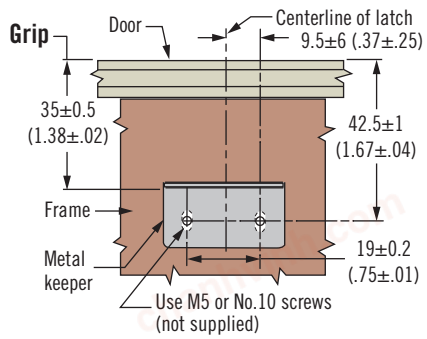

Installation

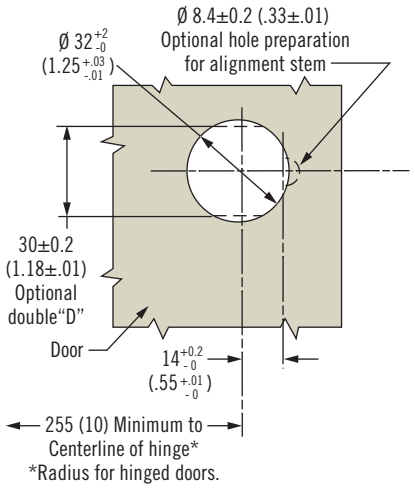

Finish	Part Number	
	Non-locking	Locking
Chrome	M1-2A-13-1	-
Black	M1-2A-13-5	M1-2A-23-5

- **Single, round-hole installation**
- **Flush pop out knob**
- **Corrosion-resistant materials**

Material and Finish

PC/ABS, black or chrome plated

Performance Details

Max. working load: 310 N (70 lbf)

Operating temperature range:
-30°C (-22°F) to 60°C (140°F)

Flammability rating: UL94-HB

Installation Notes

Max. tightening torque on mounting nut:
4.2 N·m (37 in·lbf)

Accessories

Replacement Keeper
Part number: M1-519-4

Closed

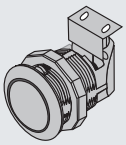

Push To Pop Out Knob

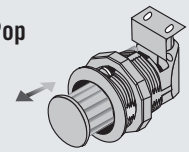

Turn Knob To Open

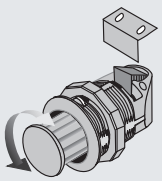

Part Number

See table

chanhvinh.com

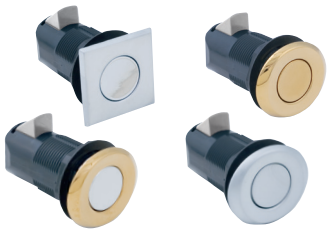

MP Point Push-to-Close Latch

Pull-to-open

- Single, round-hole installation
- Flush pop out knob
- Corrosion-resistant materials
- Keeper sold separately

Material and Finish

Housing: Glass-filled nylon

Flange and knob: Zinc alloy, plated

Cam: Zinc alloy

Fixed keeper: Stainless steel

Hooded keeper: Nylon, black

Installation Notes

Maximum tightening torque on mounting nut: 4.5 N·m (40 in·lbf)

Fixed keeper: Use M5 or No. 10 screws to mount (not supplied)

Hooded keeper: Use M5 or No. 10 screws to mount (not supplied)

Accessories

Matching pulls available see page 597

H Housing Style

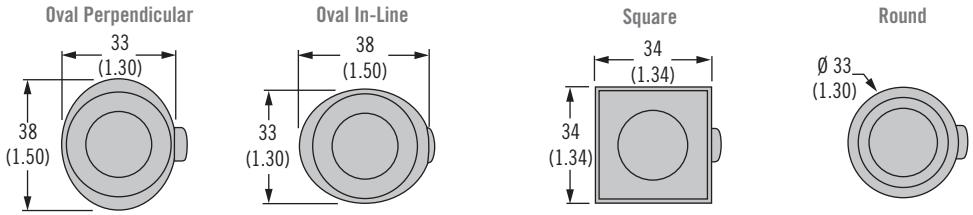

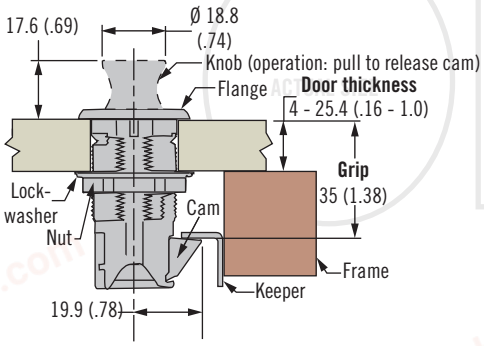

Installation

Latch Only (for keeper installation below)

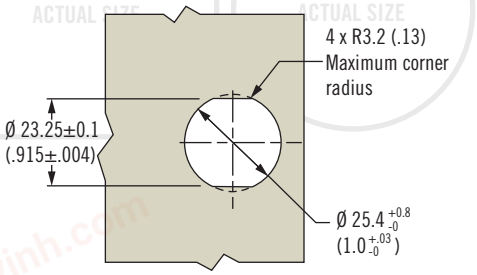

Fixed Keeper

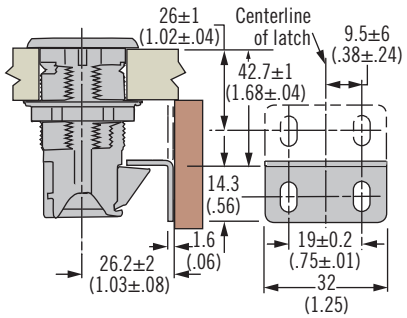

Hooded Keeper

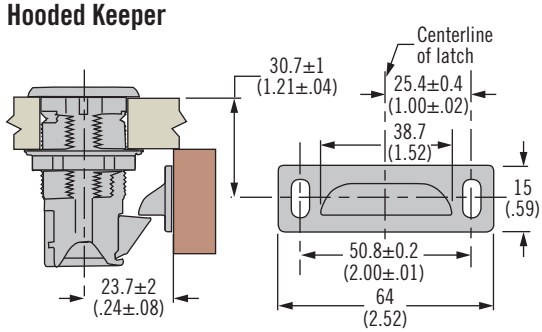

Fixed Keeper	Hooded Keeper
M1-519-4	MP-510-16-4

Part Number Selection

Latch only, keepers sold separately.

H Housing style
- 11 Oval perpendicular
- 12 Oval in-line
- 21 Square
- 31 Round

MP - 05 - H 2 - F K

F Flange finish
- 1 Chrome plated
- 2 Satin chrome plated
- 3 Brushed nickel plated
- 5 Black powder coated

K Knob finish
- 1 Chrome plated
- 2 Satin chrome plated
- 3 Brushed nickel plated
- 5 Black powder coated

Dimensions in millimeters (inch) unless otherwise stated

chanhvinh.com

MP Point Coat Hook

Pop-up hook



- **Flush pop out hook**
- **Snap-in or mounting nut installation**
- **Corrosion-resistant materials**

Material and Finish

Housing: Glass-filled nylon

Flange and hook: Zinc alloy, plated

Installation Notes

Maximum tightening torque on mounting nut: 4.5 N·m (40 in·lbf)

H Housing Style (with hanger image, **I** = 2)

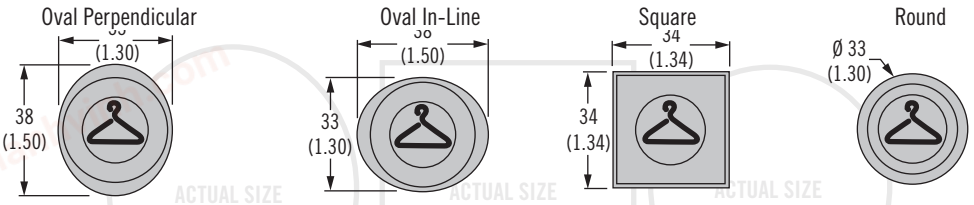

H Housing Style (without hanger image, **I** = 3)

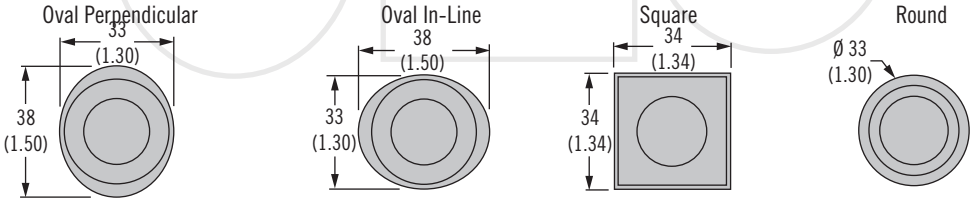

H Housing Style (with headset image, **I** = 4)

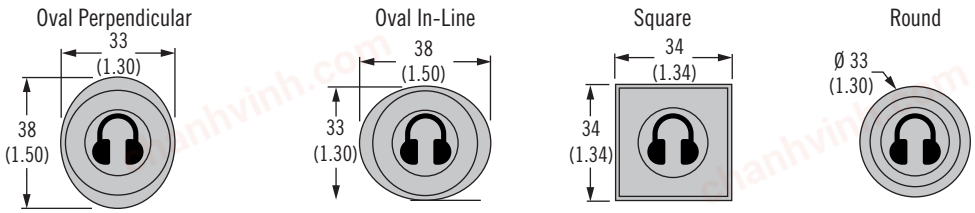

Mounting Nut Version

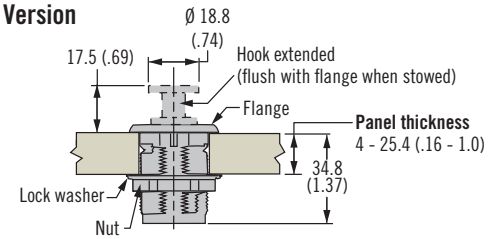

Snap-in-Version

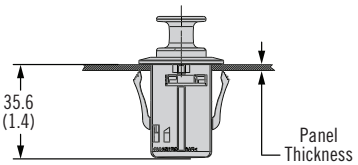

Mounting Nut Installation

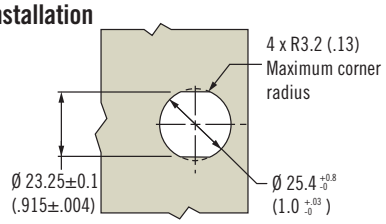

Snap-in-Installation

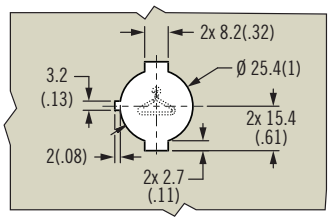

Part Number Selection

H Housing style
- **11** Oval perpendicular
- **12** Oval in-line
- **21** Square
- **31** Round

MP - 07 - H I - F K - P

I Image
- **2** Hanger
- **3** Blank
- **4** Headset

P Panel Thickness (Snap-in-Only)
- **None** Mounting nut 4-25.4(.16-1.0)
- **0** Snap-in 1.1-2.9(.043-.114)
- **1** Snap-in 2.9-5.3(.114-.209)
- **2** Snap-in 5.3-7(.209-.276)

F Flange finish
- **1** Chrome plated
- **2** Satin chrome plated
- **3** Brushed nickel plated
- **5** Black Powder Coat

K Hook finish
- **1** Chrome plated
- **2** Satin chrome plated
- **3** Brushed nickel plated
- **5** Black Powder Coat

(For image option 3 blank only)