chanhvinh.com

MP Novibra Push-to-Close Latch · Medium · Plastic · Turn to Open

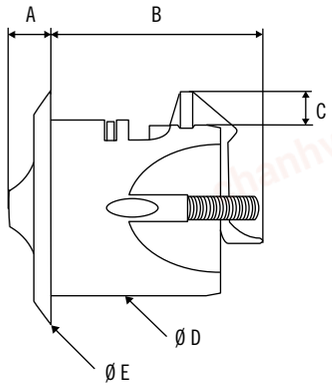

	Imperial		Metric
	Nominal	Decimal	
A	15/32	.472	12
B	1 3/4	1.752	44.5
C	13/32	.406	10
D	1 1/2	1.5	38
E	1 3/4	1.76	44.7



- **Fast, easy installation**
- **Weatherproof face**
- **Long bolt travel with an adjustable striker plate**

Panel Preparation

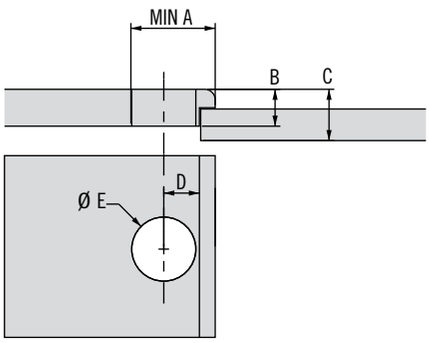

		Imperial		Metric
		Nominal	Decimal	
A		2	2	50
B	min.	1/8	.118	3
	max	7/8	.875	22.5
C	min.	7/8	.875	23
	max	1 5/16	1.313	33
D		1 7/32	1.219	31
E		1 33/64	1.516	38.5

Panel Thickness Range:

3 - 22mm (1/8" - 7/8")

The Novibra is designed for hatches, doors, drawers, cockpit lockers, and similar type applications. The Novibra helps eliminate noise in the hatch, doors or drawers caused by engine vibration.

Available Options:

Colors: Choose from black, white, chrome, diamond brass, and satin, in any combination of Cup and Handle. Additional colors and custom color-matching available on request. Contact Southco for details.

Installation

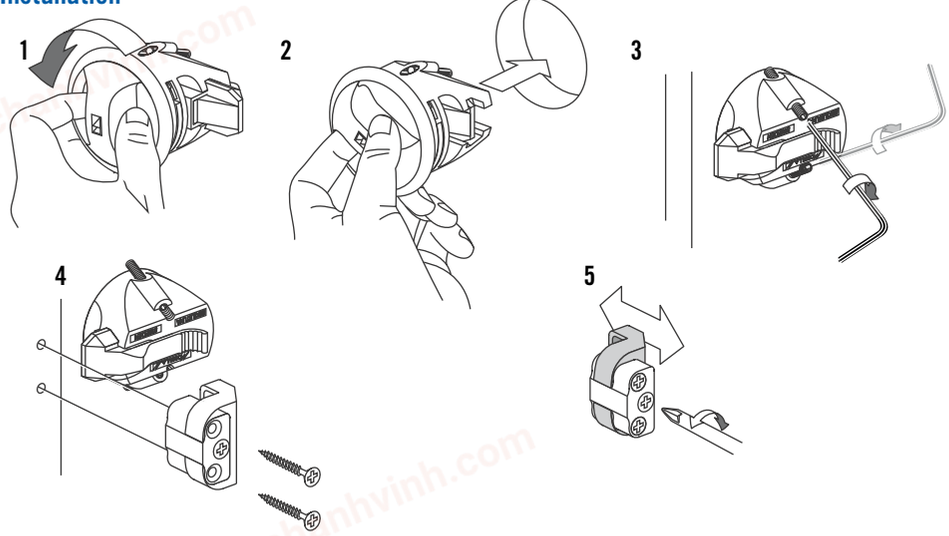

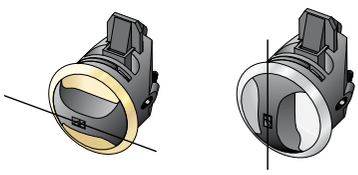

Type 1
(For drawers)

Type 2
(For doors)

Part Number Selection

T Type
1 For Drawers
2 For Doors

MP - 0 **T** - 103 - **B** **C** **H**

C Cup
1 Chrome
2 Satin
3 Brown
4 Diamond Brass
5 Black
7 White

B Body
5 Black
7 White

H Handle
1 Chrome
2 Satin
3 Brown
4 Diamond Brass
5 Black
7 White

Non vibration feature

