chanhvinh.com



M1 Push-to-Close Latch

Pull-to-open

- **Single, round-hole installation**
- **Flush pop out knob**
- **Corrosion-resistant materials**

Material and Finish

PC/ABS, black or chrome plated

Performance Details

Max. working load: 310 N (70 lbf)

Operating temperature range: -30°C (-22°F) to 60°C (140°F)

Flammability rating: UL94-HB

Installation Notes

Max. tightening torque on mounting nut: 4.2 N·m (37 in·lbf)

Accessories

Replacement Keeper
Part number: M1-2A-9-105-41

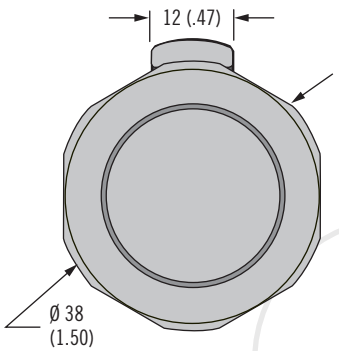

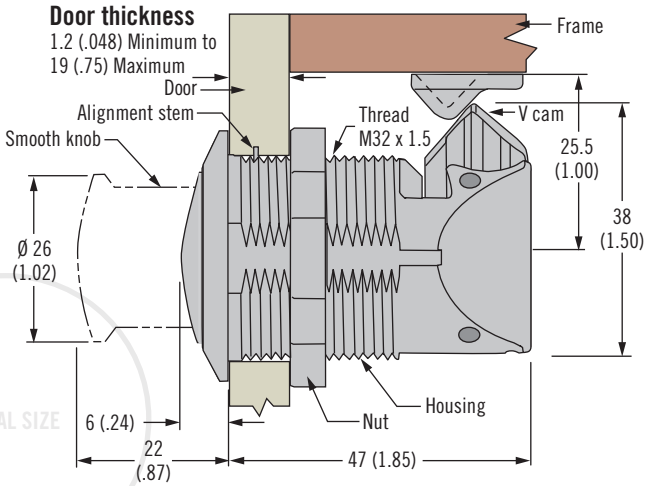

Closed

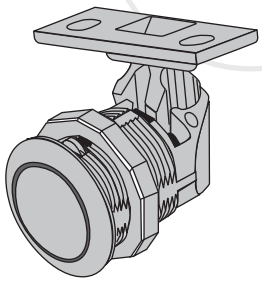

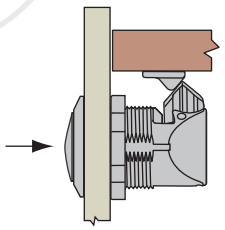

Push To Pop Out Knob

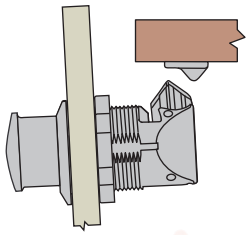

Pull Knob To Open

Installation

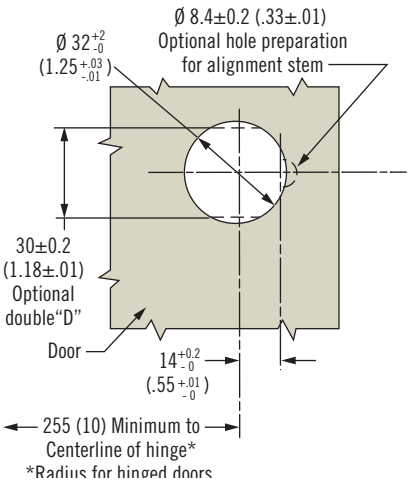

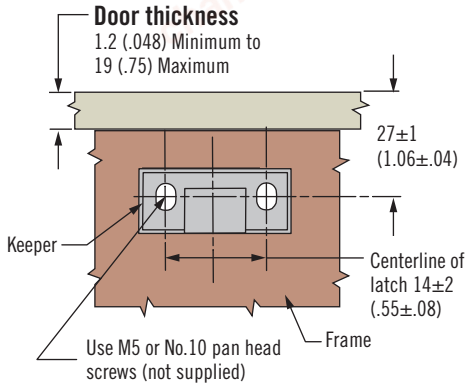

Keeper

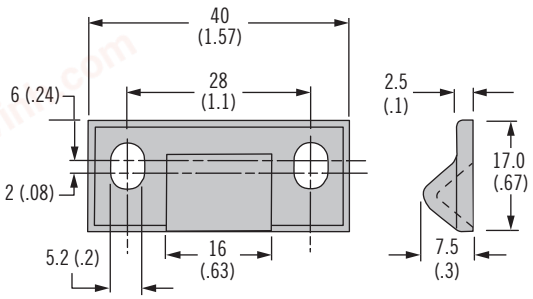

Finish	Part Number
Chrome	M1-2A-15-1
Black	M1-2A-15-5

Part Number

See table

Dimensions in millimeters (inch) unless otherwise stated

chanhvinh.com

M1 Push-to-Close Latch

Turn-to-open



Non-Locking

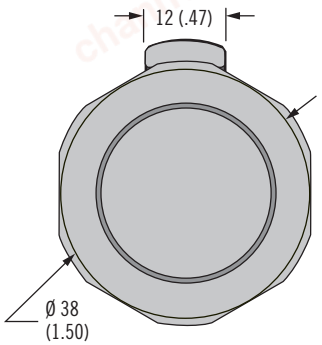

Locking

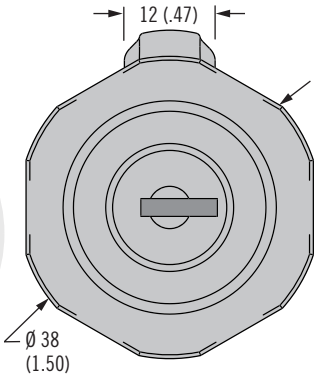

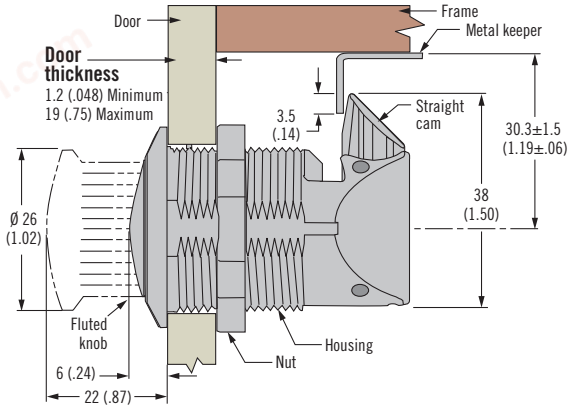

Keeper

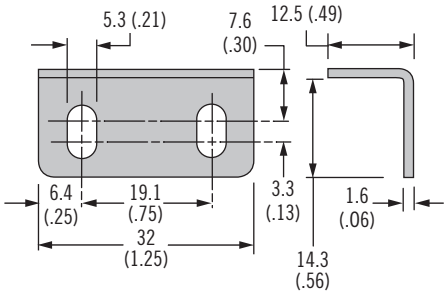

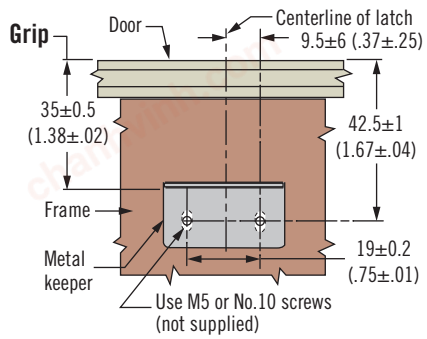

Installation

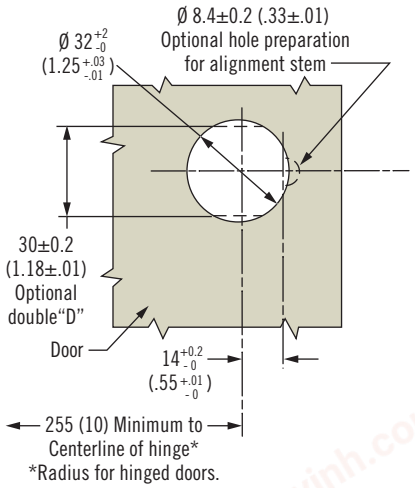

Finish	Part Number	
	Non-locking	Locking
Chrome	M1-2A-13-1	-
Black	M1-2A-13-5	M1-2A-23-5

- **Single, round-hole installation**
- **Flush pop out knob**
- **Corrosion-resistant materials**

Material and Finish

PC/ABS, black or chrome plated

Performance Details

Max. working load: 310 N (70 lbf)

Operating temperature range:
-30°C (-22°F) to 60°C (140°F)

Flammability rating: UL94-HB

Installation Notes

Max. tightening torque on mounting nut:
4.2 N·m (37 in·lbf)

Accessories

Replacement Keeper
Part number: M1-519-4

Closed

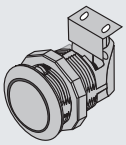

Push To Pop Out Knob

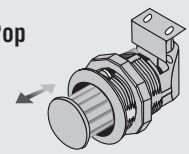

Turn Knob To Open

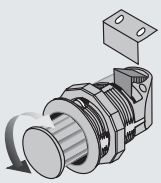

Part Number

See table