chanhvinh.com

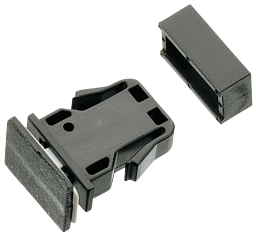

E4 Push-to-Close Latch

Push-to-open · Touch latch · Small

- **Concealed latch points**
- **Door ejection feature**
- **Snap-in installation**

Material and Finish

Latch and keeper: Acetal, black
Alignment guide: Acetal, white

Performance Details

Average tensile load: 15 N (3.5 lbf)

Operating temperature range: -40°C (-40°F) to 105°C (220°F)

Flammability rating: UL94-HB

Installation Notes

Be sure the mounting surface is clean and capable of retaining a satisfactory adhesive bond.

Self-adhesive keepers are designed to function under intermittent break-away loads

Part Number

See table

Latch

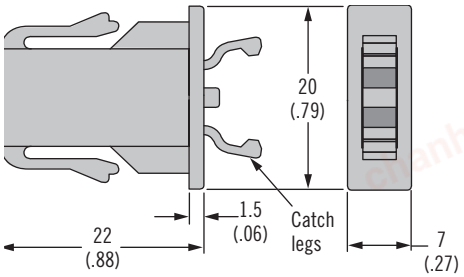

Keeper Assembly

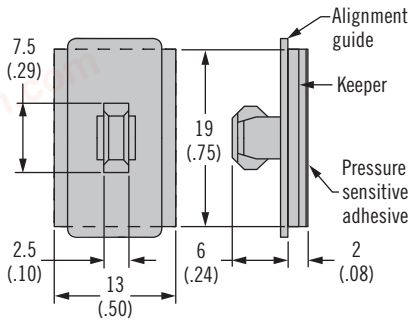

Spacer

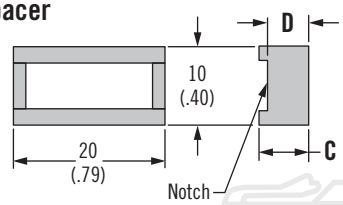

Unlatched **Latched**

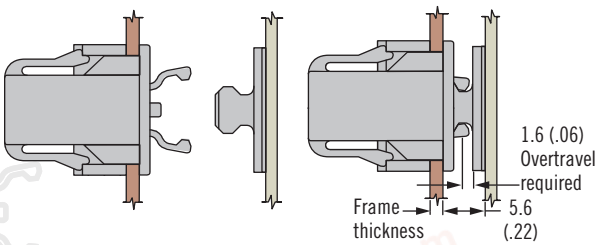

ACTUAL SIZE

Installation

1. Prepare frame. Snap latch into place.

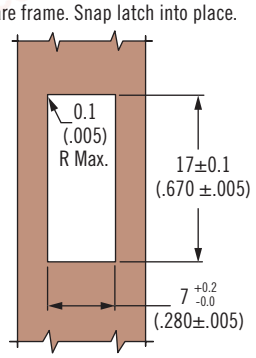

2. Install spacer (If required).

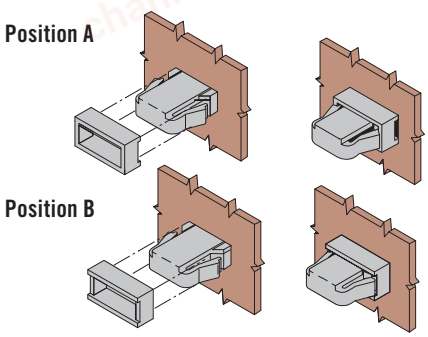

3. With alignment guide in place, engage keeper with latch. (If catch legs are retracted, push them into the latch housing to release before proceeding).

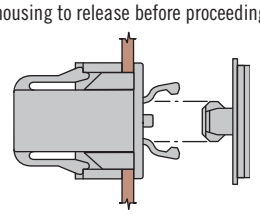

4. Peel protective backing from keeper. Close door against adhesive.

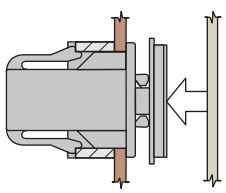

5. Remove alignment guide from keeper and discard.

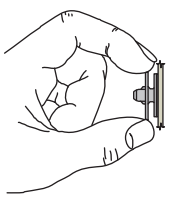

Frame Thickness		Part Number	Spacer Position Installed	Spacer Thickness		Spacer Colour
Min.	Max.			C	D	
0.8 (.030)	1 (.040)	E4-10-102-10	A	7.5 (.295)	6.9 (.270)	Black
1.4 (.055)	1.7 (.065)		B			
1.8 (.070)	2 (.080)	E4-10-103-10	A	6.5 (.255)	5.3 (.210)	Natural
2.9 (.115)	3.2 (.125)		B			
4.6 (.182)	4.9 (.192)	E4-10-104-10	A	3.6 (.143)	2 (.080)	Grey
6.2 (.245)	6.5 (.255)		B			
8.1 (.320)	8.6 (.340)	E4-10-101-10	Spacer not required			

Dimensions in millimeters (inch) unless otherwise stated

chanhvinh.com

E4 Push-to-Close Latch

Push-to-open · Touch latch · Large



Latch

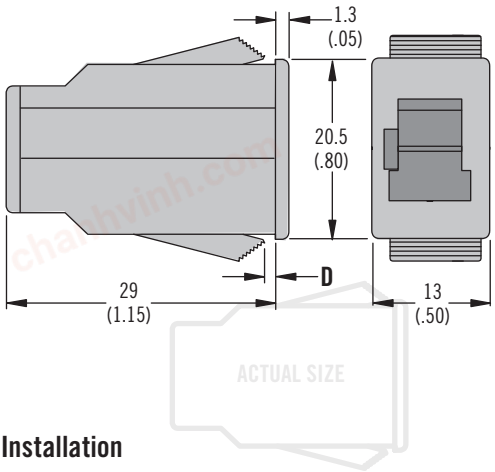

Keeper Assembly

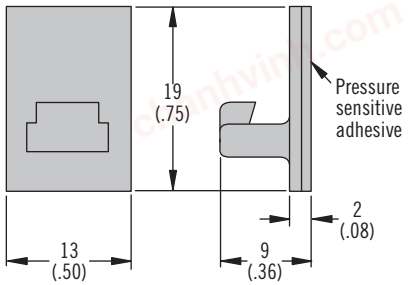

Installation

1. Prepare frame

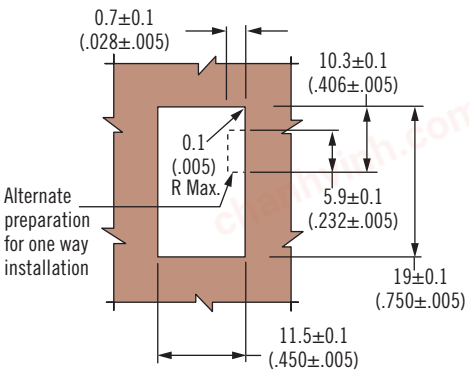

2. Snap latch into place

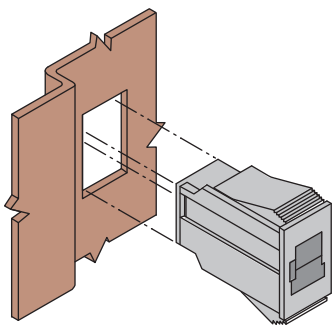

3. Re-engage keeper with latch

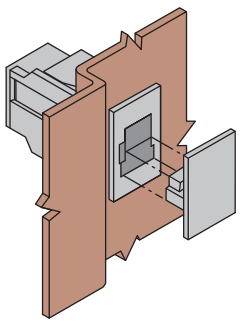

4. Peel protective backing from keeper
Close door against adhesive

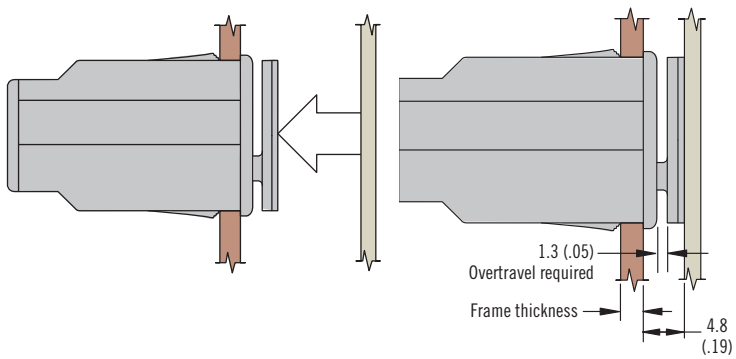

Frame Thickness		D	Part Number
Min.	Max.		
1 (.04)	3 (.12)	0.9 (.035)	E4-10-201-10
3 (.12)	5 (.20)	2.9 (.115)	E4-10-202-10
5 (.20)	7 (.28)	4.9 (.196)	E4-10-203-10

- **Concealed latch points**
- **Door ejection feature**
- **Snap-in installation**

Material and Finish

Latch and keeper: Acetal, black and thermoplastic polyester, black

Performance Details

Average tensile load:
Self-adhesive keeper: 50 N (11 lbf)
Integrally moulded keeper:
120 N (27 lbf)

Operating temperature range:
-40°C (-40°F) to 105°C (220°F)

Flammability rating: UL94-HB

Installation Notes

Be sure the mounting surface is clean and capable of retaining a satisfactory adhesive bond. Keeper can be moulded into application door

Self-adhesive keepers are designed to function under intermittent break-away loads

Part Number

See table