chanhvinh.com



D7 *DZUS*® Pilot Quarter-Turn Fasteners

Studs

Material and Finish

Studs: Steel, zinc plated plus chromate
Washer: Neoprene, black

Notes

Select stud and washer part number from table based on your panel thickness P

Part Number

See table

Order stud and washer separately

Studs

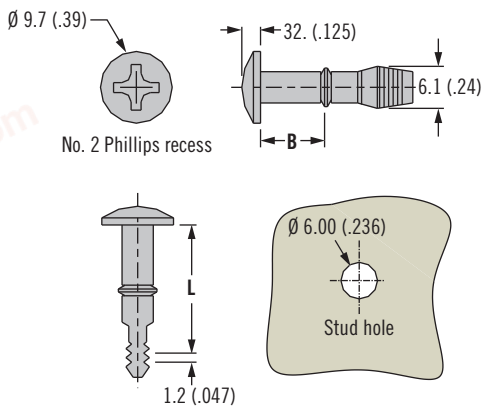

Washer

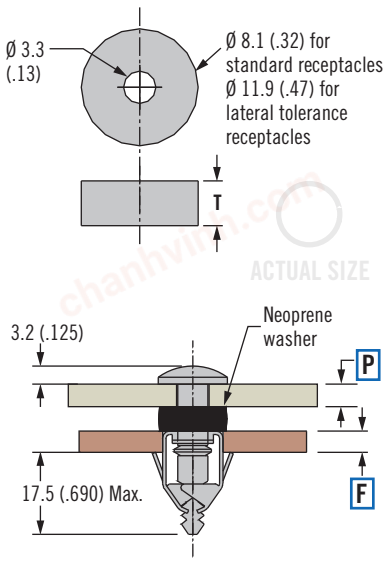

P Panel Thickness	Stud L	Stud B	T Washer Thickness	Part Number			
				Stud		Neoprene Washer	
				Black chromate	Bright chromate	For standard receptacle	For lateral tolerance receptacle
1.3 (.05) to 1.7 (.07)	16 (.63)	7.1 (.28)	4.1 (.16)	D7-265-716-191	D7-265-716-190	D7-275-040-400	D7-275-140-400
1.8 (.07) to 2.2 (.09)	16 (.63)	7.1 (.28)	3.6 (.14)	D7-265-716-191	D7-265-716-190	D7-275-035-400	D7-275-135-400
2.3 (.09) to 2.7 (.11)	17.8 (.70)	8.9 (.35)	5.1 (.20)	D7-265-718-191	D7-265-718-190	D7-275-050-400	D7-275-150-400
2.8 (.11) to 3.2 (.12)	17.8 (.70)	8.9 (.35)	4.6 (.18)	D7-265-718-191	D7-265-718-190	D7-275-045-400	D7-275-145-400
3.3 (.13) to 3.7 (.15)	17.8 (.70)	8.9 (.35)	4.1 (.16)	D7-265-718-191	D7-265-718-190	D7-275-040-400	D7-275-140-400
3.8 (.15) to 4.2 (.17)	17.8 (.70)	8.9 (.35)	3.6 (.14)	D7-265-718-191	D7-265-718-190	D7-275-035-400	D7-275-135-400
4.3 (.17) to 4.8 (.19)	20.0 (.79)	10.9 (.43)	5.1 (.20)	D7-265-720-191	D7-265-720-190	D7-275-050-400	D7-275-150-400

Self-Ejecting Studs

Material and Finish

Steel, zinc plated and thermoplastic black

Notes

Select stud and washer part number from table based on your panel thickness P

Part Number

See table

Stud, cup and spring shipped pre-assembled

Order retainer separately

Self-Ejecting Studs

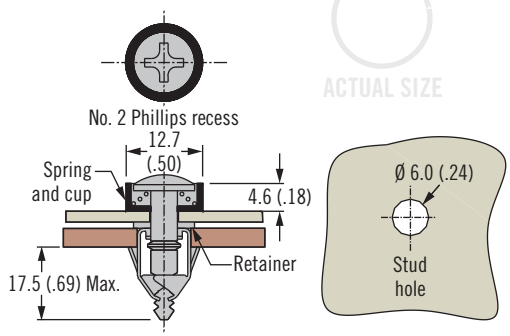

Retainer, Plastic

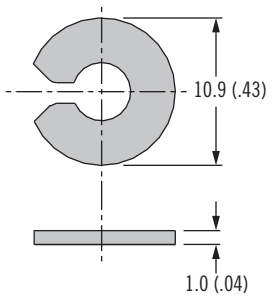

P Panel Thickness	Part Number	
	Black	Bright
0.5 - 3.0 (.02 - .12)	D7-290-718-191	D7-290-718-190
2.5 - 5.1 (.10 - .20)	D7-290-720-191	D7-290-720-190

Part Number
D7-275-203-040

Dimensions in millimeters (inch) unless otherwise stated

chanhvinh.com

D7 *DZUS*® Pilot Quarter-Turn Fasteners

Receptacles



Standard

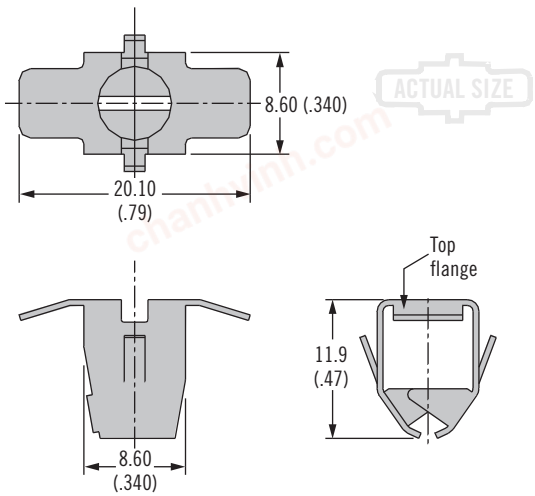

F Frame Thickness		Part Number
Min.	Max.	
0.63 (.025)	1.24 (.049)	D7-285-101-161
1.27 (.050)	1.75 (.069)	D7-285-102-161
1.78 (.070)	2.26 (.089)	D7-285-103-161

Material and Finish

Spring steel, zinc phosphate

Notes

Select receptacle based on frame thickness F

Part Number

See table

Lateral Tolerance

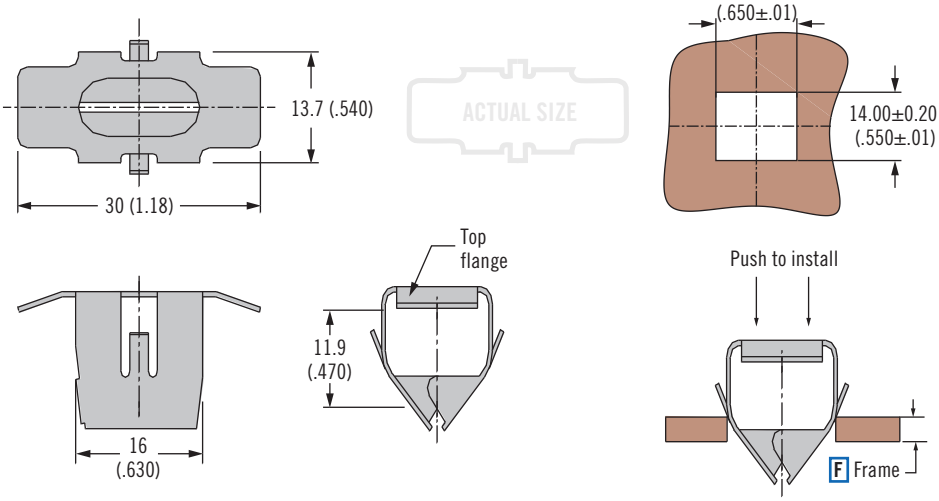

F Frame Thickness		Part Number
Min.	Max.	
0.63 (.025)	1.24 (.049)	D7-285-201-161
1.27 (.050)	1.75 (.069)	D7-285-202-161
1.78 (.070)	2.26 (.089)	D7-285-203-161
2.29 (.090)	2.77 (.109)	D7-285-204-161
2.79 (.110)	3.28 (.129)	D7-285-205-161

Material and Finish

Spring steel, zinc phosphate

Notes

Select receptacle based on frame thickness F

Part Number

See table

chanhvinh.com



D7 *DZUS*® Arrow Quarter-Turn Fasteners

Assembly

- **Surface install**
- **Panel mounted assembly**

Material and Finish

Acetal, black

Performance Details

Flammability rating: UL94-HB

ASTM E-162 Flame spread Index: 130

D7 Arrow Installation notes

200 series:

1. Press receptacle into outer panel.
2. Press stud into receptacle.
3. Press and turn stud to latch
4. Turn stud 90 degree to unlatch.

2001 series:

1. Separate Stud and receptacle from runner.
2. Press receptacle into outer panel.
3. Press stud into receptacle.
4. Press and turn stud to latch
5. Turn stud 90 degree to unlatch

Part Number

See table

200 Series: Order one receptacle and stud from the same size separately

2001 Series: Complete assembly supplied with runner attached as shown

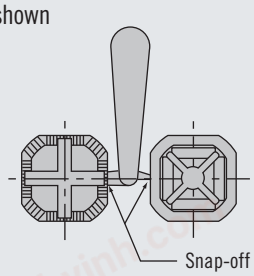

200 Series (order stud and receptacle separately)

Locked

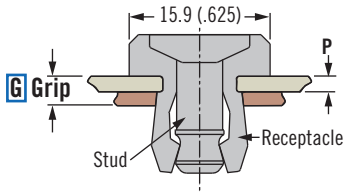

Released

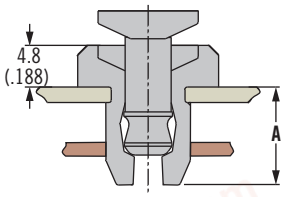

Hex Recess

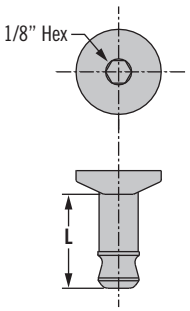

Slotted

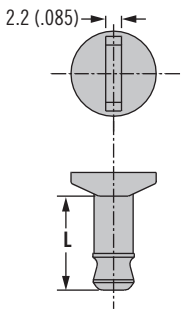

Knob

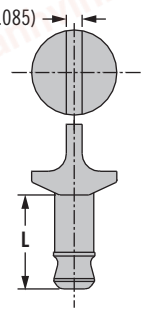

2001 Series

Latched

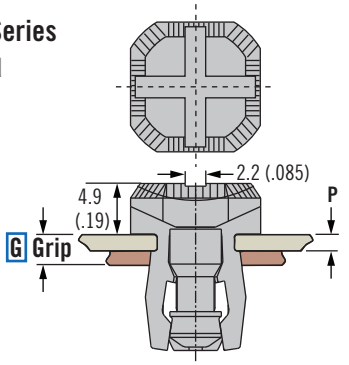

Unlatched

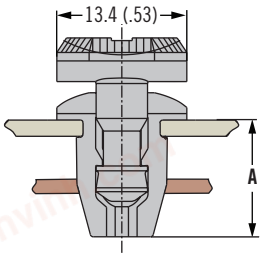

Installation

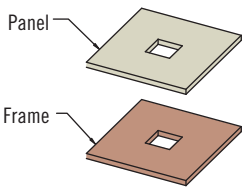

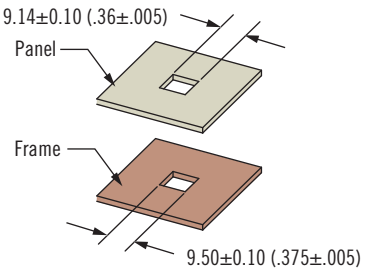

Series	A	Receptacle			Stud				
		P Panel Thickness		Part Number	G Grip Range		Part Number		
		Min.	Max.		Min.	Max.	Hex recess	Slotted recess	Knob
200	12.3 (.48)	0.50 (.020)	1.78 (.070)	D7-200-802-010	2.03 (.080)	5.08 (.200)	D7-200-701-010	D7-200-711-010	D7-200-721-010
	13.7 (.54)	1.80 (.071)	3.10 (.125)	D7-201-802-010	3.43 (.135)	6.35 (.250)	D7-201-701-010	D7-201-711-010	D7-201-721-010
2001	12.0 (.47)	Complete Assembly							
		0.05 (.020)	1.7 (.067)	~	2.5 (.098)	6.7 (.263)	D7-2001-010		

Dimensions in millimeters (inch) unless otherwise stated

DZUS® | southco®