chanhvinh.com





# CR Compression System

## Swinghandle actuator

- **Consistent compression**
- **Adjustable grip**
- **Meets NEMA 4 / IP66 and EMI standards**

### Material and Finish

Handle actuator:
Zinc alloy black powder coated
Mounting hardware:
Acetal black, stainless steel and brass

### Performance Details

Maximum static load:
500 N (110 lbf) per latch point
Average ultimate load:
1400 N (315 lbf)

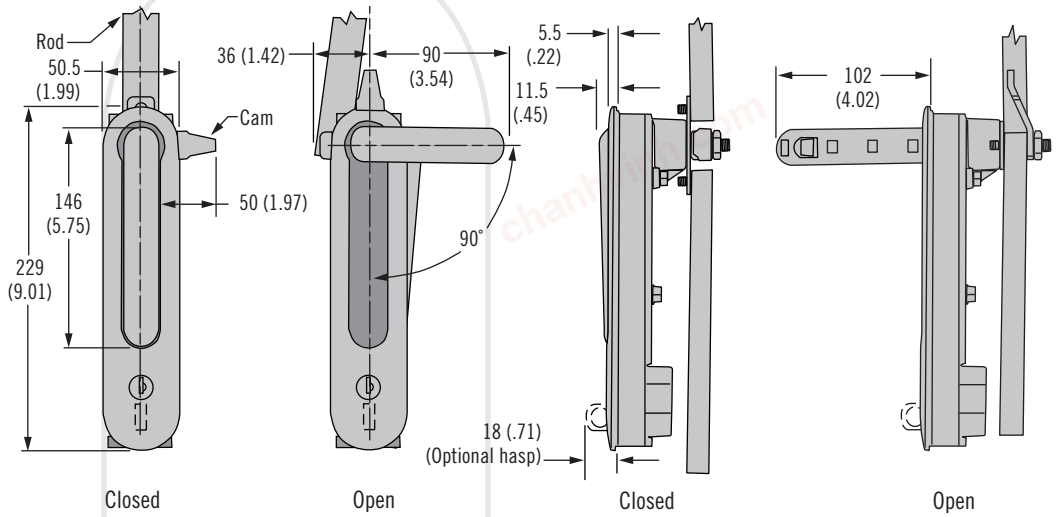


### Single Skin Door

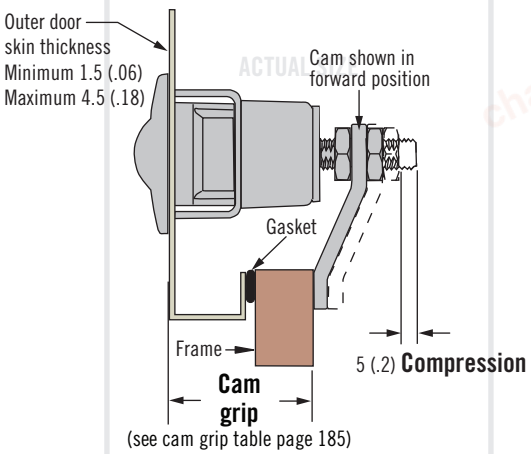


### Double Skin Door

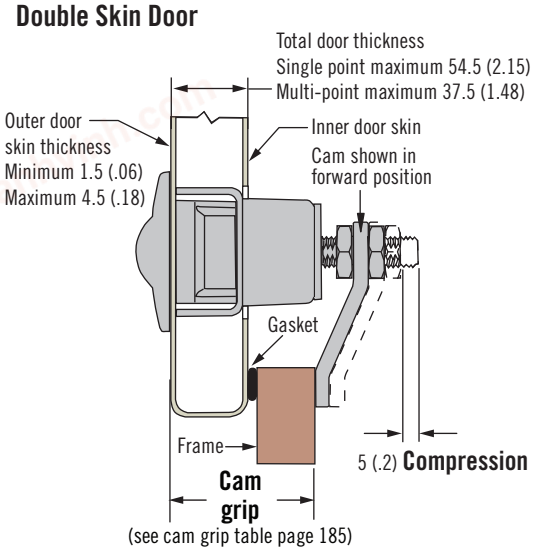


### Part Number Selection

See table

Actuator only

The complete system consists of:
Actuator (see part number selector)
Cam (see page 217)
Rod end (see page 218)
Rods (see page 218)
Rod guide (see page 218)
Order each component separately

**CR - 19 - L - R 5**

**L Lock style**
- **11** Key-locking keyed alike CH751 (2 keys supplied)
- **21** Keylocking keyed alike CH751 (2 keys supplied) and padlock hasp
- **32** DIN 18354 profile keyed alike 347876 (3 keys supplied)
- **44** Bellcore electronics
- **45** Bellcore 216
- **54** Bellcore electronics and padlock hasp
- **55** Bellcore 216 and padlock hasp

**R Rotation**
- **1** Universal 180°
- **2** Counter-clockwise 90°
- **3** Clockwise 90°



Dimensions in millimeters (inch) unless otherwise stated

chanhvinh.com



### Cam

See page 216 for definition of cam grip

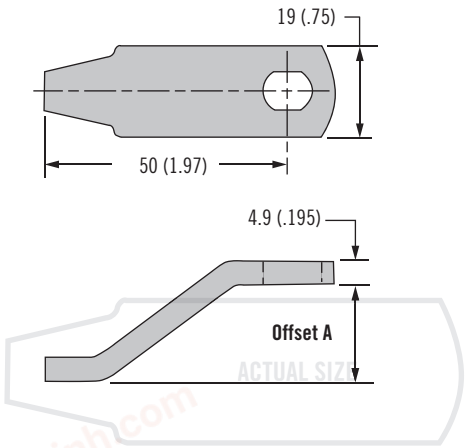


| Cam Part Number | Offset A | Cam Grip Range | |
|---|---|---|---|
| | | Cam Forward | Cam Reversed |
| CR-846-1000-24 | 0 (0.0) | 56.5 - 62 (2.23 - 2.44) | |
| CR-846-1005-24 | 5 (.20) | 51.5 - 57 (2.03 - 2.25) | 61.5 - 67 (2.42 - 2.64) |
| CR-846-1010-24 | 10 (.39) | 46.5 - 52 (1.83 - 2.05) | 66.5 - 72 (2.62 - 2.84) |
| CR-846-1015-24 | 15 (.59) | 41.5 - 47 (1.64 - 1.85) | 71.5 - 77 (2.82 - 3.03) |
| CR-846-1020-24 | 20 (.79) | 36.5 - 42 (1.44 - 1.66) | 76.5 - 82 (3.01 - 3.23) |
| CR-846-1025-24 | 25 (.98) | 31.5 - 37 (1.24 - 1.46) | 81.5 - 87 (3.21 - 3.43) |
| CR-846-1030-24 | 30 (1.18) | 26.5 - 32 (1.05 - 1.26) | 86.5 - 92 (3.41 - 3.62) |
| CR-846-1035-24 | 35 (1.38) | 21.5 - 27 (.85 - 1.07) | 91.5 - 97 3.60 - 3.82) |
| CR-846-1040-24 | 40 (1.58) | 16.5 - 22 (.65 - 87) | 96.5 - 102 (3.80 - 4.02) |
| CR-846-1045-24 | 45 (1.77) | 11.5 - 17 (.46 - .67) | 101.5 - 107 (3.99 - 4.22) |
| CR-846-1050-24 | 50 (1.97) | 6.5 - 12 (.26 - .47) | 106.5 - 112 (4.19 - 4.41) |

### Material and Finish

Stainless steel

### Part Number

Cam see table

The complete system consists of:
Actuator (see page 216)
Cam (see page 217)
Rod end (see page 218)
Rods (see page 218)
Rod guide (see page 218)

Order each component separately

### Assembly

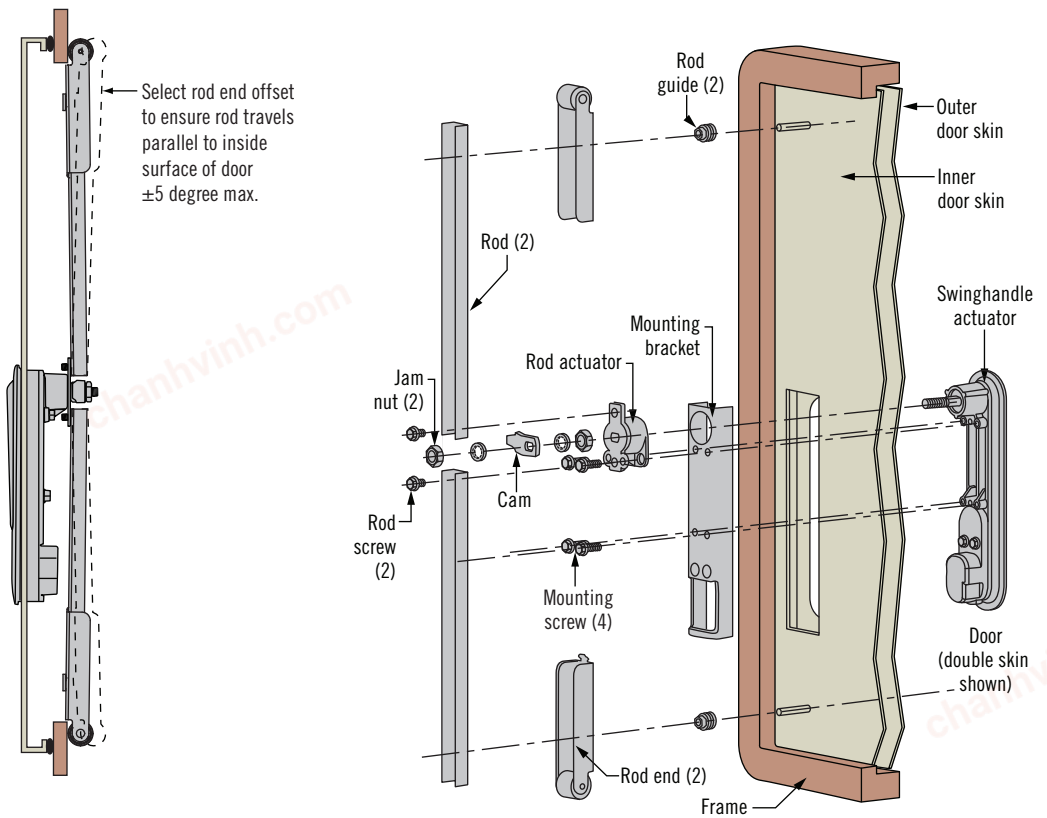

chanhvinh.com





# CR Compression System

## Rod end · Rod · Rod guide · Installation

### Material and Finish

Rod end: Stainless steel and nylon, black
Rod: Aluminum
Rod guide: Brass

### Notes

Rod end: When more than one rod end fits desired rod end grip range select the part number with the lowest offset value

Rod: Sold separately without mounting hole, in standard length of 1000 (39.37). Rod will need to be cut to desired lengths and mounting holes Ø 8.5 (.33) drilled. Minimum 300 (11.81), Maximum 1000 (39.37)

Rod guide: M6 thread with prevailing torque for vibration resistance

### Part Number

Rod end, rod and rod guides see tables

The complete system consists of:
Actuator (see page 216)
Cam (see page 217)
Rod end (see page 218)
Rods (see page 218)
Rod guide (see page 218)

Order each component separately

### Rod End - Negative offset shown

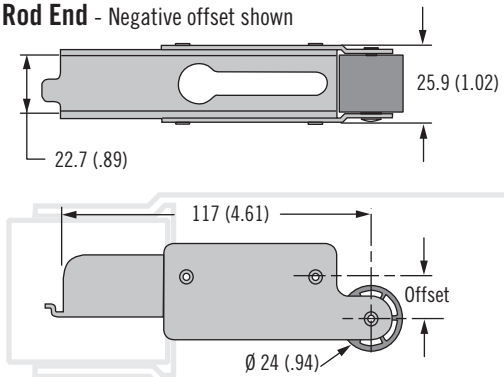


Positive offset shown

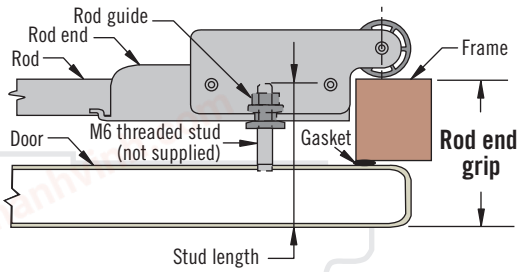


| Rod End Grip when used with 1000 (39.37) rod | Offset | Formula for Stud Length $^{+2.5}_{-0}$ ( $^{+.1}_{-0}$ ) Distance from front of door to the end of the threaded stud (not supplied) | Rod End Part Number |
|---|---|---|---|
| 40 (1.57) Min. to 124 (4.88) Max. | +30 (1.18) | Rod end grip -16.5 (.65) | CR-51-30-24 |
| 25 (.98) Min. to 109 (4.29) Max. | +15 (.59) | Rod end grip -1.5 (.06) | CR-51-15-24 |
| 10 (.39) Min. to 94 (3.70) Max. | 0 (0) | Rod end grip +13.5 (.53) | CR-50-01-24 |
| 5 (.20) Min. to 79 (3.11) Max. | -15 (.59) | Rod end grip +28.5 (1.12) | CR-52-15-24 |
| 5 (.20) Min. to 64 (2.52) Max. | -30 (1.18) | Rod end grip +43.5 (1.71) | CR-52-30-24 |

For your specific application requirement use Southco's online configurator, visit www.southco.com/CR or contact Southco

**Example:**

Rod end grip = 40 (1.57)
Rod end offset = +15 (.59)
**Stud Length** = 40 (1.57) - 1.5 (.06) = 38.5 (1.51)

### Rod

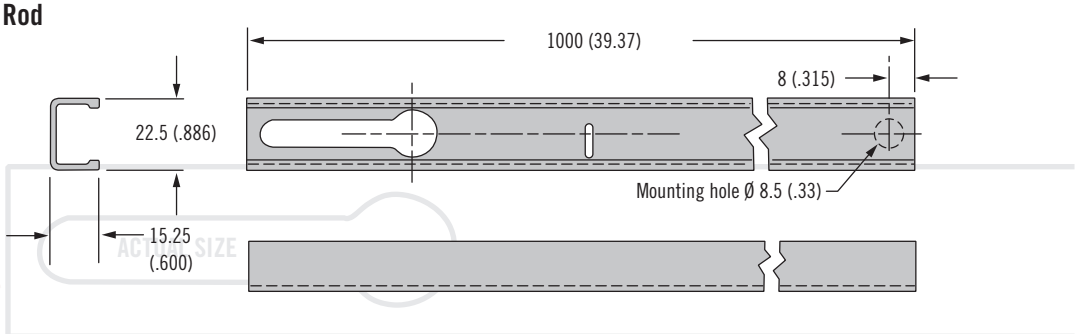


| Rod Part Number |
|---|
| CR-64-1000-50 |

### Rod Guide

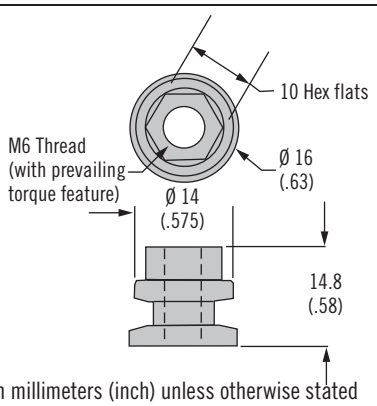


ACTUAL SIZE

| Rod Guide Part Number |
|---|
| CR-843-01-26 |

Dimensions in millimeters (inch) unless otherwise stated



southco®

chanhvinh.com



## Installation

### Single Skin Door
### View From Front

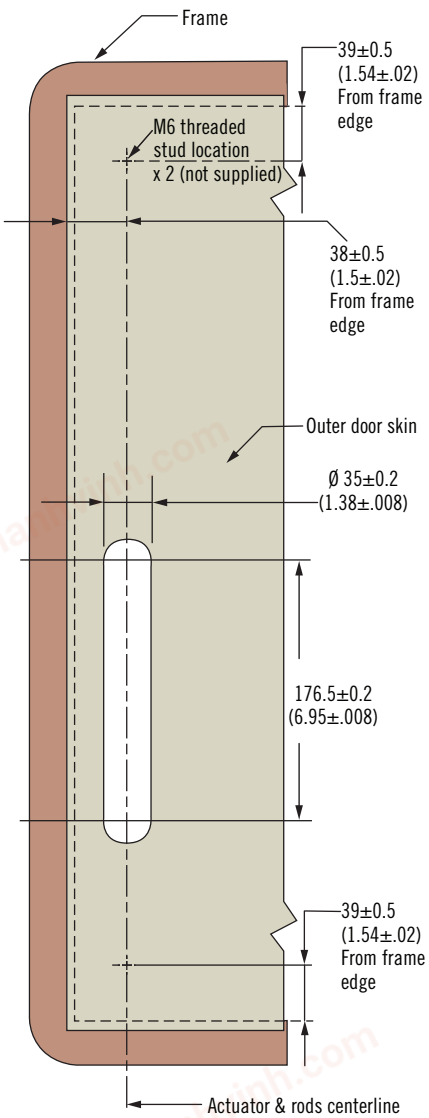


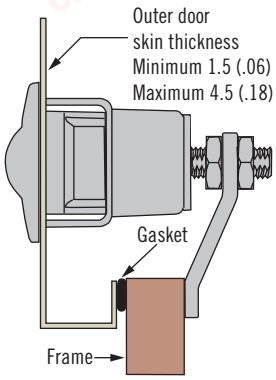


### Double Skin Door
### View From Front

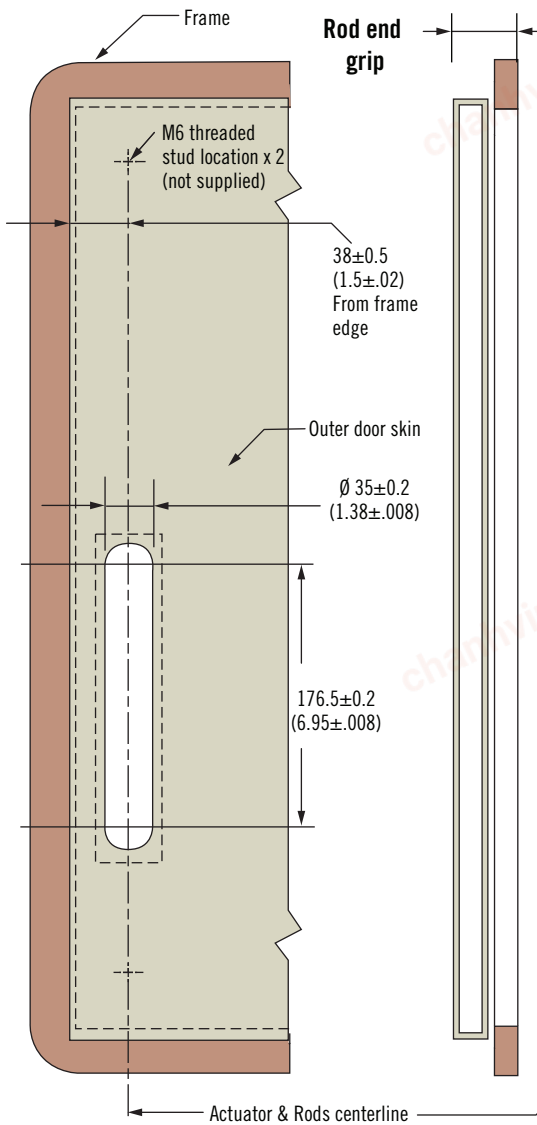


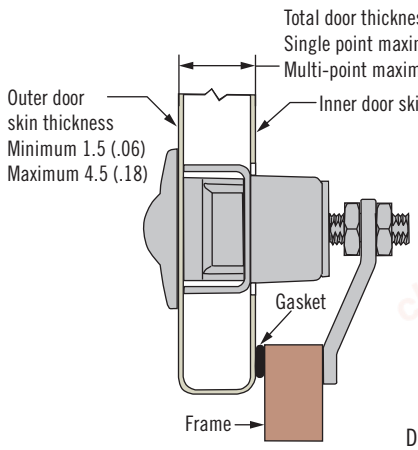


### View From Rear

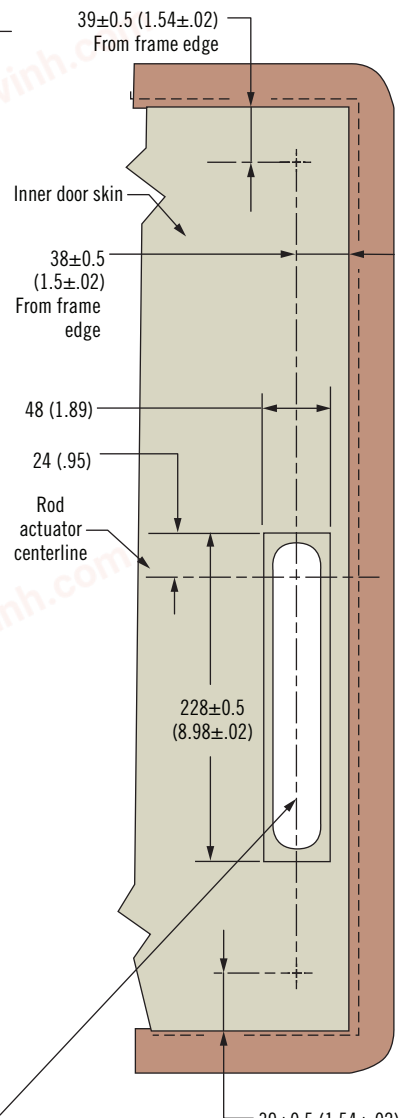


Dimensions in millimeters (inch) unless otherwise stated