chanhvinh.com



97 Draw Latch

Over-center

- **Compact latch**
- **Multiple keeper options for application variances**

Material and Finish

Stainless steel or steel, zinc plated

Performance Details

Clamping force: 135 N (30 lbf)

Installation Notes

Install assembly with M3 (No. 4) round head screws or 3 (.118) rivets (not supplied)

For peg style keeper use M3 (No. 4) flat head screws or rivets

Part Number

See table

Order latch and keeper separately

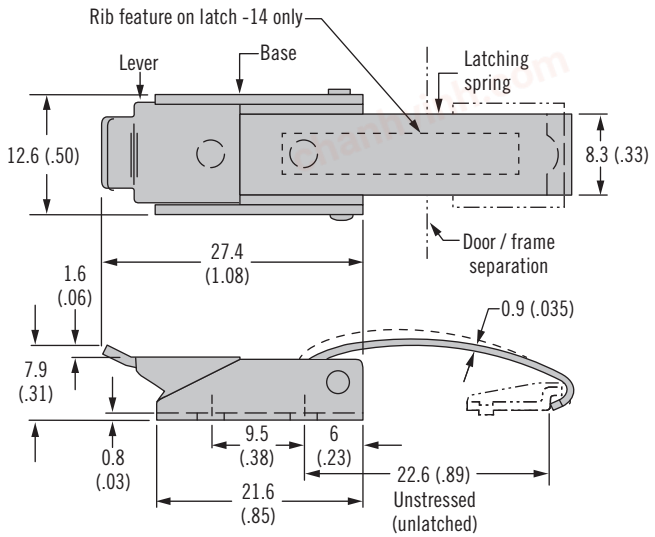

Keepers

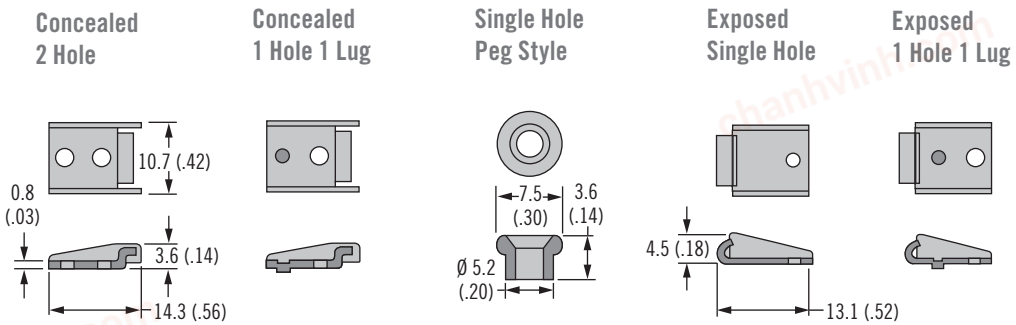

Two Hole Keepers

Single Hole Keepers

Latch Only

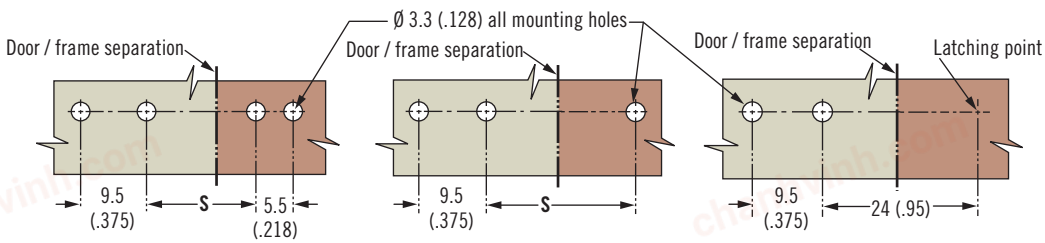

Material	Part Number					
	Latch Only	Keepers				
		Concealed 2 Hole	Concealed 1 Hole 1 Lug	Single Hole Peg Style	Exposed Single Hole	Exposed 1 Hole 1 Lug
Steel	97-30-160-11	97-37-103-11	97-37-101-11	97-37-105-11	97-37-104-11	97-37-102-11
Stainless Steel	97-30-160-12	97-37-103-24	97-37-101-24	97-37-105-24	97-37-104-24	97-37-102-24
	97-30-160-14*					
S Dimension		14.7 (.58)	14.7 (.58)	21.8 (.86)	33 (1.30)	27.4 (1.08)

Dimensions in millimeters (inch) unless otherwise stated

chanhvinh.com

97 Draw Latch

Over-center



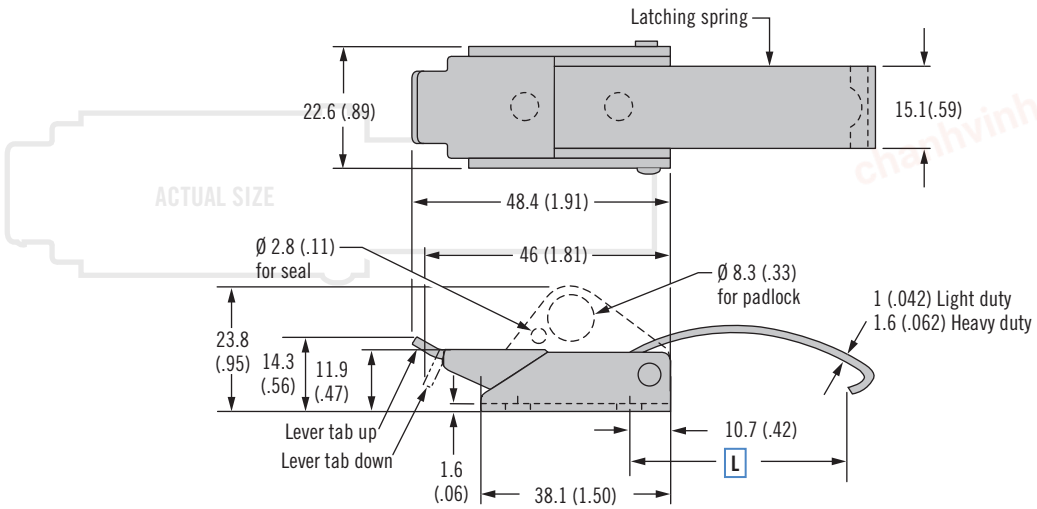

- **Multiple link and keeper options for application variances**
- **Secondary locking style available**

Material and Finish

Stainless steel, steel, zinc plated or steel, black powder coated

Performance Details

Heavy-duty:
Clamping force: 670 N (150 lbf)

Light-duty:
Clamping force: 310 N (70 lbf)

Installation Notes

Install assembly with M4 (No. 8) round head screws or 4 (.156) rivets (not supplied). Peg needs flat head.

Accessories

Spring loaded secondary catch provides resistance against severe vibration and accidental opening.
Part number steel: 97-58-101-11
Part number stainless steel: 97-58-101-25

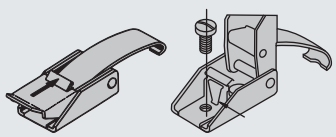

Keepers

Concealed 2 Hole

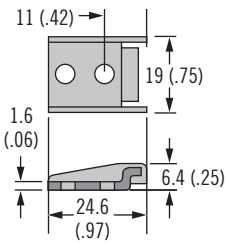

Single Hole Peg Style

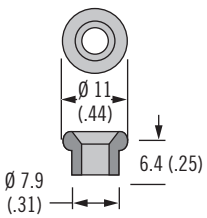

Exposed Single Hole

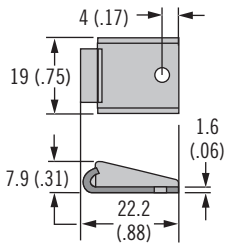

Exposed 1 Hole 1 Lug

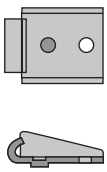

Two Hole Keepers

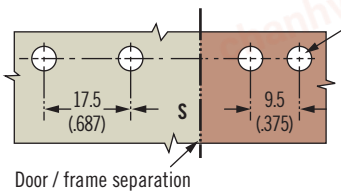

Single Hole Keepers

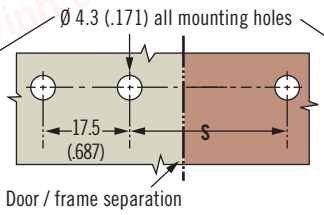

Latch Only

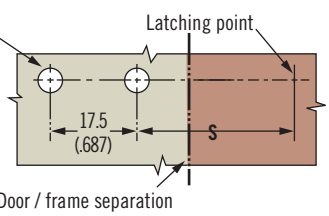

Part Number Selection

Order latch and keeper separately

For latch part number see builder

For keeper part number see table

S Style
1 Lever tab up
2 Lever tab down
3 Padlockable (tab up)

L Latching spring length/thickness
1 Short (light-duty)
2 Medium (light-duty)
3 Long (light-duty)
5 Short (heavy-duty)
6 Medium (heavy-duty)
7 Long (heavy-duty)

97 - 50 - S L 0 - 1 M

Part Number for Latch Only
(No Keeper)

M Material
1 Steel, zinc plated
2 Stainless steel (light-duty only)
5 Steel, black powder coated

Keeper Style	Keeper Part Number		S Dimension		
	Steel	Stainless Steel	Short Link L = 29.4 (1.16)	Medium Link L = 42.1 (1.66)	Long Link L = 54.8 (2.16)
Concealed 2 hole	97-57-103-11	97-57-103-24	15.9 (.63)	28.6 (1.13)	41.3 (1.63)
Single hole peg style	97-57-105-11	97-57-105-24	29.4 (1.16)	42.1 (1.66)	54.8 (2.16)
Exposed single hole	97-57-104-11	97-57-104-24	47.6 (1.88)	60.3 (2.38)	73.0 (2.88)
Exposed 1 hole 1 lug	97-57-102-11	97-57-102-24	38.1 (1.50)	50.8 (2.00)	63.5 (2.50)
Latch only			31.8 (1.25)	44.5 (1.75)	57.1 (2.25)

chanhvinh.com



97 Draw Latch

Over-center

- **Multiple keeper options for application variances**

Material and Finish

Steel, zinc plated or steel powder coated black

Performance Details

Clamping force: 290 N (65 lbf)

Installation Notes

Install assembly with M5 (No. 10) round head screws (not supplied) or 5 (3/16) rivets

For peg style keeper use M5 (No. 10) flat head screws or rivets

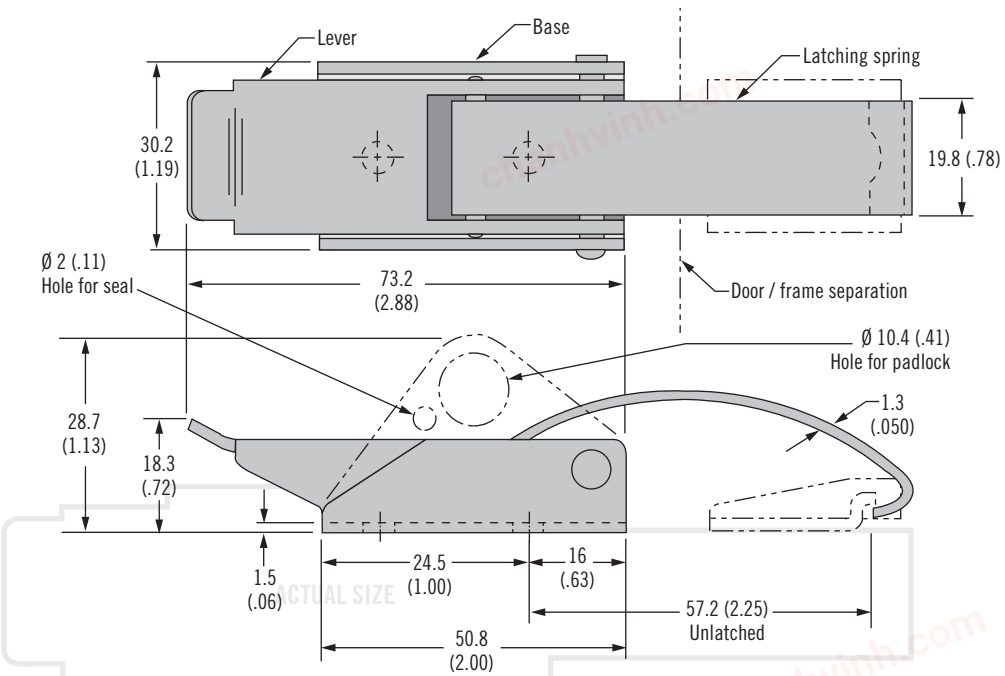

Keepers

Concealed 2 Hole

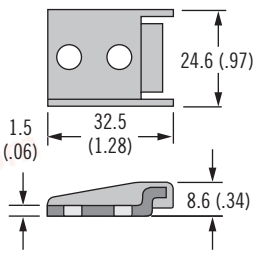

Single Hole Peg Style

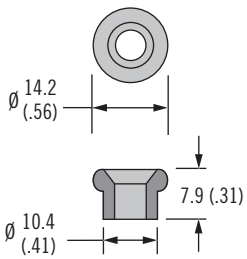

Exposed 1 Hole 1 Lug

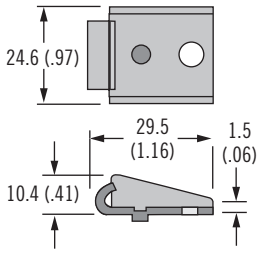

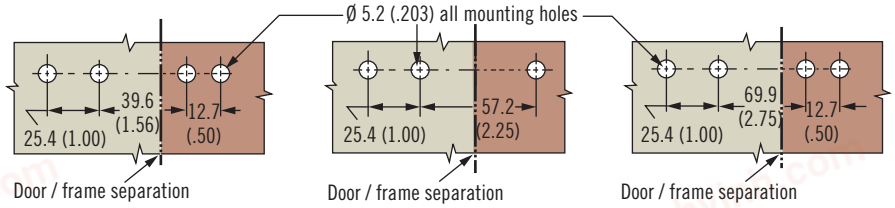

Latch Only

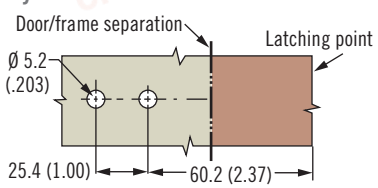

Part Number

See table

Order latch and keeper separately

Material	Latch Part Number	
	Lever Tab Up	Padlockable
Steel, Zinc Plated	97-60-120-11	97-60-320-11
Steel, Black Powder Coated	97-60-120-15	97-60-320-15

Material	Keeper Part Number		
	Concealed 2 Hole	Single Hole Peg Style	Exposed 1 Hole 1 Lug
Steel, Zinc Plated	97-67-103-11	97-67-105-11	97-67-104-11
Steel, Black Powder Coated	97-67-103-15	97-67-105-15	97-67-104-15

Dimensions in millimeters (inch) unless otherwise stated

chanhvinh.com

97 Draw Latch

Over-center



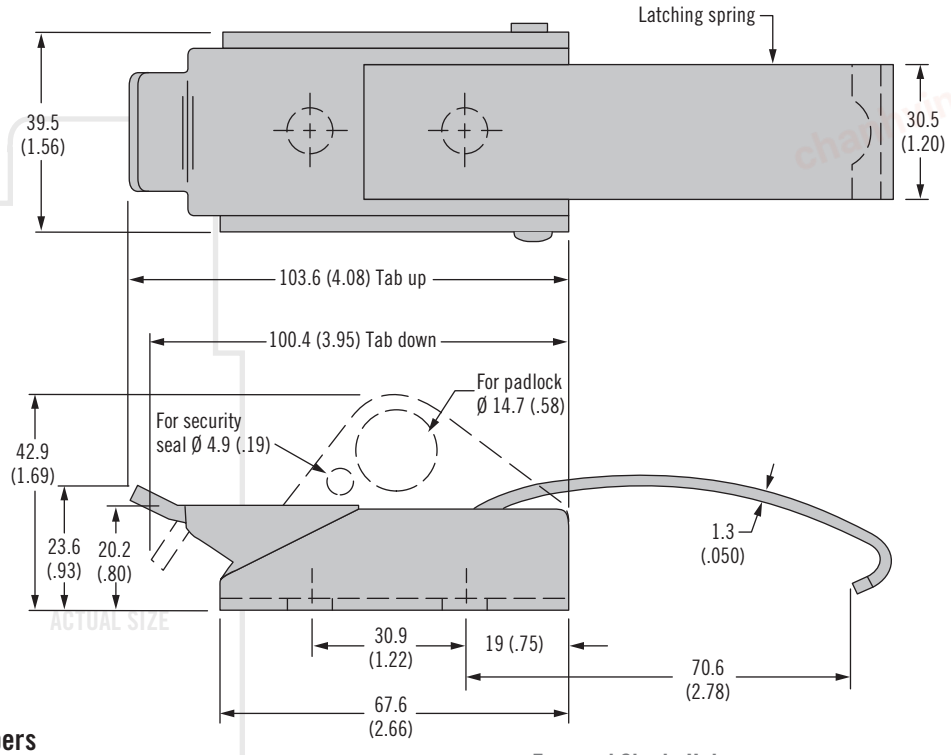

- **Multiple keeper options for application variances**

Material and Finish

Steel, zinc plated

Performance Details

Clamping force: 645 N (145 lbf)

Installation Notes

Install assembly with M6 (1/4) round head screws (not supplied) or 6 (1/4) rivets

Keepers

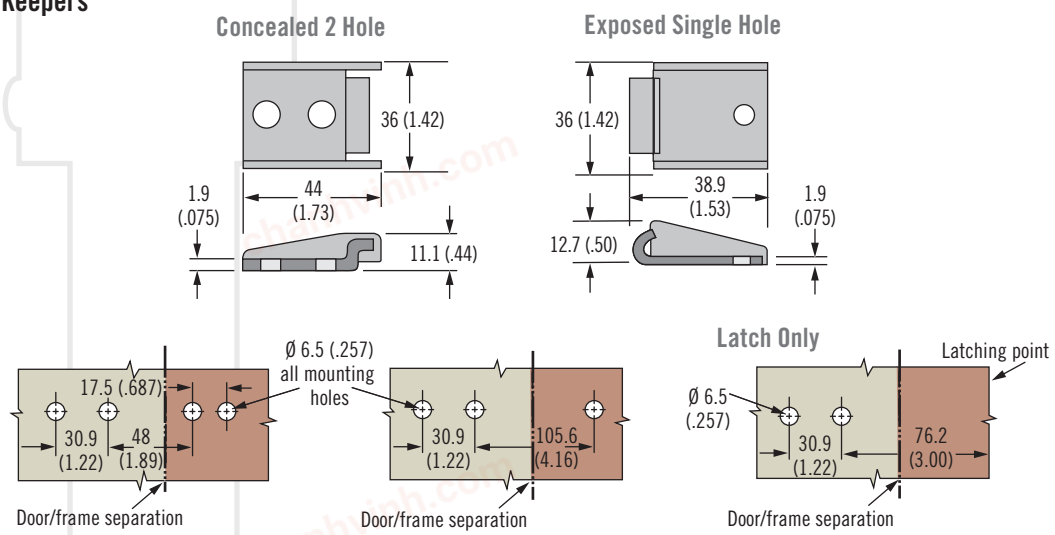

Material	Latch Part Number		
	Lever Tab Up	Lever Tab Down	Padlockable
Steel	97-70-120-11	97-70-220-11	97-70-320-11

Material	Keeper Part Number	
	Concealed 2 Hole	Exposed Single Hole
Steel	97-77-103-11	97-77-104-11

Part Number

See table

Order latch and keeper separately