chanhvinh.com



24 Cam Latch

Flush T-handle · Adjustable grip

- **Concealed mounting type**

Material and Finish

Zinc alloy and steel, zinc plated or stainless steel

Performance Details

Maximum static load:
445 N (100 lbf)

Installation Notes

Maximum tightening torque of mounting nuts not to exceed
2.8 N·m (25 in·lbf)

Keys

See page 120 and 169-175

Other options available. For complete details on variety, part numbers, installation and specification, go to

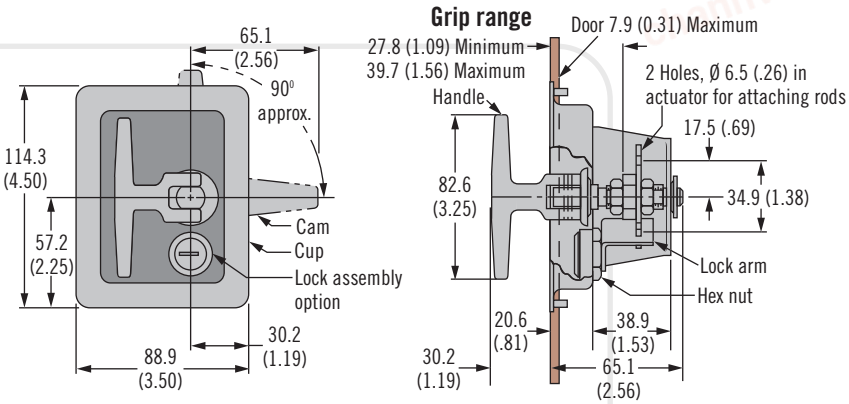

Style	Part Number	
	With Mounting Studs	
	Cup and bracket polished stainless steel. Handle zinc chrome plated	Cup and bracket steel dacrotized. Handle zinc dacrotized
Locking keyed alike CH751 supplied	24-20-812-35	24-20-812-10
Non-locking	24-20-302-35	24-20-302-10
Non-locking environmentally sealed	24-20-312-35	24-20-312-10



69 Cam Latch

Arrowhead · Detent design · Adjustable grip

- **Arrow indicates cam orientation**
- **Single hole installation**
- **Detented design**
- **Adjustable grip**

Material and Finish

Nylon and steel, zinc plated

Performance Details

Small size working load:
44 N (10 lbf)
Medium size working load:
220 N (50 lbf)
Large size working load:
330 N (75 lbf)

Other options available. For complete details on variety, part numbers, installation and specification, go to

www.southco.com/69

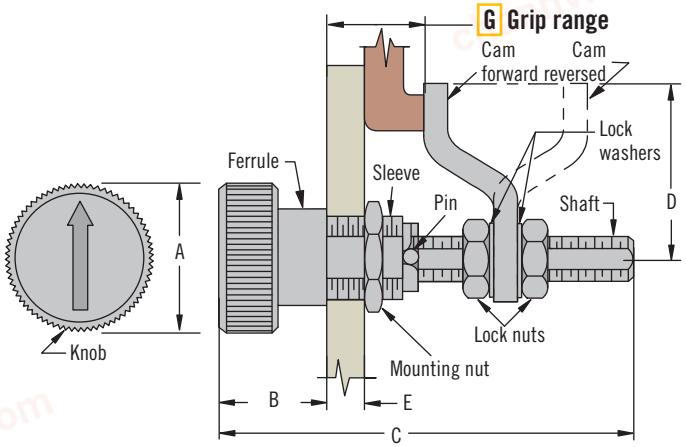

Size	Part Number	G Grip Range		A	B	C	D	E
		Minimum	Maximum					
Small	69-10-301-11	4 (.16)	28.2 (1.11)	12.7 (.50)	12.7 (.50) Max.	38.1 (1.50)	13.5 (.53)	4.75 (.188)
Medium	69-10-401-11	3.2 (.13)	33.3 (.13)	19.1 (.75)	17.5 (.69) Max.	47.5 (1.87))	15.9 (.63)	6.35 (.25)
Large	69-10-501-11	4.8 (.19)	61.9 (2.44)	28.6 (1.13)	25.4 (1) Max.	79.2 (3.12)	34.1 (1.34)	12.7 (.50)

Dimensions in millimeters (inch) unless otherwise stated