chanhvinh.com

Stopper Cylinder

Ø 12, Ø 16, Ø 20, Ø 32, Ø 40, Ø 50

New

RoHS

Additional variations now include the option to have a female rod end on the “**round bar type**” and the “**chamfered type**”.

8 types → 10 types



The new body allows for auto switch mounting on 4 faces.

Mounting brackets are not required.
Compact auto switches are mountable.

Solid state auto switch D-M9□	Reed auto switch D-A9□	Magnetic field-resistant auto switch D-P3DWA
		



RSQ Series

SMC

CAT.EUS20-254A-UK

chanhvinh.com

Various rod end configurations

Shape can be selected to suit the intended application.

— Round Bar

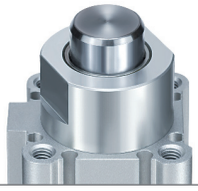

F Round Bar with Female Rod End

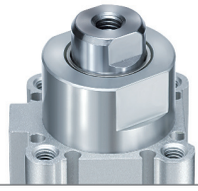

K Chamfered



G Chamfered with Female Rod End



R Roller

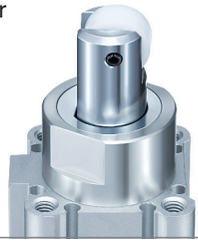

L Lever (Fixed Absorber Type)



B Lever (Adjustable Absorber Type)



C Lever (Adjustable Absorber Type) with Cancel Cap

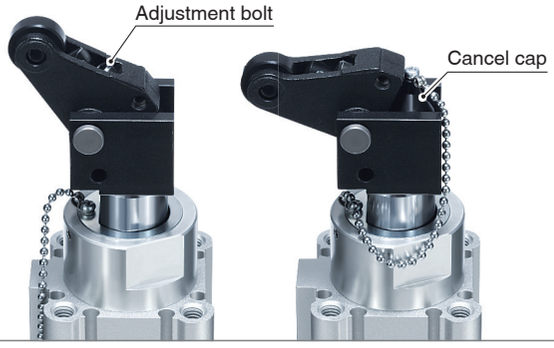

D Lever (Adjustable Absorber Type) with Lock Mechanism

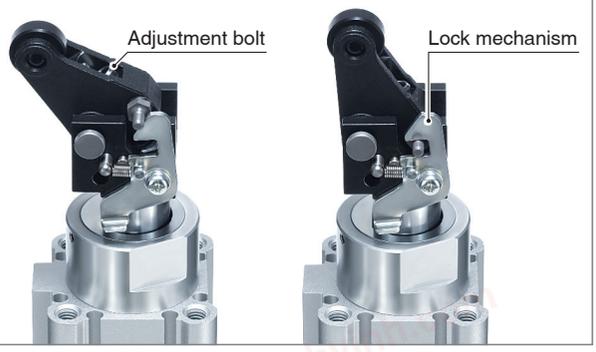

E Lever (Adjustable Absorber Type) with Lock Mechanism and Cancel Cap

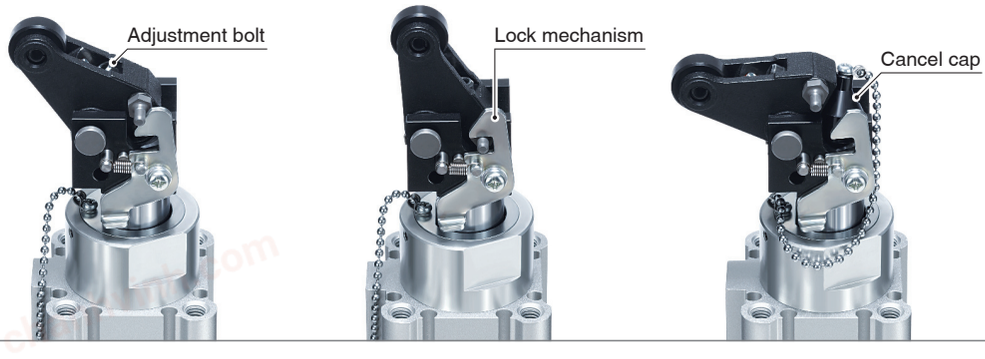

chanhvinh.com

Lever type rod end selected according to applications

With lock mechanism Prevention of repulsion by light pallets

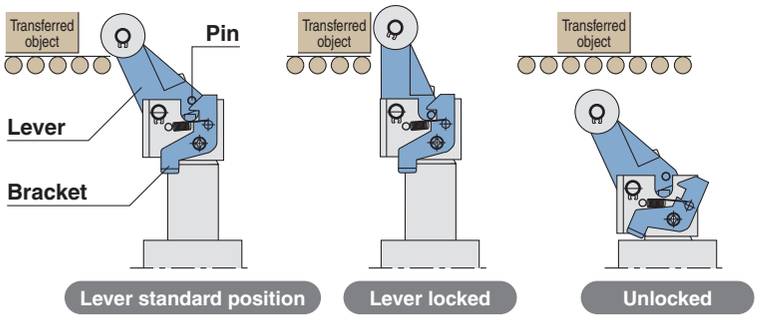

With cancel cap Partial passing of workpiece

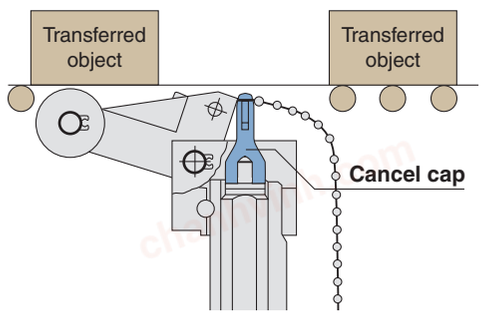

Easy replacement of shock absorbers

- Easy replacement of shock absorbers (Ø 32, Ø 40, Ø 50)
- Replaceable just by loosening the set screw

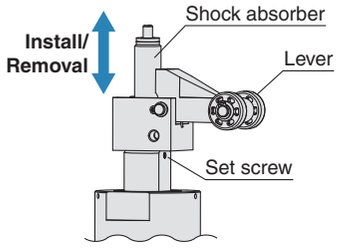

Three types of mounting

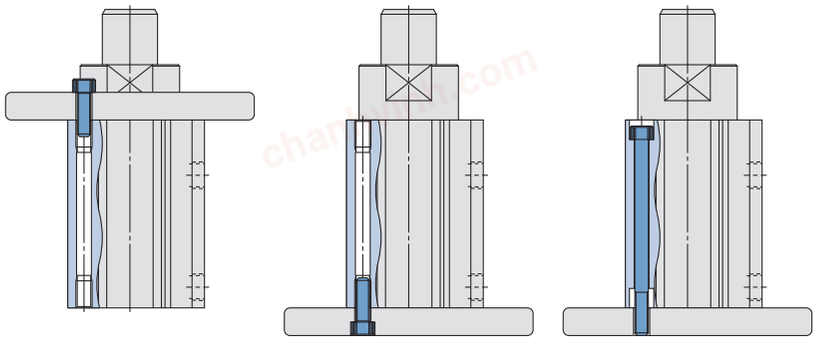

Rod end tapped | Head end tapped | Through-hole

Series Variations

Mounting	Action	Rod end configuration		Standard variations: Built-in magnet	With lock mechanism	With cancel cap	Built-in One-touch fittings
Through-hole Both ends tapped	Double acting Double acting with spring loaded Single acting / spring extend	Round bar		●			●
		Roller		●			●
		Chamfered		●			●
		Lever	Fixed	●	●	●	●
			Adjustable	●	●	●	●

Bore size [mm]	Standard stroke [mm] 10	15	20	25	30
12	●				
16	●	●			
20	●	●	●		
32	●	●	●		
40			●	●	●
50			●	●	●

chanhvinh.com

CONTENTS

Stopper Cylinder *RSQ Series*

■ **Model Selection** ····· p. 4

■ **How to Order** ····· p. 5

■ **Specifications** ····· p. 6

■ **Weight** ····· p. 7

■ **Construction** ····· p. 8

■ **Dimensions**



Rod End Configuration

Round Bar ····· p. 10



Rod End Configuration

Chamfered (Non-rotating Piston Rod) ····· p. 11



Rod End Configuration

Roller ····· p. 12



Rod End Configuration

Lever (Fixed Absorber Type) ····· p. 13



Rod End Configuration

Lever (Adjustable Absorber Type) ····· p. 14



Rod End Configuration

Lever (Adjustable Absorber Type)
with Lock Mechanism ····· p. 15

■ **Auto Switch Mounting** ····· p. 16

■ **Simple Specials** ····· p. 21

■ **Made to Order Common Specifications** ····· p. 21-1

■ **Specific Product Precautions** ····· p. 23

■ **Safety Instructions** ····· Back Cover

chanhvinh.com

RSQ Series
Model Selection

Operating Range

Example 1 **Transfer speed: 15 m/min**
Weight of transferred object: 30 kg
Rod end configuration: Roller

<Selection method>
Find the intersection of the transfer speed of 30 kg on the vertical axis in graph 1, and select the **RSQ□ 40 - □□RZ** that falls in the cylinder operating range.

Graph 1
Round Bar/Chamfered/Roller

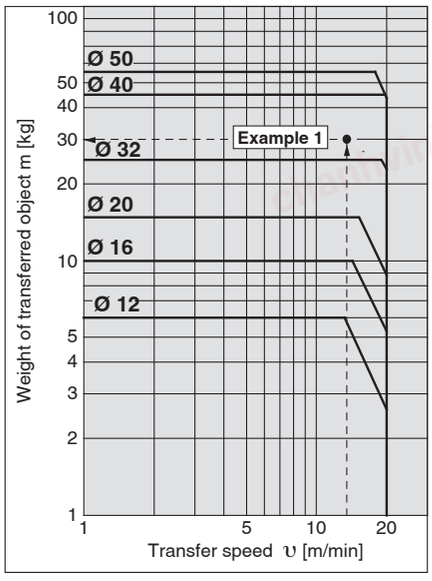

Example 2 **Transfer speed: 15 m/min**
Weight of transferred object: 60 kg
Friction coefficient μ = 0.1
Rod end configuration: Lever

<Selection method>
Find the intersection of the transfer speed of 15 m/min on the horizontal axis and the weight of the transferred object of 60 kg on the vertical axis in graph 2, and select the **RSQ□ 40 - □□LZ** that falls in the cylinder operating range.

Graph 2
Lever

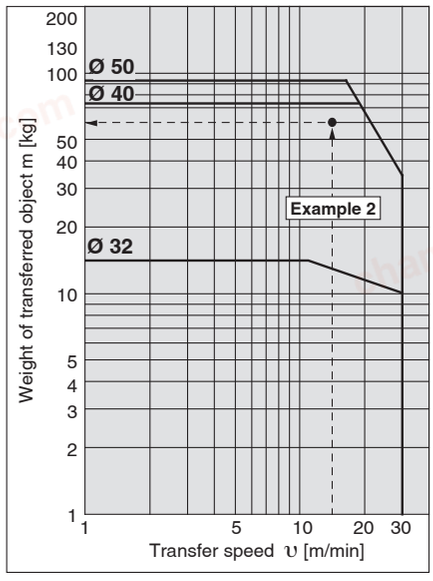

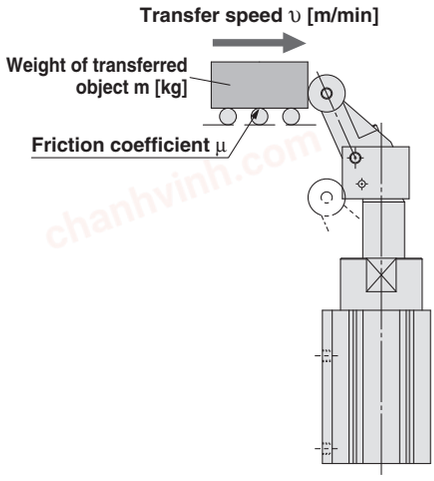

* Graph 2 shows the case of a Lever Type with a friction coefficient μ = 0.1 and at room temperature (20 to 25°C).
* When selecting cylinders, confirm the Specific Product Precautions as well.

Lateral Load and Operating Pressure

The larger the lateral load, the higher the operating pressure required for the stopper cylinder. Set the operating pressure using the graphs shown on the right as a guide.
(Applicable to round bar, chamfered, roller type rod end configurations.)

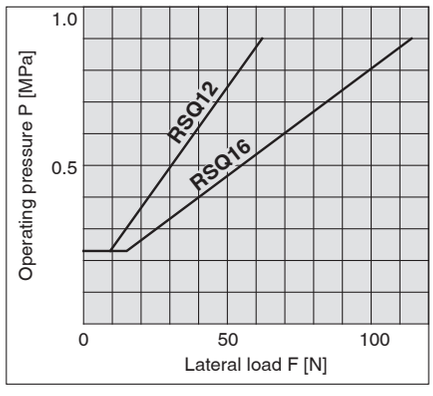

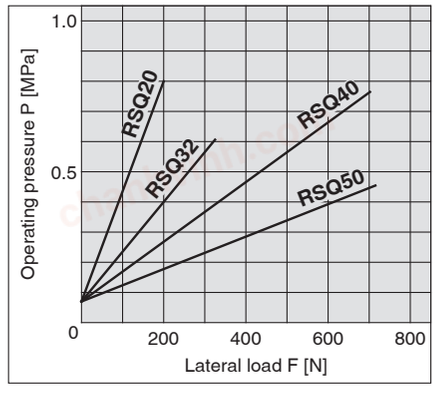

chanhvinh.com

Stopper Cylinder
Fixed Mounting Height
RSQ Series
Ø 12, Ø 16, Ø 20, Ø 32, Ø 40, Ø 50

RoHS

How to Order

Ø 12: RS D Q B 12 – 10 D □ – L – M9BW □ – □

Ø 16 to Ø 50: RS D Q B 20 □ – 15 D □ Z – L – M9BW □ – □

❶ ❷ ❸ ❹ ❺ ❻ ❼ ❽ ❾ ❿ ⓫

❶ With auto switch

—	Without magnet for switch*1
D	With auto switch (Built-in magnet)

*1 In the case of without magnet for switch, auto switch cannot be mounted.

❷ Mounting

B	Through-hole
A	Both ends tapped

* Since Ø 12 uses a common tube for both A and B, only B is used for part no. denotation.

❸ Bore size

12	12 mm
16	16 mm
20	20 mm
32	32 mm
40	40 mm
50	50 mm

❹ Port thread type

—	M thread	Ø 12, Ø 16
	Rc	Ø 20 to Ø 50
TN	NPT	
TF	G	
F	Built-in One-touch fittings*2	

*2 Bore sizes available w/ One-touch fittings are Ø 20 to Ø 50.
* TF for Ø 20 indicates M5.

❺ Cylinder stroke [mm]

12	10
16	10, 15
20	10, 15, 20
32	10, 15, 20
40	20, 25, 30
50	20, 25, 30

❻ Action

D	Double acting
B	Double acting with spring loaded
T	Single acting / spring extend

❼ Rod end configuration

—	Round bar
F	Round bar with female rod end*3
K	Chamfered
G	Chamfered with female rod end*3
R	Roller
L	Lever (Fixed absorber type)
B	Lever (Adjustable absorber type)
C	Lever (Adjustable absorber type) with cancel cap
D	Lever (Adjustable absorber type) with lock mechanism
E	Lever (Adjustable absorber type) with lock mechanism and cancel cap

* The lever type rod end is applicable only to bore sizes Ø 32, Ø 40, and Ø 50.
*3 Excluding Ø 12

❽ Mounting bolt

—	None
L	Shipped together

* Mounting bolt is shipped together only when the "Mounting" symbol is B. For details about the mounting bolt sizes, refer to page 7.

❾ Auto switch

—	Without auto switch

* For applicable auto switches, refer to the table below.

❿ Number of auto switches

—	2
S	1

⓫ Made to order

For details, refer to the next page.

Applicable Auto Switches/Refer to the **Web Catalogue** for further information on auto switches.

Type	Special function	Electrical entry	Indicator light	Wiring (Output)	Load voltage DC	Load voltage DC	Load voltage AC	Auto switch model Perpendicular	Auto switch model In-line	Lead wire length [m] 0.5 (—)	1 (M)	3 (L)	5 (Z)	None (N)	Pre-wired connector	Applicable load	
Solid state auto switch	——	Grommet	Yes	3-wire (NPN)	24 V	5 V, 12 V	—	M9NV	M9N	●	●	●	○	—	○	IC circuit	Relay, PLC
				3-wire (PNP)				M9PV	M9P	●	●	●	○	—	○		
				2-wire		12 V		M9BV	M9B	●	●	●	○	—	○	—	
	Diagnostic indication (2-colour indicator)			3-wire (NPN)		5 V, 12 V		M9NWV	M9NW	●	●	●	○	—	○	IC circuit	
				3-wire (PNP)				M9PWV	M9PW	●	●	●	○	—	○		
				2-wire		12 V		M9BWV	M9BW	●	●	●	○	—	○	—	
	Water-resistant (2-colour indicator)			3-wire (NPN)		5 V, 12 V		M9NAV*1	M9NA*1	○	○	●	○	—	○	IC circuit	
				3-wire (PNP)				M9PAV*1	M9PA*1	○	○	●	○	—	○		
				2-wire		12 V		M9BAV*1	M9BA*1	○	○	●	○	—	○	—	
	Magnetic field-resistant (2-colour indicator)			2-wire (Non-polar)		—		—	P3DWA	●	—	●	●	—	○		
Reed auto switch	——	Grommet	Yes	3-wire (NPN equivalent)	—	5 V	—	A96V	A96	●	—	●	—	—	—	IC circuit	—
			No	2-wire	24 V	12 V	100 V	A93V*2	A93	●	●	●	●	—	—	—	Relay, PLC
						5 V,12 V	100 V or less	A90V	A90	●	—	●	—	—	—	IC circuit	

*1 Water-resistant type auto switches can be mounted on the above models, but SMC cannot guarantee water resistance. Please contact SMC regarding water-resistant types with the above model numbers.
*2 The 1 m lead wire is only applicable to the D-A93.

* Lead wire length symbols: 0.5 m ····· — (Example) M9NW
1 m ····· M (Example) M9NWM
3 m ····· L (Example) M9NWL
5 m ····· Z (Example) M9NWZ

* Solid state auto switches marked with "○" are produced upon receipt of order.
* The D-P3DWA□ is mountable on bore size Ø 32 to Ø 50.

* Since there are applicable auto switches other than those listed above, refer to page 19 for details.

chanhvinh.com



Specifications

Bore size [mm]	12	16	20	32	40	50
Action	Double acting, Double acting with spring loaded, Single acting / spring extend					
Fluid	Air					
Proof pressure	1.5 MPa					
Maximum operating pressure	1.0 MPa					
Ambient and fluid temperatures	Without auto switch: –10 °C to 70 °C With auto switch: –10 °C to 60 °C (No freezing)					
Lubricant	Not required (Non-lube)					
Cushion	Rubber bumper					
Stroke length tolerance	$^{+1.4}_{0}$ *1					
Piston speed	50 to 500 mm/s					
Mounting	Through-hole, Both ends tapped					

*1 Stroke length tolerance does not include the amount of bumper change.

Standard Strokes

[mm]

Bore size	Rod end configuration	
	Round bar, Chamfered, Roller	Lever
12	10	—
16	10, 15	—
20	10, 15, 20	—
32		10, 15, 20
40	20, 25, 30	20, 25, 30
50		

Spring Force (Single acting / spring extend)

[N]

Bore size [mm]	Extended	Compressed
12	3.9	9.6
16	4.9	14.9
20	3.4	14.9
32	8.8	18.6
40, 50	13.7	27.5

* Applicable only to round bar, chamfered, and roller type rod end configurations.

Made to Order

Made to Order Common Specifications

(For details, refer to pages 21 and 22.)

Symbol	Specifications
-XA□	Change of rod end shape
-XB11	Long stroke type*1
-XC3	Special port location

*1 Double acting, Round bar type only.

For details on the water-resistant cylinder and the series compatible with secondary batteries (25A-), refer to the **Web Catalogue**.

For details of cylinders **with auto switches** ⇨ pages 16 to 19

- Auto Switch Proper Mounting Position (Detection at stroke end) and Mounting Height
- Operating Range
- Auto Switch Mounting Brackets/Part Nos.

chanhvinh.com

RSQ Series

Type

Bore size [mm]		12	16	20	32	40	50
Mounting	Through-hole	●*1	●	●	●	●	●
	Both ends tapped	●	●	●	●	●	●
Built-in magnet			●	●	●	●	●
Piping	Screw-in	M5 x 0.8		1/8*2			
	Built-in One-touch fittings	—		Ø 6/4			Ø 8/6
Action		Double acting, Double acting with spring loaded, Single acting / spring extend					
Rod end configuration	Round bar	●					
	Chamfered	●					
	Roller	●					
	Lever	—			●		

*1 Ø 12 tubes can have both through-hole and tap mountings in the same tube.
*2 TF (G thread) for Ø 20 indicates M5 x 0.8.

Weight

[kg]

Action	Bore size [mm]	Rod end configuration	Cylinder stroke [mm]				
			10	15	20	25	30
Double acting	12	Round bar, Chamfered, Roller	0.07	—	—	—	—
	16	Round bar, Chamfered, Roller	0.13	0.14	—	—	—
	20	Round bar, Chamfered, Roller	0.22	0.23	0.24	—	—
Double acting with spring loaded	32	Round bar, Chamfered, Roller	0.41	0.43	0.45	—	—
		Lever	0.50	0.52	0.54	—	—
Single acting / spring extend	40	Round bar, Chamfered, Roller	—	—	0.73	0.79	0.85
		Lever	—	—	0.96	1.00	1.04
	50	Round bar, Chamfered, Roller	—	—	0.98	1.02	1.06
		Lever	—	—	1.21	1.25	1.29

Mounting Bolt for RSQB

Mounting bolts for the RSQB are available. Refer to the following mounting bolt part numbers.
Order the actual number of bolts that will be used.

Example) CQ-M3X55L 2 pcs.

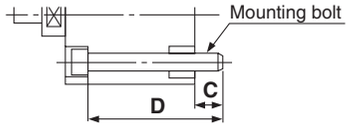

[mm]

Cylinder model	C	D	Mounting bolt part no.
*1**RSQB12-10**□	5	45	CQ-M3X45L
RSQB16-10□	7.5	55	CQ-M3X55L
-15□		60	X60L
RSQB20-10□	7	55	CQ-M5X55L
-15□		60	X60L
-20□		65	X65L
RSQB32-10□	9	60	CQ-M5X60L
-15□		65	X65L
-20□		70	X70L
RSQB40-20□	9.5	75	CQ-M5X75L
-25□		80	CQ-M5X80L
-30□		85	X85L
RSQB50-20□	9	75	CQ-M6X75L
-25□		80	X80L
-30□		85	X85L

*1 Be sure to use the attached flat washers when mounting Ø 12 cylinders with through-holes.

chanhvinh.com

Construction

Double acting (D)

Rod end configuration: Roller (R)

Ø 12

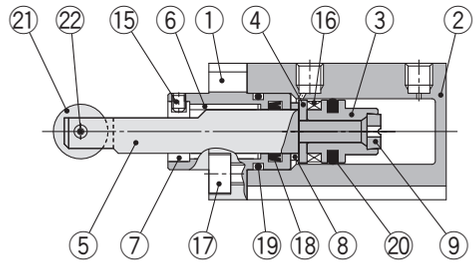

Ø 16

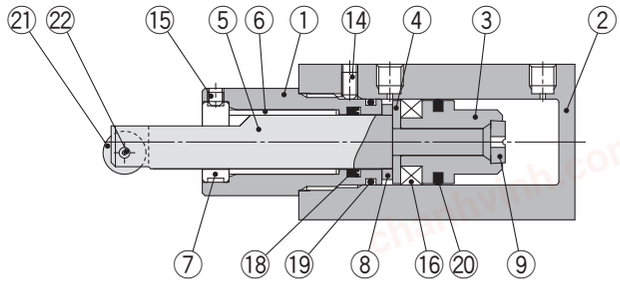

Ø 20

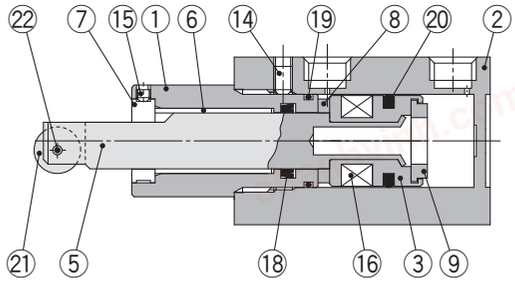

Ø 32, Ø 40, Ø 50

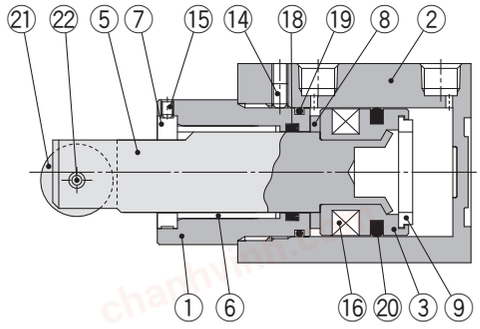

Double acting with spring loaded (B)

Ø 12, Ø 16

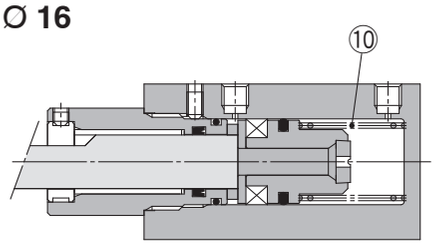

Ø 20, Ø 32, Ø 40, Ø 50

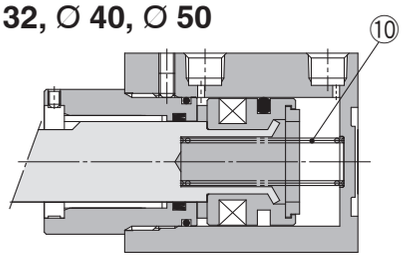

Single acting / spring extend (T)

Ø 12, Ø 16

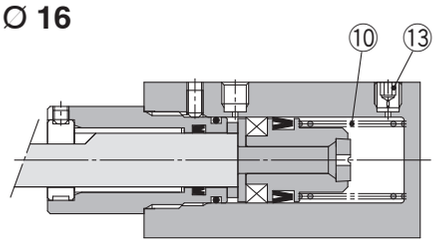

Ø 20, Ø 32, Ø 40, Ø 50

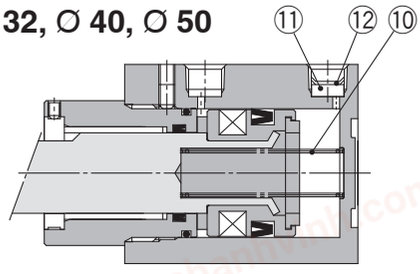

Component Parts

No.	Description	Material	Note
1	**Rod cover**	Aluminium alloy	Anodised
2	**Cylinder tube**	Aluminium alloy	Hard anodised
3	**Piston**	Aluminium alloy	
4	**Spacer for switch**	Aluminium alloy	Ø 12, Ø 16 only
5	**Piston rod**	Ø 12, Ø 16, Ø 20: Stainless steel Ø 32, Ø 40, Ø 50: Carbon steel	Hard chrome plating
6	**Bushing**	Bearing alloy	
7	**Non-rotating guide**	Rolled steel	Non-rotating type only Excluding the round bar type rod end
8	**Bumper A**	Urethane	
9	**Bumper B**	Urethane	
10	**Return spring**	Steel wire	Zinc chromated (Excluding double acting)
11	**Element**	Sintered metallic BC	Ø 20 to Ø 50 only (Single acting only)

No.	Description	Material	Note
12	**Retaining ring**	Carbon tool steel	Ø 20 to Ø 50 only (Single acting only)
13	**Plug with fixed orifice**	Alloy steel	Ø 12, Ø 16 only (Single acting only)
14	**Hexagon socket head set screw**	Chromium molybdenum steel	Excluding Ø 12
15	**Hexagon socket head set screw**	Chromium molybdenum steel	Non-rotating type only Excluding the round bar type rod end
16	**Magnet**	—	
17	**Hexagon socket head cap screw**	Alloy steel	Ø 12 only
18	**Rod seal**	NBR	
19	**Gasket**	NBR	
20	**Piston seal**	NBR	
21	**Roller A**	Resin	
22	**Spring pin**	Carbon tool steel	

chanhvinh.com

Construction

Rod end configuration:

Round bar (—)

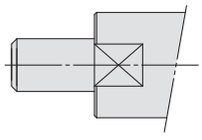

Round bar with female thread (F)

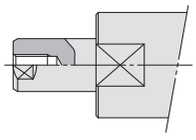

Chamfered (K)

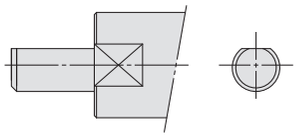

Chamfered with female thread (G)

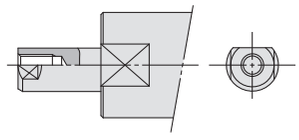

Lever (Fixed absorber type)
(Ø 32, Ø 40, Ø 50 only)

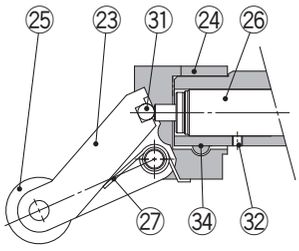

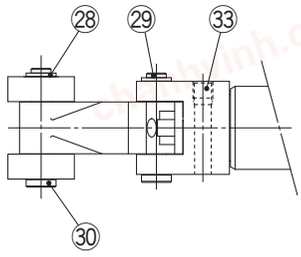

Only one roller is provided for Ø 32.

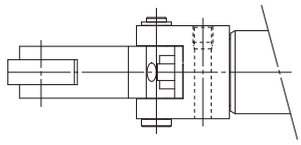

Lever (Adjustable absorber type)
(Ø 32, Ø 40, Ø 50 only)

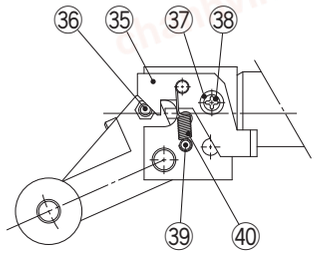

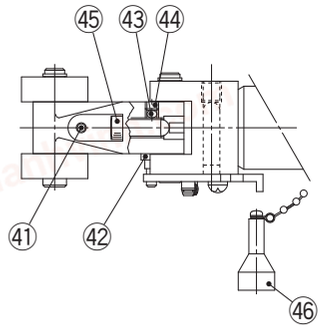

Component Parts

No.	Description	Material	Note
23	**Lever**	Cast iron	
24	**Lever holder**	Rolled steel	
25	**Roller B**	Resin	
26	**Shock absorber**	—	
27	**Lever spring**	Stainless steel wire	
28	**C retaining ring for axis**	Carbon tool steel	
29	**Lever pin**	Carbon steel	
30	**Roller pin**	Carbon steel	
31	**Steel ball**	High carbon chrome bearing steel	
32	**Hexagon socket head set screw**	Chromium molybdenum steel	
33	**Hexagon socket head set screw**	Chromium molybdenum steel	
34	**One-side tapered pin**	Carbon steel	

No.	Description	Material	Note
35	**Bracket**	Carbon steel	
36	**Pin B**	Carbon steel	
37	**Spacer**	Carbon steel	
38	**Cross recessed round head screw**	Rolled steel	
39	**Pin A**	Rolled steel	
40	**Bracket spring**	Steel wire	
41	**Hexagon socket head set screw**	Chromium molybdenum steel	
42	**Spring washer**	Steel wire	
43	**Urethane ball**	Urethane	
44	**Hexagon socket head set screw**	Chromium molybdenum steel	
45	**Adjustment bolt**	Bearing steel	
46	**Cancel cap**	Aluminium alloy	

Replacement Parts: Seal Kit

Bore size [mm]	Kit no.			Contents
	Double acting	Double acting with spring loaded	Single acting / spring extend	
12	RSQ12D-PS	RSQ12T-PS		Set of nos. ⑱, ⑲, ⑳ on page 8
16	RSQ16D-PS	RSQ16B-PS	RSQ16T-PS	
20	RSQ20D-PS	RSQ20B-PS	RSQ20T-PS	
32	RSQ32D-PS	RSQ32B-PS	RSQ32T-PS	
40	RSQ40D-PS	RSQ40B-PS	RSQ40T-PS	
50	RSQ50D-PS	RSQ50B-PS	RSQ50T-PS	

∗ The seal kit includes ⑱, ⑲, and ⑳. Order the seal kit based on each bore size.
∗ The seal kit does not include a grease pack. Order it separately.
Grease pack part number: GR-S-010 (10 g)

Replacement Parts: Shock Absorber

Bore size [mm]	Kit no.
32	RB1007-X225
40, 50	RB1407-X552

chanhvinh.com



Dimensions

These 5 figures show the piston rod extended.
The dimensions of the double acting type with spring loaded, and single acting/ spring extend type are the same as those of the double acting type.

Rod end configuration: Round bar, Mounting: Through-hole

Bore size: Ø 12 **RS□QB12-10D (Double acting)**

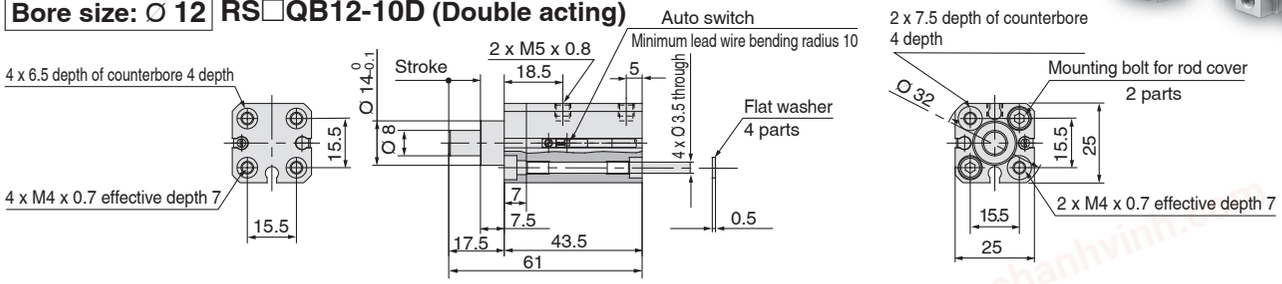

Bore size: Ø 16, Ø 20 **RS□QB$^{16}_{20}$□-□DZ (Double acting)**

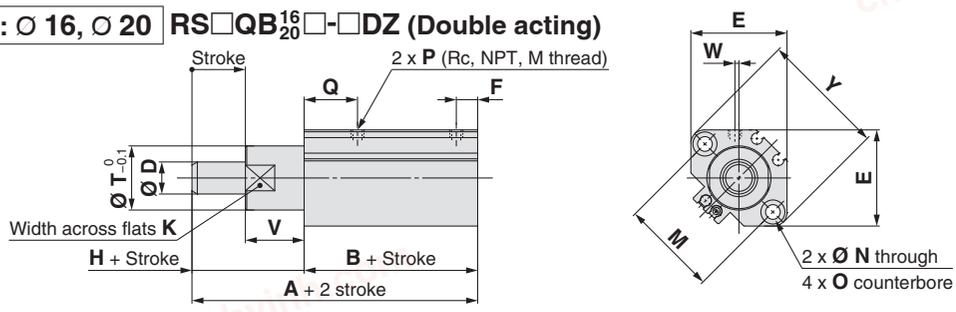

Bore size: Ø 32, Ø 40, Ø 50 **RS□QB$^{32}_{40}_{50}$□-□DZ (Double acting)**

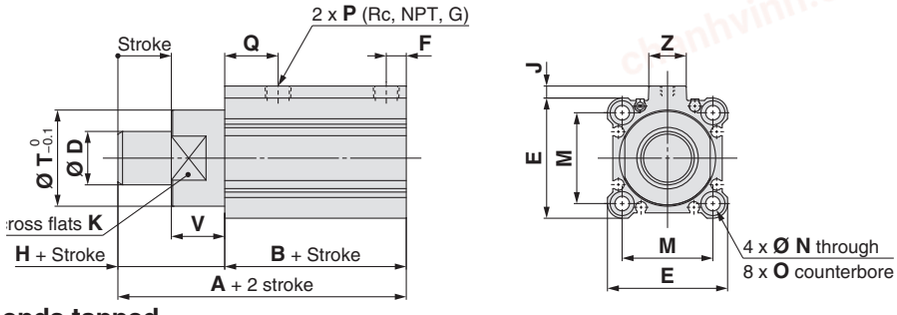

Mounting: Both ends tapped
RS□QA

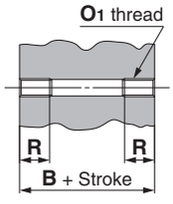

[mm]

Bore size	B	O1	R
16	41.5	M4 x 0.7	7
20	45	M6 x 1	10
32	48	M6 x 1	10
40	52.5	M6 x 1	10
50	54	M8 x 1.25	14

∗ Dimensions other than those shown above are the same as the drawings above.

Female rod end

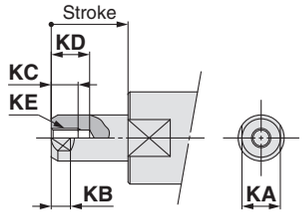

[mm]

Bore size	KA	KB	KC	KD	KE
16	8	4.5	8	10.5	M4 x 0.7
20	10	5	7	10	M5 x 0.8
32	17	7.5	13	16.5	M8 x 1.25
40	22	9.5	13	16.5	M8 x 1.25
50	22	9.5	13	16.5	M8 x 1.25

Built-in One-touch fittings (Ø 20 to Ø 50)

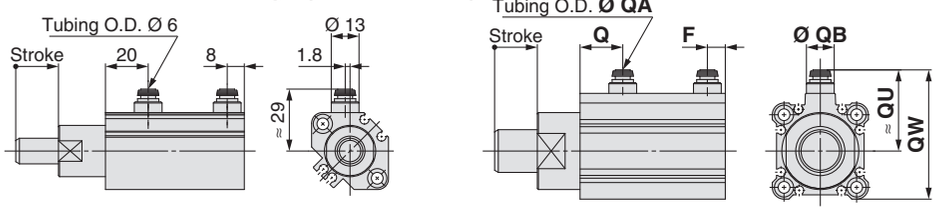

[mm]

Bore size	QA	F	Q	QB	QU	QW
32	6	7.5	20	13	38	60.5
40	6	8	24.5	13	42	68
50	8	9.5	26	16	50	82

Ø 20 **Ø 32 to Ø 50**

[mm]

Bore size	A	B	D	E	F	H	J	K	M	N	O	P			Q	T	V	Y	Z	W		
												Rc	NPT	G						Rc	NPT	G
16	59.5	41.5	10	29	6	18	—	18	28	3.5	6.5 depth 4	M5 x 0.8	M5 x 0.8	M5 x 0.8	17	20	18	37	—	0	0	0
20	67	45	12	36	8	22	—	22	36	5.5	9 depth 7	1/8	1/8	M5 x 0.8	20	24	22	47	—	1.5	1.5	0
32	68	48	20	45	7.5	20	4.5	32	34	5.5	9 depth 7	1/8	1/8	1/8	20	36	20	—	14	—	—	—
40	80.5	52.5	25	52	8	28	5	41	40	5.5	9 depth 7	1/8	1/8	1/8	24.5	44	28	—	15	—	—	—
50	82	54	25	64	8	28	7	50	50	6.6	11 depth 8	1/8	1/8	1/8	24.5	56	28	—	19	—	—	—

∗ Refer to pages 16 and 17 for the auto switch proper mounting position and mounting height.
∗ For the single acting type, a One-touch fitting is on the rod end only. ∗ The position of the width across flats (K) is arbitrary and is not specified.

chanhvinh.com

RSQ Series

Dimensions

These 3 figures show the piston rod extended.
The dimensions of the double acting type with spring loaded, and single acting/ spring extend type are the same as those of the double acting type.



Rod end configuration: Chamfered (Non-rotating piston rod)
Mounting: Through-hole

Bore size: Ø 12 **RS□QB12-10DK (Double acting)**

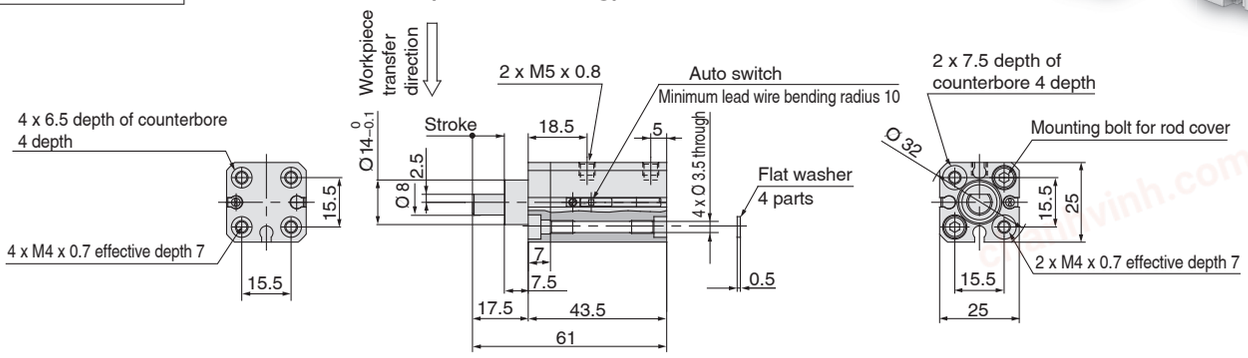

Bore size: Ø 16, Ø 20 **RS□QB$^{16}_{20}$□-□DKZ (Double acting)**

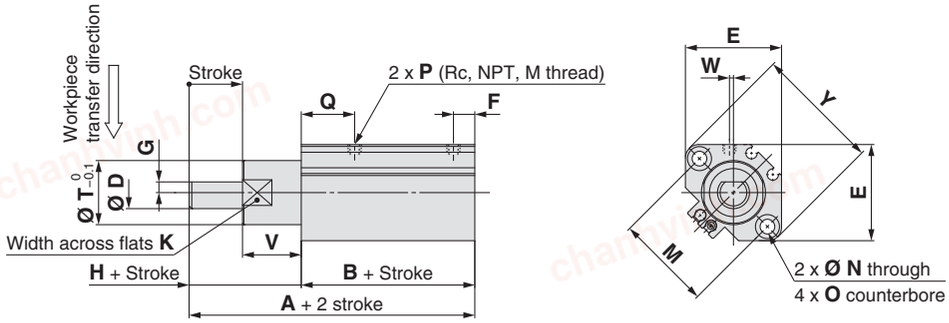

Bore size: Ø 32, Ø 40, Ø 50 **RS□QB$^{32}_{40}_{50}$□-□DKZ (Double acting)**

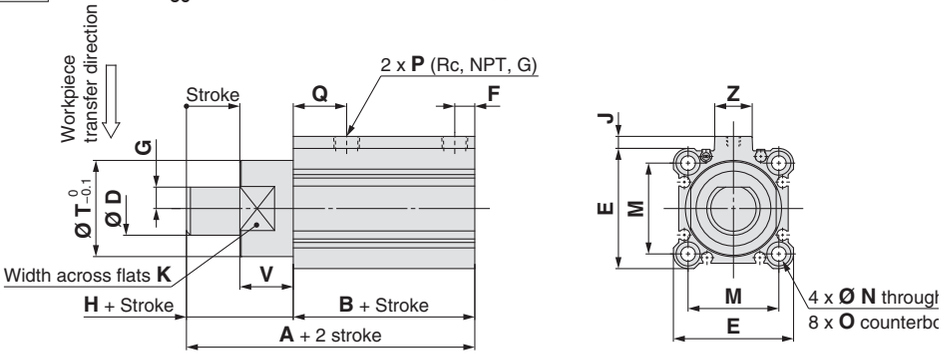

Mounting: Both ends tapped
RS□QA

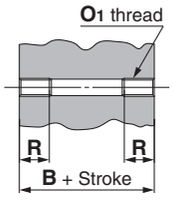

[mm]

Bore size	B	O1	R
16	41.5	M4 x 0.7	7
20	45	M6 x 1	10
32	48	M6 x 1	10
40	52.5	M6 x 1	10
50	54	M8 x 1.25	14

∗ Dimensions other than those shown above are the same as the drawings above.

Female rod end

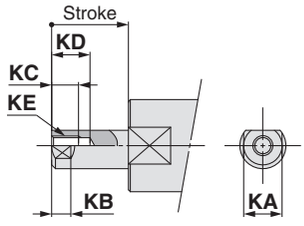

[mm]

Bore size	KA	KB	KC	KD	KE
16	8	4.5	8	10.5	M4 x 0.7
20	10	5	7	10	M5 x 0.8
32	17	7.5	13	16.5	M8 x 1.25
40	22	9.5	13	16.5	M8 x 1.25
50	22	9.5	13	16.5	M8 x 1.25

Refer to page 10 for dimensions of the model with built-in One-touch fittings.

[mm]

Bore size	A	B	D	E	F	G	H	J	K	M	N	O	P			Q	T	V	Y	Z	W		
													Rc	NPT	G						Rc	NPT	G
16	59.5	41.5	10	29	6	3	18	—	18	28	3.5	6.5 depth 4	M5 x 0.8	M5 x 0.8	M5 x 0.8	17	20	18	37	—	0	0	0
20	67	45	12	36	8	4	22	—	22	36	5.5	9 depth 7	1/8	1/8	M5 x 0.8	20	24	22	47	—	1.5	1.5	0
32	68	48	20	45	7.5	8	20	4.5	32	34	5.5	9 depth 7	1/8	1/8	1/8	20	36	20	—	14	—	—	—
40	80.5	52.5	25	52	8	10	28	5	41	40	5.5	9 depth 7	1/8	1/8	1/8	24.5	44	28	—	15	—	—	—
50	82	54	25	64	8	10	28	7	50	50	6.6	11 depth 8	1/8	1/8	1/8	24.5	56	28	—	19	—	—	—

∗ Refer to pages 572 and 573 for the auto switch proper mounting position and mounting height.
∗ For the single acting type, a One-touch fitting is on the rod end only. ∗ The position of the width across flats (K) is arbitrary and is not specified.

chanhvinh.com



Dimensions

These 2 figures show the piston rod extended.
The dimensions of the double acting type with spring loaded, and single acting/ spring extend type are the same as those of the double acting type.

Rod end configuration: Roller type, Mounting: Through-hole

Bore size: Ø 12 **RS□QB12-10DR (Double acting)**

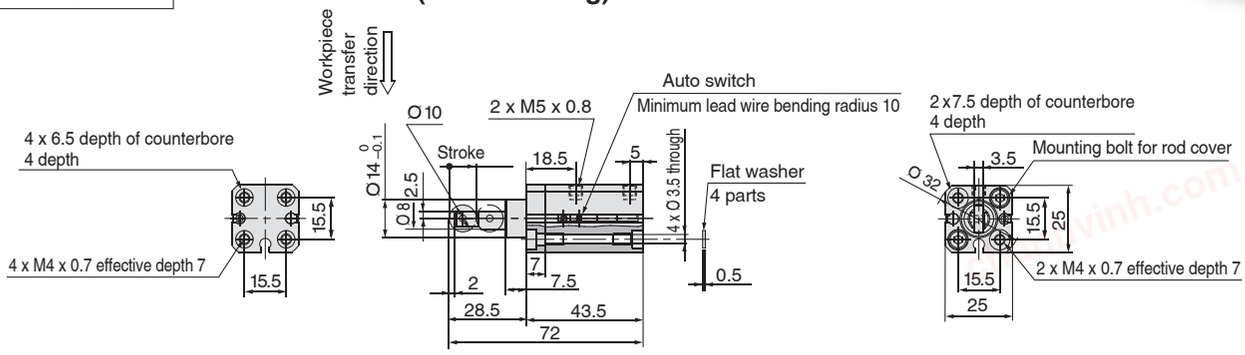

Bore size: Ø 16, Ø 20 **RS□QB$^{16}_{20}$□-□DRZ (Double acting)**

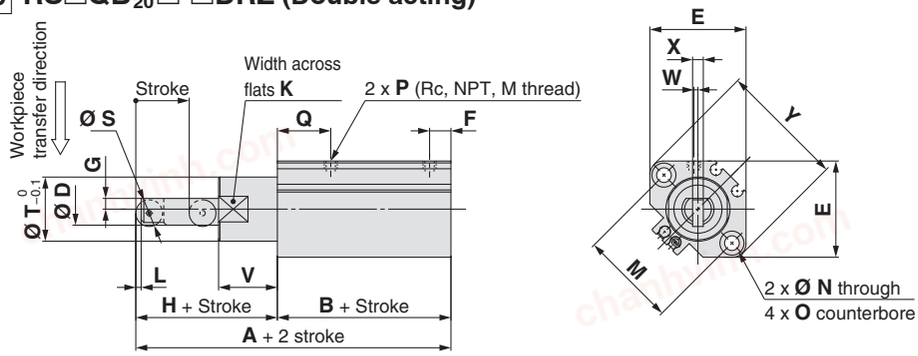

Bore size: Ø 32, Ø 40, Ø 50 **RS□QB$^{32}_{40}_{50}$□-□DRZ (Double acting)**

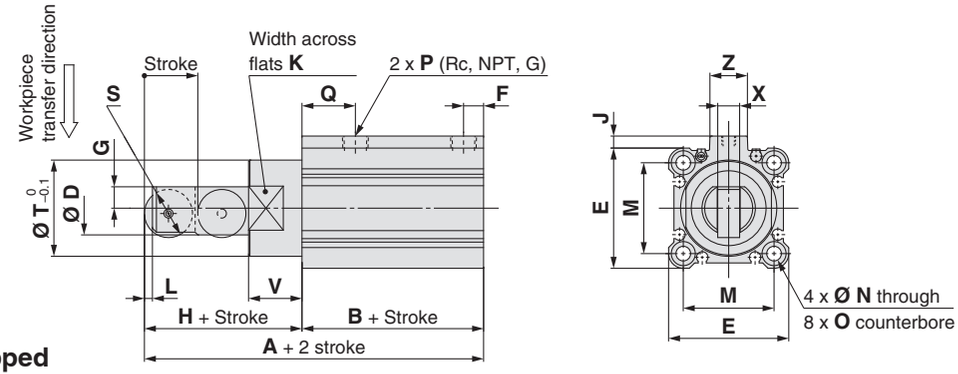

Mounting: Both ends tapped
RS□QA

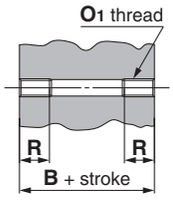

[mm]

Bore size	B	O1	R
16	41.5	M4 x 0.7	7
20	45	M6 x 1	10
32	48	M6 x 1	10
40	52.5	M6 x 1	10
50	54	M8 x 1.25	14

∗ Dimensions other than those shown above are the same as the drawings above.

Refer to page 10 for dimensions of the model with built-in One-touch fittings.

[mm]

Bore size	A	B	D	E	F	G	H	J	K	L	M	N	O	P			Q	S	T	V	X	Y	Z	W		
														Rc	NPT	G								Rc	NPT	G
16	68	41.5	10	29	6	3	26.5	—	18	1.5	28	3.5	6.5 depth 4	M5 x 0.8	M5 x 0.8	M5 x 0.8	17	8	20	18	3.5	37	—	0	0	0
20	78	45	12	36	8	4	33	—	22	2	36	5.5	9 depth 7	1/8	1/8	M5 x 0.8	20	10	24	22	4	47	—	1.5	1.5	0
32	87	48	20	45	7.5	8	39	4.5	32	3	34	5.5	9 depth 7	1/8	1/8	1/8	20	18	36	20	8	—	14	—	—	—
40	105.5	52.5	25	52	8	10	53	5	41	4	40	5.5	9 depth 7	1/8	1/8	1/8	24.5	24	44	28	9	—	15	—	—	—
50	107	54	25	64	8	10	53	7	50	4	50	6.6	11 depth 8	1/8	1/8	1/8	24.5	24	56	28	9	—	19	—	—	—

∗ Refer to pages 572 and 573 for the auto switch proper mounting position and mounting height.
∗ For the single acting type, a One-touch fitting is on the rod end only.
∗ The position of the width across flats (K) is arbitrary and is not specified.

chanhvinh.com

RSQ Series



Dimensions

These 2 figures show the piston rod extended.
The dimensions of the double acting type with spring loaded, and single acting/ spring extend type are the same as those of the double acting type.

Rod end configuration: Lever (Fixed absorber type), Mounting: Through-hole

Bore size: Ø 32 **RS□QB32□-□DLZ (Double acting)**

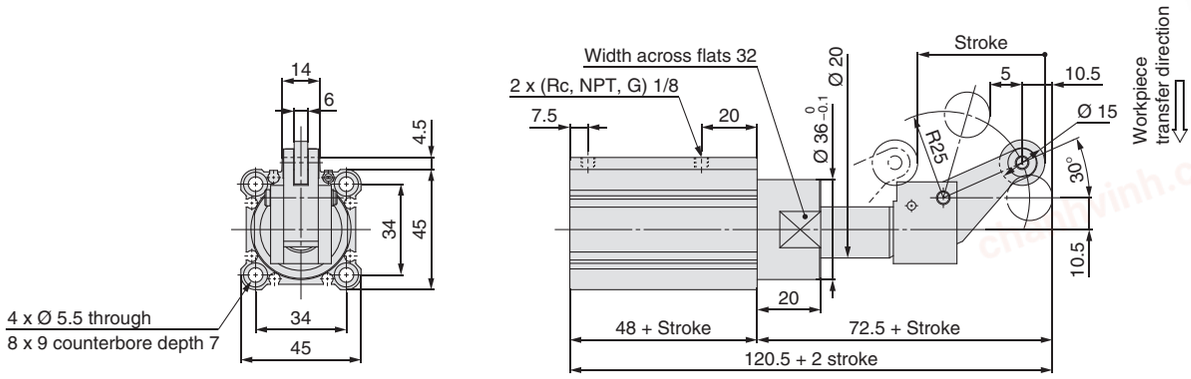

Bore size: Ø 40, Ø 50 **RS□QB$^{40}_{50}$□-□DLZ (Double acting)**

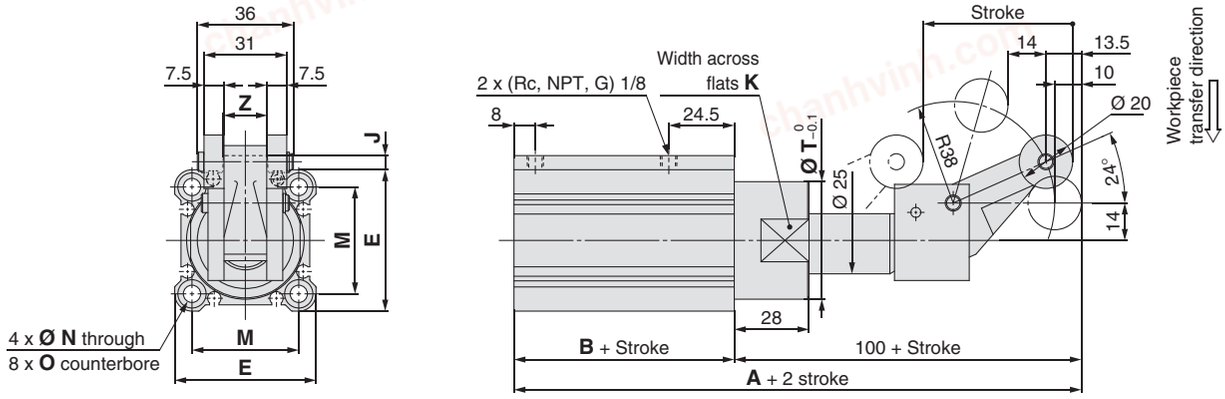

Mounting: Both ends tapped
RS□QA

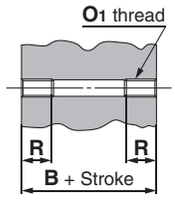

[mm]

Bore size	B	O1	R
32	48	M6 x 1	10
40	52.5	M6 x 1	10
50	54	M8 x 1.25	14

∗ Dimensions other than those shown above are the same as the drawings above.

Refer to page 10 for dimensions of the model with built-in One-touch fittings.

[mm]

Bore size	A	B	E	J	K	M	N	O	T	Z
40	152.5	52.5	52	5	41	40	5.5	9 depth 7	44	15
50	154	54	64	7	50	50	6.6	11 depth 8	56	19

∗ Refer to pages 16 and 17 for the auto switch proper mounting position and mounting height.
∗ For the single acting type, a One-touch fitting is on the rod end only.
∗ The position of the width across flats (K) is arbitrary and is not specified.

chanhvinh.com

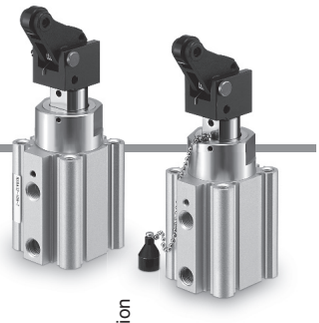

Dimensions

These 3 figures show the piston rod extended.
The dimensions of the double acting type with spring loaded, and single acting/ spring extend type are the same as those of the double acting type.

Rod end configuration: Lever (Adjustable absorber type)
Mounting: Through-hole

Bore size: Ø 32 **RS□QB32□-□DBZ (Double acting)**

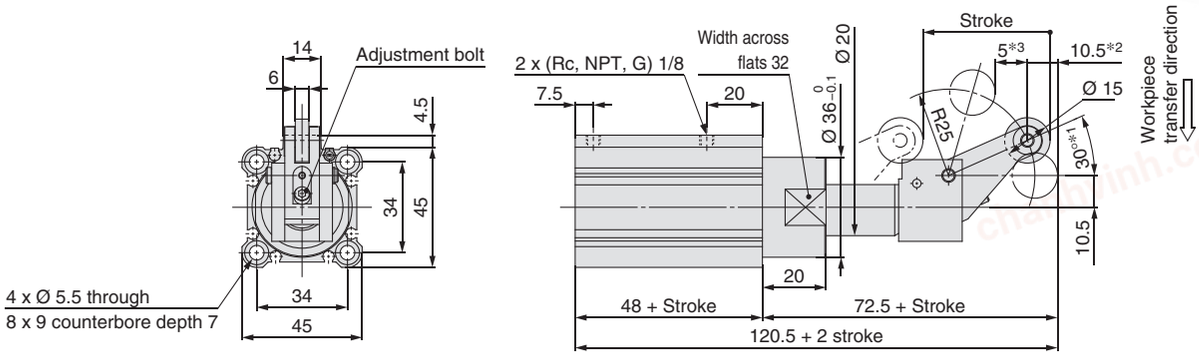

Bore size: Ø 40, Ø 50 **RS□QB$^{40}_{50}$□-□DBZ (Double acting)**

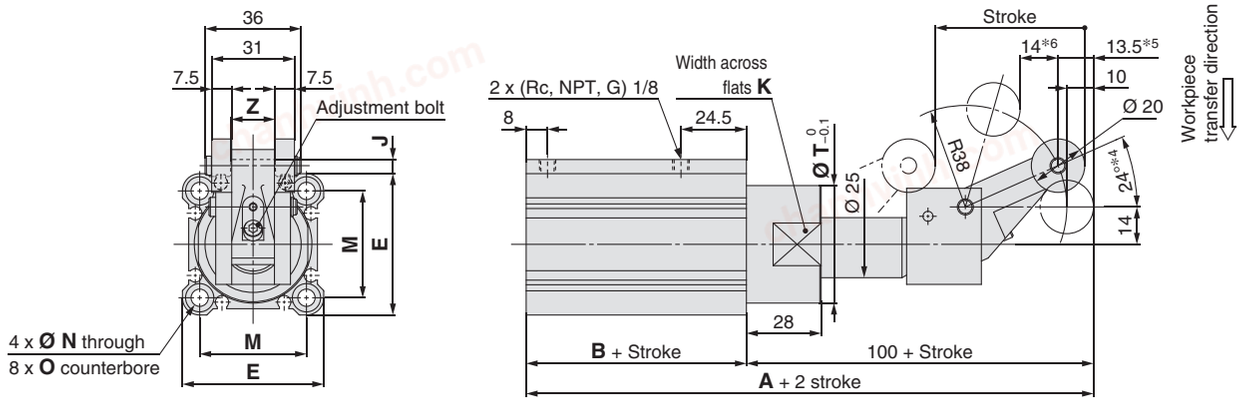

With cancel cap **RS□QB□□-□DCZ (Double acting)**

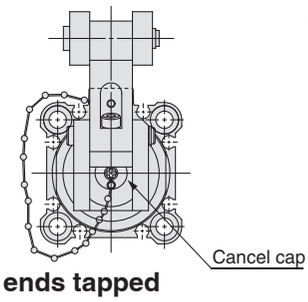

∗ Dimensions are the same as the drawings above.

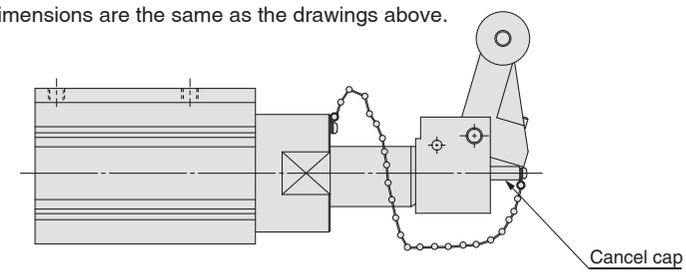

Mounting: Both ends tapped
RS□QA

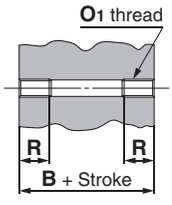

[mm]

Bore size	B	O1	R
32	48	M6 x 1	10
40	52.5	M6 x 1	10
50	54	M8 x 1.25	14

∗ Dimensions other than those shown above are the same as the drawings above.

[mm]

Bore size	A	B	E	J	K	M	N	O	T	Z
40	152.5	52.5	52	5	41	40	5.5	9 depth 7	44	15
50	154	54	64	7	50	50	6.6	11 depth 8	56	19

∗ Refer to pages 16 and 17 for the auto switch proper mounting position and mounting height.
∗ For the single acting type, a One-touch fitting is on the rod end only.
∗ The figures show the dimensions when the adjustment bolt is lowered (when energy absorption is at its maximum). However, these dimensions with asterisk change within the ranges shown below as the adjustment bolt is raised (energy absorption is reduced).
Ø 32···30°*1 → 20°, 10.5*2 → 9, 5*3 → 6
Ø 40, 50···24°*4 → 16°, 13.5*5 → 11.5, 14*6 → 16
∗ The position of the width across flats (K) is arbitrary and is not specified.

Refer to page 10 for dimensions of the model with built-in One-touch fittings.

chanhvinh.com

RSQ Series

Dimensions

These 3 figures show the piston rod extended.
The dimensions of the double acting type with spring loaded, and single acting/ spring extend type are the same as those of the double acting type.

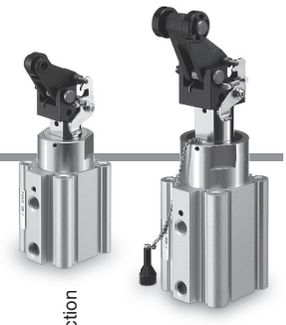

Rod end configuration: Lever (Adjustable absorber type), With lock mechanism
Mounting: Through-hole

Bore size: Ø 32 **RS□QB32□-□DDZ (Double acting)**

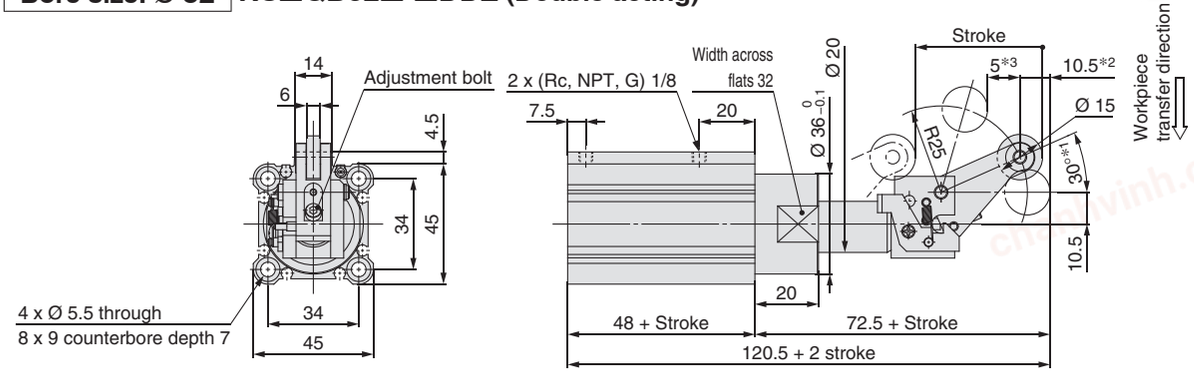

Bore size: Ø 40, Ø 50 **RS□QB$^{40}_{50}$□-□DDZ (Double acting)**

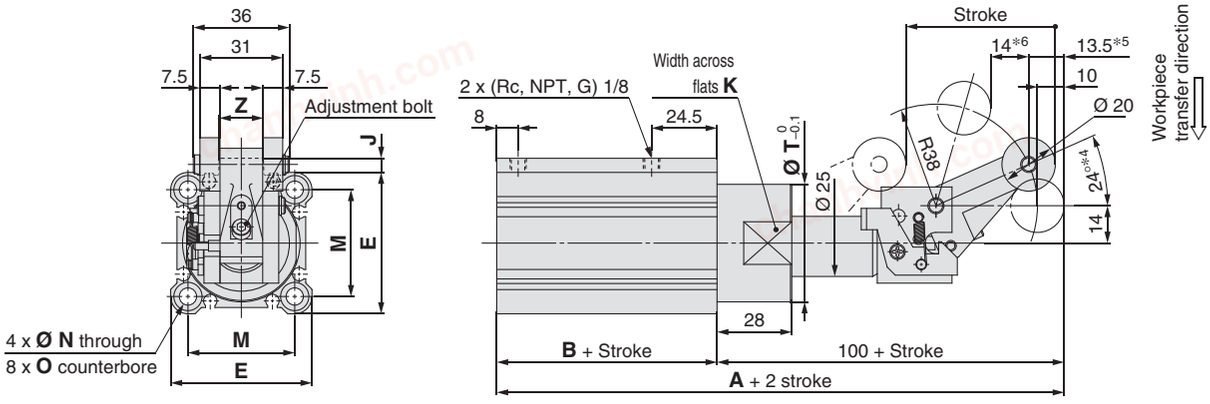

With lock mechanism + cancel cap **RS□QB□□-□DEZ (Double acting)**

∗ Dimensions are the same as the drawings above.

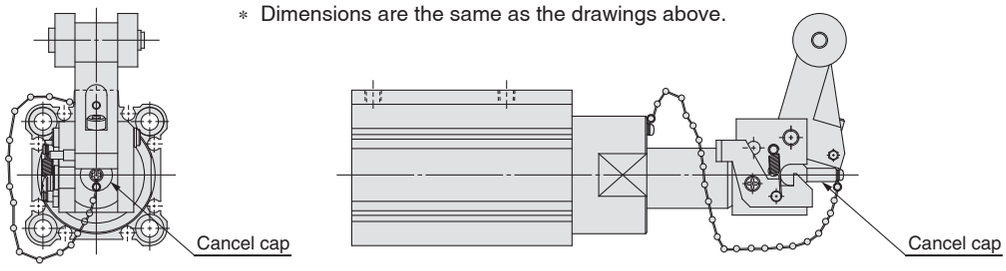

Mounting: Both ends tapped
RS□QA

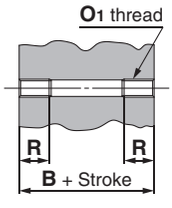

[mm]

Bore size	B	O1	R
32	48	M6 x 1	10
40	52.5	M6 x 1	10
50	54	M8 x 1.25	14

∗ Dimensions other than those shown above are the same as the drawings above.

[mm]

Bore size	A	B	E	J	K	M	N	O	T	Z
40	152.5	52.5	52	5	41	40	5.5	9 depth 7	44	15
50	154	54	64	7	50	50	6.6	11 depth 8	56	19

Refer to page 10 for dimensions of the model with built-in One-touch fittings.

∗ Refer to pages 16 and 17 for the auto switch proper mounting position and mounting height.
∗ For the single acting type, a One-touch fitting is on the rod end only.
∗ The figures show the dimensions when the adjustment bolt is lowered (when energy absorption is at its maximum). However, these dimensions with asterisk change within the ranges shown below as the adjustment bolt is raised (energy absorption is reduced).
Ø 32···30°*1 → 20°, 10.5*2 → 9, 5*3 → 6
Ø 40, 50···24°*4 → 16°, 13.5*5 → 11.5, 14*6 → 16
∗ The position of the width across flats (K) is arbitrary and is not specified.

chanhvinh.com

RSQ Series
Auto Switch Mounting

Auto Switch Proper Mounting Position (Detection at stroke end) and Mounting Height

D-M9□/M9□V
D-M9□W/M9□WV
D-M9□A/M9□AV
D-A9□/A9□V

Ø 12

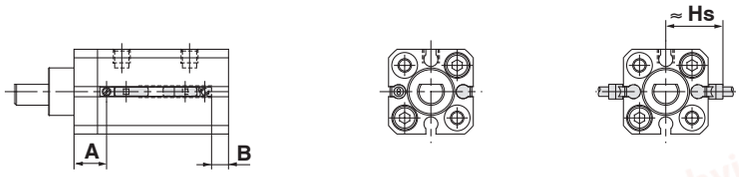

Ø 16, Ø 20

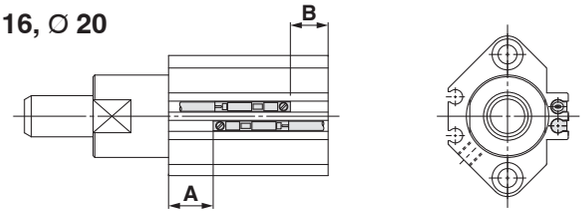

Ø 32 to Ø 50

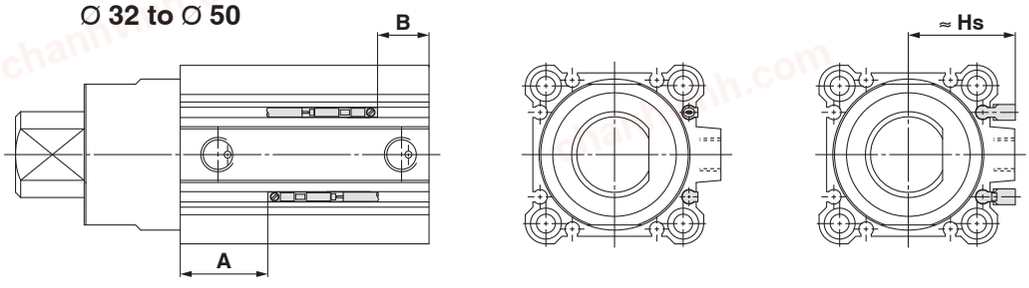

D-A7□
D-A80
D-A7□H
D-A80H
D-F7□
D-J79
D-F7□W
D-J79W
D-F79F
D-F7NT
D-F7BA
D-A73C
D-A80C
D-J79C
D-A79W
D-F7□WV
D-F7□V
D-F7BAV

Ø 16, Ø 20

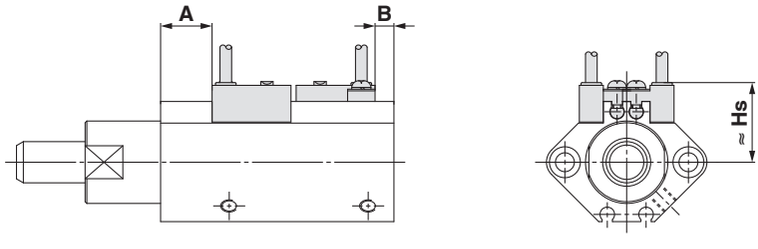

Ø 32 to Ø 50

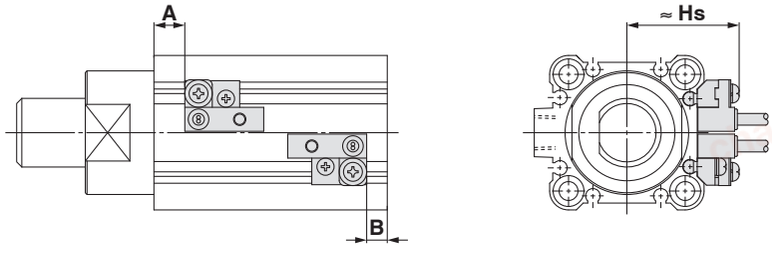

D-P3DWA

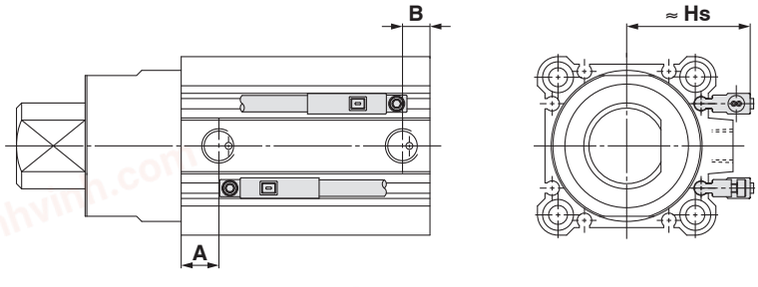

chanhvinh.com

Auto Switch Proper Mounting Position (Detection at stroke end) and Mounting Height

Auto Switch Proper Mounting Position

[mm]

Auto switch model / Bore size	D-M9□ D-M9□V D-M9□W D-M9□WV D-M9□A D-M9□AV		D-A9□ D-A9□V		D-A73 D-A80		D-A72/A7□H/A80H D-A73C/A80C D-F7□/J79 D-F7□V/J79C D-F7BAV/F7BA D-F7□W/J79W D-F7□WV/F79F		D-F7NT		D-A79W		D-P3DWA	
	A	B	A	B	A	B	A	B	A	B	A	B	A	B
12	13	11	9	7	—	—	—	—	—	1—	—	—	—	—
16	13	13	9	9	11.5	11.5	12	12	17	17	9	9	—	—
20	19	11	15	7	17.5	9.5	18	10	23	15	15	7	—	—
32	21	15	17	11	18	12	18.5	12.5	23.5	17.5	15.5	9.5	16.5	10.5
40	25.5	15	21.5	11	22.5	12	23	12.5	28	17.5	20	9.5	21	10.5
50	33.5	8.5	29.5	4.5	30.5	5.5	31	6	36	11	28	3	29	4

∗ Adjust the auto switch after confirming the operating conditions in the actual setting.

Auto Switch Mounting Height

[mm]

Auto switch model / Bore size	D-M9□V D-M9□WV D-M9□AV	D-A9□V	D-A7□ D-A80	D-A7□H D-A80H/F7□ D-J79/F7□W D-F7BA D-J79W D-F79F D-F7NT	D-A73C D-A80C	D-F7□V D-F7□WV D-F7BAV	D-J79C	D-A79W	D-P3DWA
	Hs	Hs	Hs	Hs	Hs	Hs	Hs	Hs	Hs
12	19.5	17	—	—	—	—	—	—	—
16	22.5	20	22	22.5	28.5	24.5	27.5	25.5	—
20	25	23	24.5	25.5	31	27.5	30	28	—
32	30	27.5	34	36	40.5	36.5	39.5	37.5	35.5
40	32	30	37.5	38	43.5	40	42.5	40.5	38
50	37.5	35	43	43.5	49	45	48	46	43

Operating Range

[mm]

Auto switch model	Bore size					
	12	16	20	32	40	50
D-M9□/M9□V D-M9□W/M9□WV D-M9□A/M9□AV	3	5	5.5	6	6	7
D-A9□/A9□V	6	9.5	9	9.5	9.5	9.5
D-A7□/A80 D-A7H/A80H D-A73C/A80C	—	12	12	12	11	10
D-A79W	—	13	13	13	14	14
D-F7□/J79 D-F7□V/J79C D-F7□W/J7□WV D-F7BA/F7BAV D-F79F/F7NT	—	6	5.5	6	6	6
D-P3DWA	—	—	—	5.5	5	6

∗ Values which include hysteresis are for reference purposes only. They are not a guarantee (assuming approximately ±30 % dispersion) and may change substantially depending on the ambient environment.

∗ Auto switch mounting brackets BQ2-012 are not used for sizes Ø 32 or more of D-A9□(V)/M9□(V)/M9□W(V)/M9□A(V) models. The values above indicate the operating range when mounted with the current auto switch installation groove.

chanhvinh.com

Auto Switch Mounting Brackets/Parts Nos.

Applicable auto switch	D-M9□/M9□V D-M9□W/M9□WV D-M9□A/M9□AV D-A9□/A9□V	D-F7□/F7□V/J79/J79C/F7□W/J79W/F7□WV D-F7BA/F7BAV/F79F/F7NT D-A7□/A80/A7□H/A80H/A73C/A80C/A79W		D-P3DWA
Bore size [mm]	∅ 12 to ∅ 50	∅ 16, ∅ 20	∅ 32 to ∅ 50	∅ 32 to ∅ 50
Auto switch mounting bracket part no.	—	BQ4-012	BQ5-032	—
Auto switch mounting bracket fitting parts lineup/weight	—	• Auto switch mounting screw (M2.5 x 8L) • Auto switch mounting nut Weight: 1.5 g	• Auto switch fixing screw (M2.5 x 10L) • Auto switch mounting screw (M3 x 8L) • Auto switch spacer • Auto switch mounting nut Weight: 3.5 g	—
Auto switch mounting surface	A/B/C side except port side (∅ 12) Surfaces with auto switch mounting slot ∅ 12 Port side 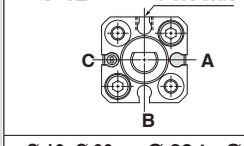 ∅ 16, ∅ 20 ∅ 32 to ∅ 50 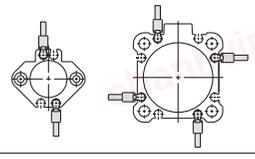	Auto switch mounting rail side only 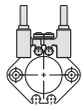	A/B/C side except port side Port side 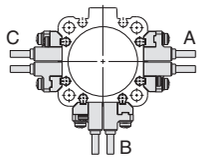	Surfaces with auto switch mounting slot 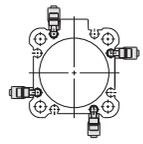
Mounting of auto switch	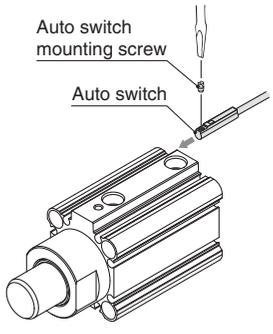 • When tightening the auto switch mounting screw, use a watchmakers screwdriver with a handle diameter of 5 to 6 mm. **Tightening Torque of Auto Switch Mounting Screw** [N·m] Auto switch model / Tightening torque **D-M9□(V) D-M9□W(V) D-A93**: 0.05 to 0.15 **D-M9□A(V)**: 0.05 to 0.10 **D-A9□(V)** (Excludes the **D-A93**): 0.10 to 0.20	① Insert the nut into the auto switch mounting slot on the cylinder tube, and place it in the roughly estimated setting position. ② Engage the ridge on the auto switch mounting arm with the recess in the cylinder tube rail, and slide it to the position of the nut. ③ Gently screw the auto switch mounting screw into the thread of the auto switch mounting nut through the mounting hole on the auto switch mounting arm. ④ Confirm where the mounting position is, and tighten the auto switch mounting screw to fix the auto switch. The tightening torque of the M2.5 screw must be 0.25 to 0.35 N·m. ⑤ The detecting position can be changed under the conditions in step ③. 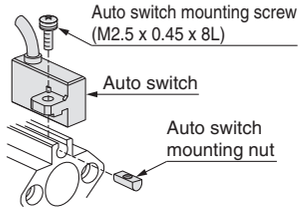	① Insert the nut into the auto switch mounting slot on the cylinder tube, and place it in the roughly estimated setting position. ② With the lower tapered part of the auto switch spacer facing the outside of the cylinder tube, line up the M2.5 through hole with the M2.5 female of the auto switch mounting nut. ③ Gently screw the auto switch mounting nut fixing screw (M2.5) into the thread of the auto switch mounting nut through the mounting hole. ④ Engage the ridge on the auto switch mounting arm with the recess in the auto switch spacer. ⑤ Tighten the auto switch mounting screw (M3) to fix the auto switch. The tightening torque of the M3 screw must be 0.35 to 0.45 N·m. ⑥ Confirm where the mounting position is, and tighten the auto switch fixing screw (M2.5) to fix the auto switch mounting nut. The tightening torque of the M2.5 screw must be 0.25 to 0.35 N·m. ⑦ The detecting position can be changed under the conditions in step ⑤. 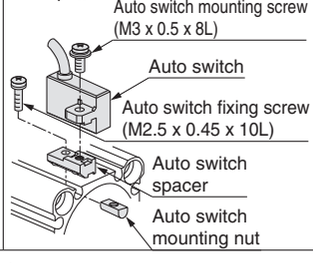	① Insert the auto switch into the slot on the cylinder tube. ② Confirm where the detecting position is, and tighten the hexagon socket head cap screw (M2.5 x 12L) to fix the auto switch. ③ If the detecting position is changed, go back to step ①. * Ensure that the auto switch is inserted into the auto switch mounting slot to protect the auto switch. * The tightening torque for the hexagon socket head cap screw (M2.5 x 12L) is 0.2 to 0.3 N·m. 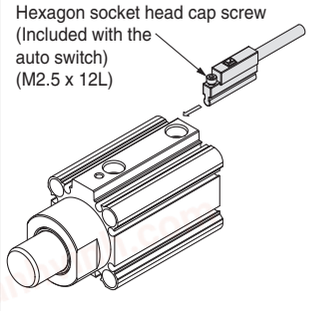

* Auto switch mounting bracket and auto switch are enclosed with the cylinder for shipment.
For an environment that needs the water-resistant auto switch, select the D-M9□A(V) type.
Auto switch mounting bracket for the D-F7BA(V) model uses BQ4-012 and BQ5-032 normal specifications (metal screw).

chanhvinh.com

Auto Switch Mounting Brackets/Part Nos.

[Stainless Steel Mounting Screw]

The following stainless steel mounting screw kit (including nuts) is available. Use it in accordance with the operating environment. (Please order BQ-2 separately, since auto switch spacers (for BQ-2) are not included.)

BBA2: For D-A7/A8/F7/J7 models

The stainless steel screws above are used when a cylinder is shipped with the D-F7BA/F7BAV auto switches. When only one auto switch is shipped independently, the BBA2 is attached.

* When mounting D-M9□A(V) on a port other than the ports for Ø32, Ø40, and Ø50, order auto switch mounting brackets BQ2-012S, BQ-2, and stainless steel screw set BBA2 separately.
* Refer to the **Web Catalog** or Best Pneumatics Catalog for details on the BBA2.

Auto Switch Mounting Bracket Weight

Auto switch mounting bracket part no.	Weight [g]
BQ-1	1.5
BQ-2	1.5
BQ2-012	5

Other than the applicable auto switches listed in “How to Order,” the following auto switches are also mountable.

Other Applicable Auto Switches/Refer to the **Web Catalogue** for further information on auto switches.

Type	Model	Electrical entry	Features
Reed	D-A73	Grommet (Perpendicular)	—
	D-A80		Without indicator light
	D-A73H, A76H	Grommet (In-line)	—
	D-A80H		Without indicator light
Solid state	D-F7NV, F7PV, F7BV	Grommet (Perpendicular)	—
	D-F7NWV, F7BWV		Diagnostic indication (2-colour indicator)
	D-F7BAV		Water-resistant (2-colour indicator)
	D-F79, F7P, J79	Grommet (In-line)	—
	D-F79W, F7PW, J79W		Diagnostic indication (2-colour indicator)
	D-F7BA		Water-resistant (2-colour indicator)
	D-F7NT		With timer

* With pre-wired connector is also available for solid state auto switches. For details, refer to the **Web Catalogue**.
* Normally closed (NC = b contact) solid state auto switches (D-F9G/F9H) are also available. For details, refer to the **Web Catalogue**.

chanhvinh.com

Prior to Use
Auto Switch Connections and Examples

Sink Input Specifications

3-wire, NPN

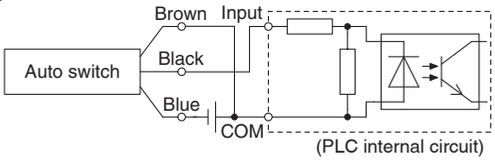

2-wire

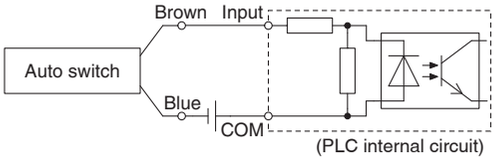

Source Input Specifications

3-wire, PNP

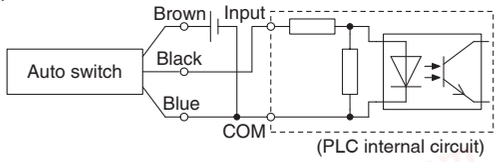

2-wire

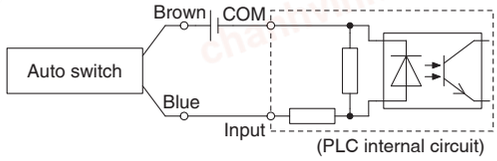

Connect according to the applicable PLC input specifications, as the connection method will vary depending on the PLC input specifications.

Examples of AND (Series) and OR (Parallel) Connections

* When using solid state auto switches, ensure the application is set up so the signals for the first 50 ms are invalid.

3-wire AND connection for NPN output

(Using relays)

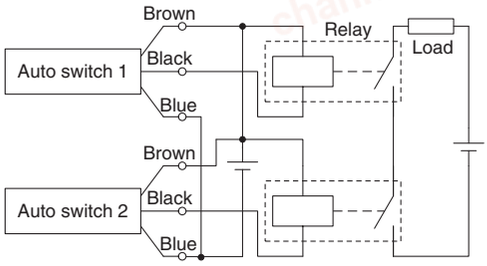

(Performed with auto switches only)

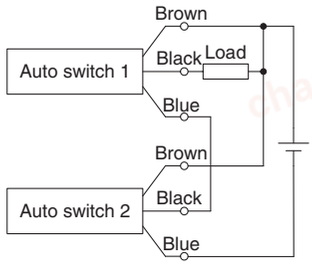

3-wire OR connection for NPN output

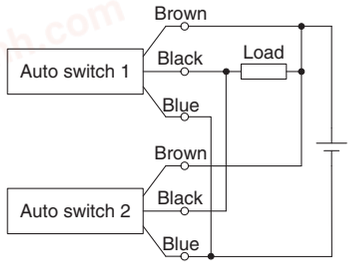

3-wire AND connection for PNP output

(Using relays)

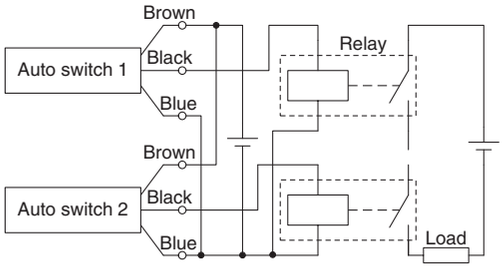

(Performed with auto switches only)

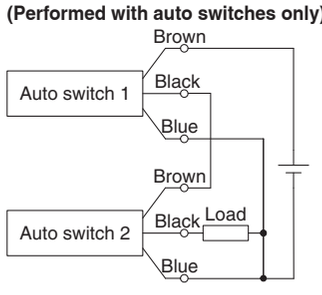

3-wire OR connection for PNP output

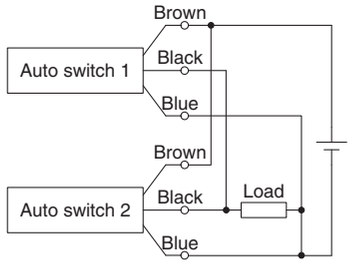

2-wire AND connection

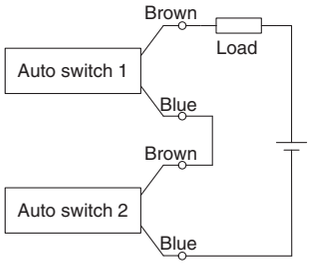

When two auto switches are connected in series, a load may malfunction because the load voltage will decline when in the ON state.
The indicator lights will light up when both of the auto switches are in the ON state.
Auto switches with a load voltage less than 2 0 V cannot be used.

Load voltage at ON = Power supply voltage –
Residual voltage x 2 pcs.
= 24 V – 4 V x 2 pcs.
= 16 V

Example: Power supply is 24 VDC
Internal voltage drop in auto switch is 4 V.

2-wire OR connection

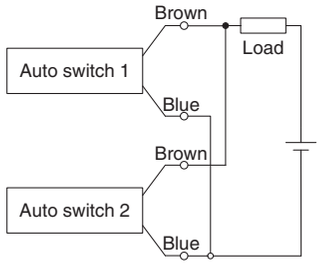

(Solid state)
When two auto switches are connected in parallel, malfunction may occur because the load voltage will increase when in the OFF state.

(Reed)
Because there is no current leakage, the load voltage will not increase when turned OFF. However, depending on the number of auto switches in the ON state, the indicator lights may sometimes grow dim or not light up, due to the dispersion and reduction of the current flowing to the auto switches.

Load voltage at OFF = Leakage current x 2 pcs. x
Load impedance
= 1 mA x 2 pcs. x 3 kΩ
= 6 V

Example: Load impedance is 3 kΩ.
Leakage current from auto switch is 1 mA.

chanhvinh.com

RSQ Series
Simple Specials

The following changes are dealt with through the Simple Specials System.

Please contact your local sales representative for more details.

1 Change of Rod End Shape

Symbol
-XA1 to XA38

Model	Action	Symbol for change of rod end shape
RSQ-Z	Double acting	For round bar Ø 16 XA1, 3, 6, 7, 11, 13, 17, 18, 19, 32, 34 Ø 20 to Ø 50 XA1, 3, 6, 7, 8, 10, 11, 13, 19, 32, 33, 34
	Double acting with spring loaded	
	Single acting	For chamfered XA35, 36, 37, 38

- For chamfered type (XA 3 5 to XA38), make the H dimension to be equal to or less than the values on Table 1 . (For the case with larger dimension than Table 1 , it will be made-to-order separately.)

Table 1

Bore size [mm]	H [mm]
Ø 16	40
Ø 20, Ø 32	63
Ø 40, Ø 50	83

Precautions

- SMC will make appropriate arrangements if no dimension, tolerance, or finish instructions are given in the diagram.
- Standard dimensions marked with "*" will be D – 2 mm to the rod diameter (D). Enter any special dimension you require.
- The following diagram shows piston rod at spring extend.

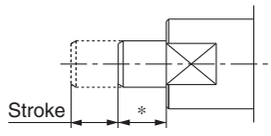

For the lengthwise dimension, enter the amount that you wish to add to the standard dimension.
(If the length is the same for the standard type, * in the figure on the left becomes 0.)

Round Bar

Symbol: A1

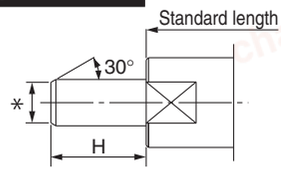

Symbol: A3

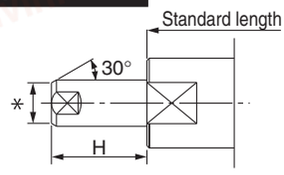

Symbol: A6

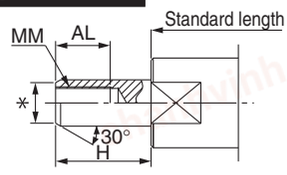

Symbol: A7

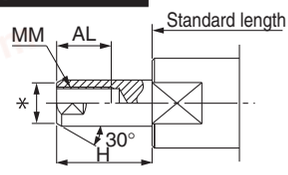

Symbol: A8

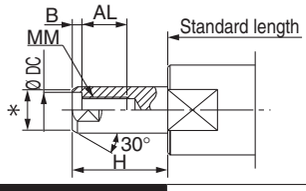

Symbol: A10

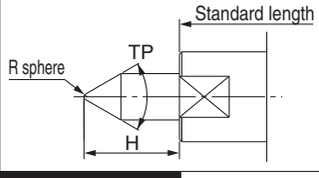

Symbol: A11

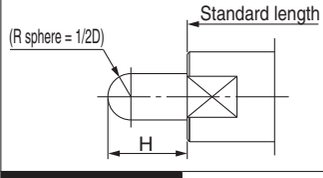

Symbol: A13

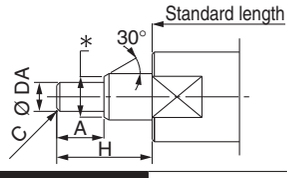

Symbol: A17

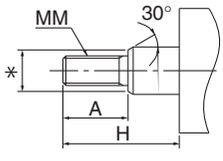

Symbol: A18

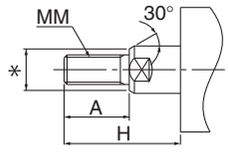

Symbol: A19

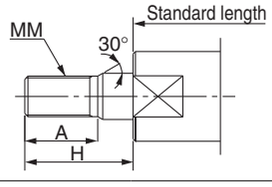

Symbol: A32

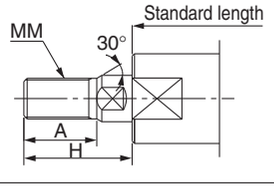

Symbol: A33

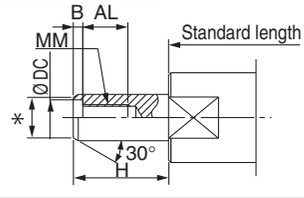

Symbol: A34

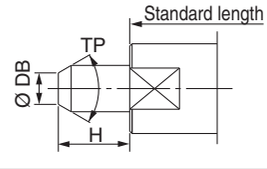

Chamfered

Symbol: A35

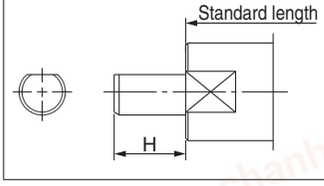

Symbol: A36

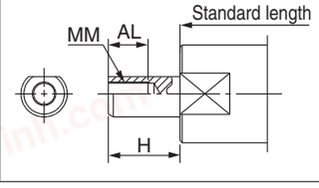

Symbol: A37

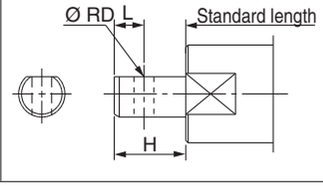

Symbol: A38

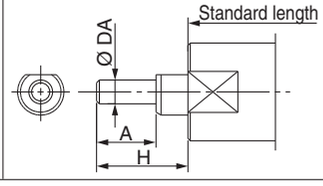

chanhvinh.com

RSQ Series
Made to Order
Common Specifications

Please contact SMC for detailed dimensions, specifications, and lead times.

Made to Order

1 Long Stroke Type

Symbol: **-XB11**

For Ø 12

RS(D)Q | Mounting bracket | 12 – | Stroke | D – | Auto switch | Suffix | –XB11

- Stroke: Refer to the below for specifications.
- –XB11: Long stroke type

For Ø 16 to Ø 50

RS(D)Q | Mounting bracket | Bore size | – | Stroke | DZ – | Auto switch | Suffix | –XB11

- Stroke: Refer to the below for specifications.
- –XB11: Long stroke type

Specifications

Applicable series	RSQ
Action	Double acting
Rod end configuration	Round bar type
Stroke range	See below.
Operating range	See below.
Specifications other than above	Same as standard type

Model	Bore size [mm]	Standard stroke [mm]	Long stroke [mm]
RSQ	12	10	15, 20
RSQ-Z	16	10, 15	20, 30
	20, 32	10, 15, 20	30, 40
	40, 50	20, 25, 30	40, 50

Operating range

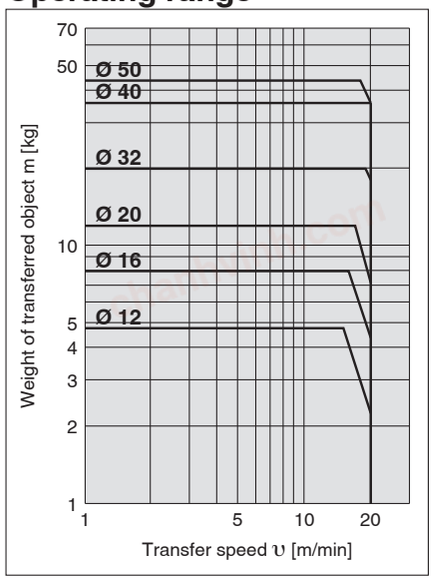

Dimensions (Dimensions other than below are the same as standard type.)

RS□QB12

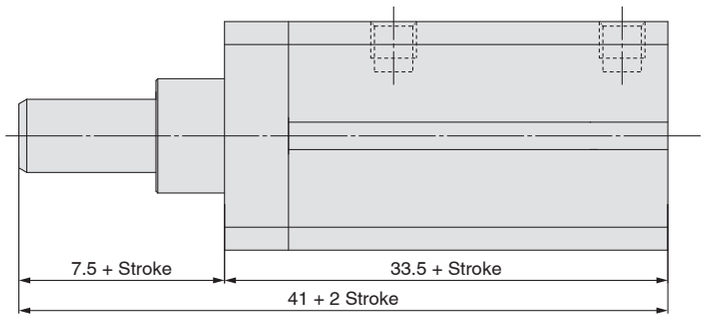

chanhvinh.com

chanhvinh.com
chanhvinh.com
chanhvinh.com
chanhvinh.com
chanhvinh.com
chanhvinh.com

chanhvinh.com

RSQ Series
Made to Order
Common Specifications

Please contact SMC for detailed dimensions, specifications, and lead times.

Made to Order

2 Special Port Location

Symbol **-XC3**

Compared with the standard models, a cylinder which changes the connecting port location and the rod-chamfered location.

Model	Action	Note
RSQ-Z	Double acting	
	Double acting with spring loaded	
	Single acting	

How to Order

Standard model no. **−XC3** **A**

Special port location **Port location**

Specifications: Same as standard

Relationship between the Port Location and Rod-chamfered Location

Corresponding symbol of mounting bracket (Positional relationships)

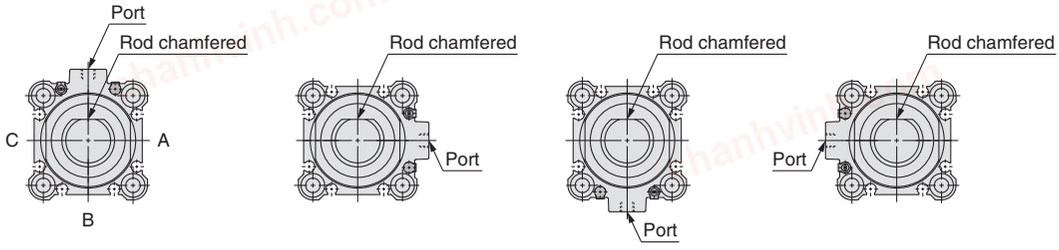

Standard **-XC3A** **-XC3B** **-XC3C**

In the case of standard models, the symbol for port and rod-chamfered positions are on the same surface and positioned upward.
Define the port location at right to be A, and then B, C in a clockwise order.

chanhvinh.com

RSQ Series
Specific Product Precautions 1

Be sure to read this before handling the products. Refer to the back cover for safety instructions. For actuator and auto switch precautions, refer to the "Handling Precautions for SMC Products" and the "Operation Manual" on the SMC website: http://www.smc.eu

Selection

⚠ Danger

1. Use within the range of specifications.

If using beyond the specifications, excessive impacts or vibrations could be applied to the stopper cylinder and might cause breakage.

⚠ Caution

1. Do not allow a pallet to collide with the cylinder when the lever is upright.

For the lever type model with a built-in shock absorber, if the next pallet runs into the lever when it is in the upright position (after the shock absorber has assimilated energy), the cylinder body will receive the full energy of the impact, and this should not be permitted.

2. Do not apply pressure from the head end of a single acting type cylinder.

If air is supplied from the head end of a single acting cylinder, blow-by of the air will occur.

3. Do not scratch or gouge the sliding portion of a piston.

Quenching of the piston rod has not been performed. If there is a danger of scratching or nicking the piston rod due to sharp edges, etc. on the contact area of a pallet, the pallet should not be used, as this can cause a malfunction.

4. When using a stopper cylinder for intermediate stopping of a load connected directly to a cylinder, etc.

The operating ranges shown in this catalog apply only for stopping of a pallet on a conveyor. When using a stopper cylinder to stop a load connected directly to a cylinder, etc., the cylinder thrust will become a lateral load. In this case, refer to the operation manual and select a cylinder remaining within the allowable energy and allowable lateral load ranges.

5. For the lever type model with a built-in shock absorber (without a lock mechanism), the lever may be pushed back in the opposite direction to the transfer direction due to the return force of the shock absorber, if 10 N of thrust or more in the transfer direction is not applied to the lever after the pallet collides with the lever.

If the lever must be continuously upright, select a lever with a lock mechanism.

6. The operating range for the lever type model with a built-in shock absorber indicates the range in which the lever is not damaged due to the shock absorber's performance and cylinder rigidity. It is not the same as the range in which the lever can stop softly and fully.

Near the upper limit, collision may occur at the end. If a soft stop is required, sufficient clearance is necessary. Consult with SMC when a reliable soft stop is required near the upper limit.

Mounting

⚠ Caution

1. Do not apply rotational torque to the cylinder rod.

In order to prevent rotational torque from acting upon the cylinder rod, mount it so that the contacting surfaces of the pallet and cylinder are parallel to one another.

When mounting a cylinder, tighten the body lock nut, and then tighten the set screws (2 locations) which are included with the lock nut. (Except RSQ)

2. When the lever type model with a built-in shock absorber is installed from the direction of the lever side, mounting holes must be machined in accordance with recommend hole diameters in the table below.

When it is installed from the direction of the lever side of the stopper cylinder as shown in Fig. 1, note that the lever's outside diameter is larger than the rod cover boss diameter.

Mounting

⚠ Caution

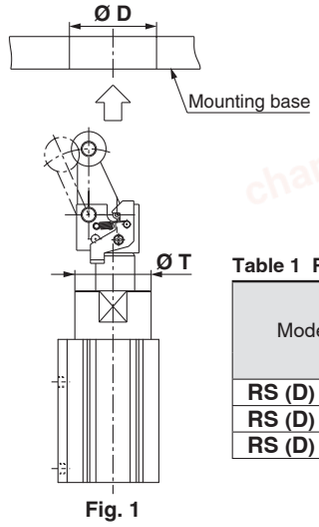

Fig. 1

Lever type models

RS (D) □32/40/50-□□LZ
RS (D) □32/40/50-□□BZ
RS (D) □32/40/50-□□CZ
RS (D) □32/40/50-□□DZ
RS (D) □32/40/50-□□EZ

Table 1 Recommended Hole Diameter

Model	Rod cover boss outside diameter	Recommended hole diameter for mounting base
	ϕT	ϕD
RS (D) □32	36	38
RS (D) □40	44	48
RS (D) □50	56	57

Operation

⚠ Caution

1. For the lever type model with a lock mechanism, do not remove the grease applied to the pin B and the bracket.

When using the cylinder continuously with no grease applied, the lock and unlock may not operate correctly due to unusual wear of the pin B or rod cover.

Check the grease application state periodically and apply the grease when necessary. The grease to be applied is available as grease pack. When the grease pack is required, order it using the part number shown below.

Grease pack part number: GR-S-010 (10 g)

(∗ The grease to be applied is the same as that used for the cylinder.)

Similarly, be careful not to remove the grease from the piston rod end of the built-in shock absorber. Check the grease application state periodically.

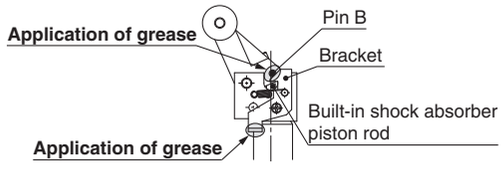

2. For the lever type model with a lock mechanism, do not apply any external force from the opposite side when the lever is locked. Doing so may cause the lock mechanism to break.

When moving pallets during conveyor adjustments, first lower the cylinder.

3. Some structural backlash is present in the lever lock mechanism.

As the stopping position of the pallet can be affected by the weight of the object being transferred, the operating conditions of the conveyor, etc., the stopping position may vary. Please contact SMC if a higher level of stopping accuracy is required for the pallet.

4. Do not use oil, etc. on the sliding parts of the piston rod.

This can cause trouble with retraction or other malfunctions.

5. Do not get your hands caught during cylinder operation.

Since the lever section moves up and down when the cylinder is in operation, take sufficient care to avoid getting your hands caught between the rod cover and the lever holder.

6. Do not expose the shock absorber to machining oil, water, or dust.

This can cause oil leakage and malfunction of the shock absorber.

chanhvinh.com

RSQ Series
Specific Product Precautions 2

Be sure to read this before handling the products. Refer to the back cover for safety instructions. For actuator and auto switch precautions, refer to the "Handling Precautions for SMC Products" and the "Operation Manual" on the SMC website: http://www.smc.eu

Maintenance

⚠ Caution

1. How to replace the shock absorber

1) Loosen the hexagon socket head set screw (M3) on the piston rod.

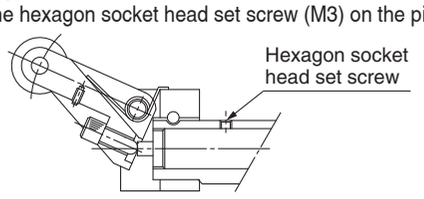

2) With the lever laid down as shown in the figure, pull out the shock absorber to remove it and replace this shock absorber with a new one.

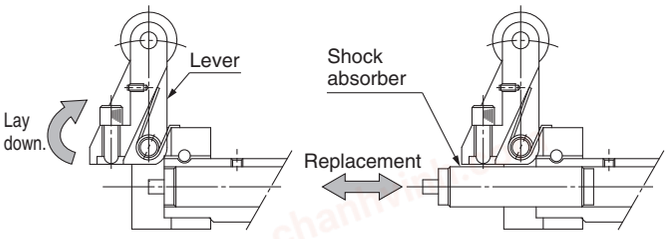

3) Insert the hexagon socket head set screw into the piston rod, and then tighten it.
After the hexagon socket head set screw has been in contact with the end, tighten it further 1/4 turn as a guideline. If the hexagon socket head set screw is tightened excessively, this may cause it to break or the shock absorber to malfunction.
Tightening torque: 0.29 N·m

4) After replacement, apply grease to the piston rod end of the shock absorber.

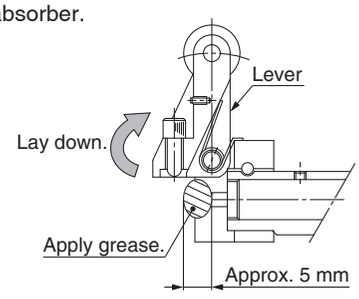

2. How to change the piston rod orientation

For the roller, and lever type models, put the pallet in contact with the piston rod in the direction shown in the figure. (The piping port location has been made flush with the pallet contact surface at the factory shipment.)

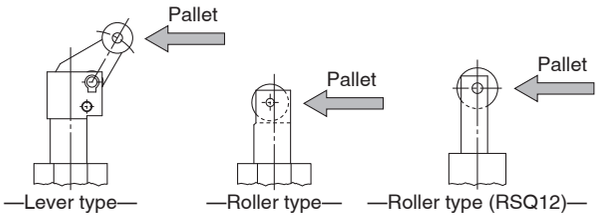

RSQ12/How to change the piston rod orientation

1) Loosen the hexagon socket head cap screws (2 locations) that secure the rod cover and cylinder tube.
2) Adjust the orientation of the rod cover to a desired position.
The orientation of the rod cover can be changed in 90° steps.
3) Tighten two hexagon socket head cap screws on the diagonal line to secure the rod cover and cylinder tube.
When tightening the hexagon socket head cap screws, apply the thread locking agent. Tightening torque: 1.5 N·m
4) Make sure that the cylinder operates smoothly.

⚠ Caution

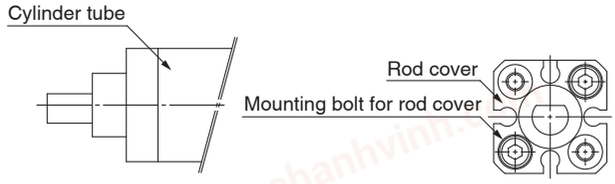

RSQ20 to 50/How to change the piston rod orientation

1) Loosen two hexagon socket head set screws (M3) on the rod cover that secure the non-rotating guide.
2) Adjust the orientation of the piston rod to a desired position.
* Put the pallet contact surface in parallel to the cylinder contact surface so that the rotational torque does not apply to the piston rod.
3) Tighten two hexagon socket head set screws to secure the non-rotating guide. When tightening the hexagon socket head set screws, apply the thread locking agent.
Tightening torque: 0.63 N·m
Note) The non-rotating guide is secured by two hexagon socket head set screws. If one hexagon socket head set screw is tightened excessively, the non-rotating guide may be in contact with the piston rod, causing a malfunction. Therefore, tighten the hexagon socket head set screws alternately and pay special attention so that the non-rotating guide is not in contact with the piston rod.
4) Make sure that the cylinder operates smoothly.

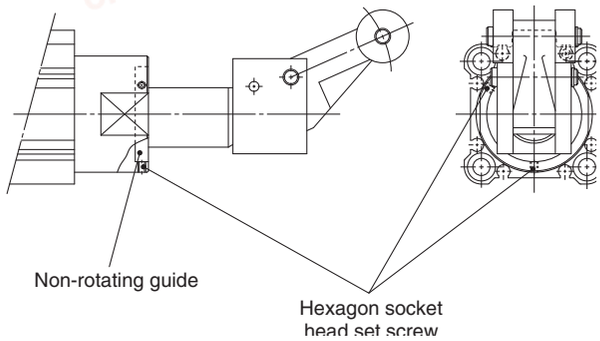

3. How to adjust the lever type (adjustable absorber type)

For the lever type (adjustable absorber type) model, strokes of the shock absorber can be adjusted with an adjustment bolt included in order to stop in accordance with the transfer conditions. Follow the procedures below to adjust strokes.

Procedures

1) Loosen the set screw (M4) on the lever side.
2) Adjust the adjustment bolt in accordance to the energy of the transferred object.
(The stroke of the shock absorber becomes larger (absorbing energy becomes bigger) when tightening the adjustment bolt, while it becomes smaller when loosening the bolt.)
3) After adjusting the adjustment bolt, fix the bolt with the set screw (M4) loosened in 1).
Tightening torque M4: 1.5 N·m

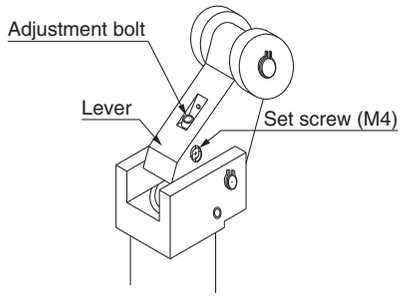

chanhvinh.com

⚠ Safety Instructions

These safety instructions are intended to prevent hazardous situations and/or equipment damage. These instructions indicate the level of potential hazard with the labels of **"Caution," "Warning"** or **"Danger."** They are all important notes for safety and must be followed in addition to International Standards (ISO/IEC) [1], and other safety regulations.

⚠ **Caution:**	**Caution** indicates a hazard with a low level of risk which, if not avoided, could result in minor or moderate injury.
⚠ **Warning:**	**Warning** indicates a hazard with a medium level of risk which, if not avoided, could result in death or serious injury.
⚠ **Danger:**	**Danger** indicates a hazard with a high level of risk which, if not avoided, will result in death or serious injury.

1) ISO 4414: Pneumatic fluid power – General rules relating to systems.
ISO 4413: Hydraulic fluid power – General rules relating to systems.
IEC 60204-1: Safety of machinery – Electrical equipment of machines. (Part 1: General requirements)
ISO 10218-1: Manipulating industrial robots - Safety.
etc.

⚠ Warning

1. The compatibility of the product is the responsibility of the person who designs the equipment or decides its specifications.
Since the product specified here is used under various operating conditions, its compatibility with specific equipment must be decided by the person who designs the equipment or decides its specifications based on necessary analysis and test results. The expected performance and safety assurance of the equipment will be the responsibility of the person who has determined its compatibility with the product. This person should also continuously review all specifications of the product referring to its latest catalogue information, with a view to giving due consideration to any possibility of equipment failure when configuring the equipment.

2. Only personnel with appropriate training should operate machinery and equipment.
The product specified here may become unsafe if handled incorrectly. The assembly, operation and maintenance of machines or equipment including our products must be performed by an operator who is appropriately trained and experienced.

3. Do not service or attempt to remove product and machinery/ equipment until safety is confirmed.
1. The inspection and maintenance of machinery/equipment should only be performed after measures to prevent falling or runaway of the driven objects have been confirmed.
2. When the product is to be removed, confirm that the safety measures as mentioned above are implemented and the power from any appropriate source is cut, and read and understand the specific product precautions of all relevant products carefully.
3. Before machinery/equipment is restarted, take measures to prevent unexpected operation and malfunction.

4. Contact SMC beforehand and take special consideration of safety measures if the product is to be used in any of the following conditions.
1. Conditions and environments outside of the given specifications, or use outdoors or in a place exposed to direct sunlight.
2. Installation on equipment in conjunction with atomic energy, railways, air navigation, space, shipping, vehicles, military, medical treatment, combustion and recreation, or equipment in contact with food and beverages, emergency stop circuits, clutch and brake circuits in press applications, safety equipment or other applications unsuitable for the standard specifications described in the product catalogue.
3. An application which could have negative effects on people, property, or animals requiring special safety analysis.
4. Use in an interlock circuit, which requires the provision of double interlock for possible failure by using a mechanical protective function, and periodical checks to confirm proper operation.

⚠ Caution

1. The product is provided for use in manufacturing industries.
The product herein described is basically provided for peaceful use in manufacturing industries.
If considering using the product in other industries, consult SMC beforehand and exchange specifications or a contract if necessary.
If anything is unclear, contact your nearest sales branch.

Limited warranty and Disclaimer/Compliance Requirements

The product used is subject to the following "Limited warranty and Disclaimer" and "Compliance Requirements".Read and accept them before using the product.

Limited warranty and Disclaimer

1. The warranty period of the product is 1 year in service or 1.5 years after the product is delivered, whichever is first. [2] Also, the product may have specified durability, running distance or replacement parts. Please consult your nearest sales branch.
2. For any failure or damage reported within the warranty period which is clearly our responsibility, a replacement product or necessary parts will be provided. This limited warranty applies only to our product independently, and not to any other damage incurred due to the failure of the product.
3. Prior to using SMC products, please read and understand the warranty terms and disclaimers noted in the specified catalogue for the particular products.

2) Vacuum pads are excluded from this 1 year warranty.
A vacuum pad is a consumable part, so it is warranted for a year after it is delivered. Also, even within the warranty period, the wear of a product due to the use of the vacuum pad or failure due to the deterioration of rubber material are not covered by the limited warranty.

Compliance Requirements

1. The use of SMC products with production equipment for the manufacture of weapons of mass destruction (WMD) or any other weapon is strictly prohibited.
2. The exports of SMC products or technology from one country to another are governed by the relevant security laws and regulations of the countries involved in the transaction. Prior to the shipment of a SMC product to another country, assure that all local rules governing that export are known and followed.

⚠ Caution

SMC products are not intended for use as instruments for legal metrology.
Measurement instruments that SMC manufactures or sells have not been qualified by type approval tests relevant to the metrology (measurement) laws of each country.
Therefore, SMC products cannot be used for business or certification ordained by the metrology (measurement) laws of each country.

chanhvinh.com

SMC Corporation (Europe)

Austria	+43 (0)2262622800	www.smc.at	office@smc.at
Belgium	+32 (0)33551464	www.smc.be	info@smc.be
Bulgaria	+359 (0)2807670	www.smc.bg	office@smc.bg
Croatia	+385 (0)13707288	www.smc.hr	office@smc.hr
Czech Republic	+420 541424611	www.smc.cz	office@smc.cz
Denmark	+45 70252900	www.smcdk.com	smc@smcdk.com
Estonia	+372 651 0370	www.smcee.ee	info@smcee.ee
Finland	+358 207513513	www.smc.fi	smcfi@smc.fi
France	+33 (0)164761000	www.smc-france.fr	supportclient@smc-france.fr
Germany	+49 (0)61034020	www.smc.de	info@smc.de
Greece	+30 210 2717265	www.smchellas.gr	sales@smchellas.gr
Hungary	+36 23513000	www.smc.hu	office@smc.hu
Ireland	+353 (0)14039000	www.smcautomation.ie	sales@smcautomation.ie
Italy	+39 03990691	www.smcitalia.it	mailbox@smcitalia.it
Latvia	+371 67817700	www.smc.lv	info@smc.lv
Lithuania	+370 5 2308118	www.smclt.lt	info@smclt.lt
Netherlands	+31 (0)205318888	www.smc.nl	info@smc.nl
Norway	+47 67129020	www.smc-norge.no	post@smc-norge.no
Poland	+48 222119600	www.smc.pl	office@smc.pl
Portugal	+351 214724500	www.smc.eu	apoioclientept@smc.smces.es
Romania	+40 213205111	www.smcromania.ro	smcromania@smcromania.ro
Russia	+7 (812)3036600	www.smc.eu	sales@smcru.com
Slovakia	+421 (0)413213212	www.smc.sk	office@smc.sk
Slovenia	+386 (0)73885412	www.smc.si	office@smc.si
Spain	+34 945184100	www.smc.eu	post@smc.smces.es
Sweden	+46 (0)86031240	www.smc.nu	smc@smc.nu
Switzerland	+41 (0)523963131	www.smc.ch	info@smc.ch
Turkey	+90 212 489 0 440	www.smcturkey.com.tr	info@smcturkey.com.tr
UK	+44 (0)845 121 5122	www.smc.uk	sales@smc.uk
South Africa	+27 10 900 1233	www.smcza.co.za	zasales@smcza.co.za

Printing BT 00 Printed in Spain

Specifications are subject to change without prior notice and any obligation on the part of the manufacturer