chanhvinh.com

CAT.EUS20-152Ⓑ-UK

SMC

Compact Cylinder with Air Cushion

New AIR CUSHION

The new standard for the future

New Air Cushion Cylinder





Uses a unique air cushion mechanism with no cushion ring.
Size Ø 63, Ø 80 and Ø 100 newly introduced to Series RQ.

Series RQ

Ø 20, Ø 25, Ø 32, Ø 40, Ø 50, Ø 63, Ø 80, Ø 100

chanhvinh.com

Future new standard for shock elimination,

Employs a new construction for the air cushion mechanism.

Compact Cylinder with Air Cushion

RQ Series



New AIR CUSHION

Unique air cushion construction with no cushion ring

Elimination of the cushion ring used in conventional cushion ring type air cushions has made it possible to reduce the overall length of the cylinder. This produces an air cushion cylinder which retains the merits of a compact design.

Operating principle

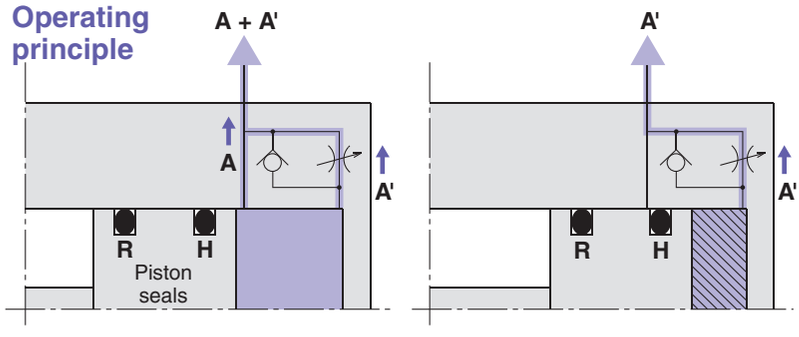

①When the piston is retracting, exhaust is disch-arged from both A and A' until piston seal H passes the air passage A.
②After piston seal H has passed the air passage A, exhaust is discharged only from A'. The sec-tion marked with diagonal lines becomes a cushion chamber, and a cushioning effect is achieved.
③When air is supplied for piston extension, the check seal opens and the piston starts with no delay.

Wide size variations from Ø 20 to Ø 100

Model	Counting	Rod end configuration	Standard stroke	Auto switch
R(D)Q□20 R(D)Q□25 R(D)Q□32 R(D)Q□40 R(D)Q□50 R(D)Q□63 R(D)Q□80 R(D)Q□100	•Through hole •Double end tapped •Foot type •Front flange type •Rear flange type •Double clevis type	•Female threads •Male threads	15 20 25 30 40 50 75 100	•Ø 20 to Ø 100 Direct mount auto switch

∗Size Ø 20 and Ø 25 have through holes and double end taps in common.

chanhvinh.com

noise reduction and improvement in repeatability

Minimal extended dimensions from +2.5mm to 13mm

(Compared with series CDQS/CDQ2 of the same bore size with auto switches)

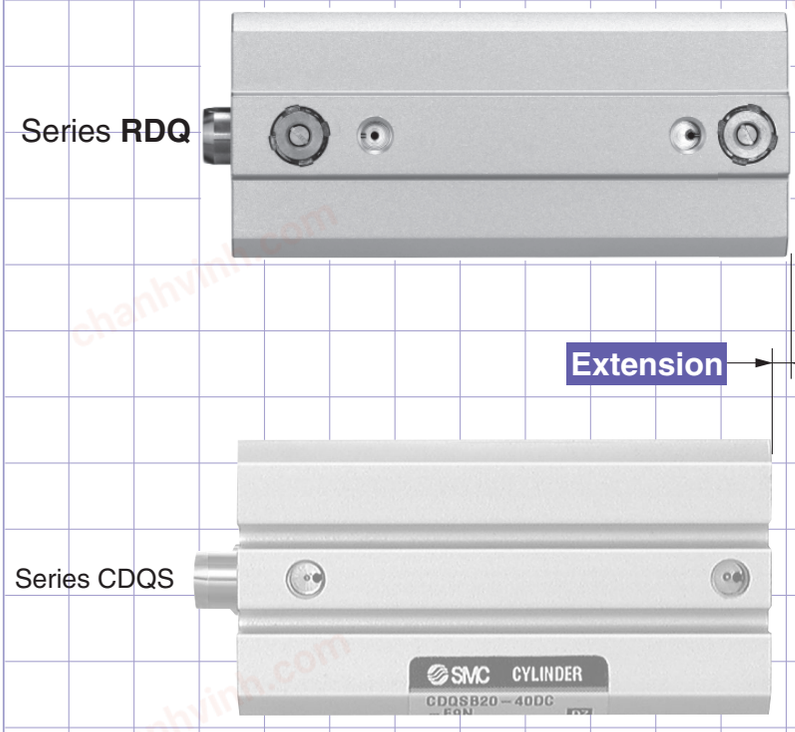

Series	Bore size	Extended dimension	Comparable cylinder
Series RDQ	20	+2.5mm	Series CDQS
	25	+4mm	
	32	+4mm	Series CDQ2
	40	+4.5mm	
	50	+9mm	
	63	+9mm	
	80	+10mm	
	100	+13mm	

Nearly three times the allowable kinetic energy

(Compared to CQS/CQ2 with rubber bumper)

Improved energy absorption allows selection of a cylinder that is two sizes smaller for the same kinetic energy.

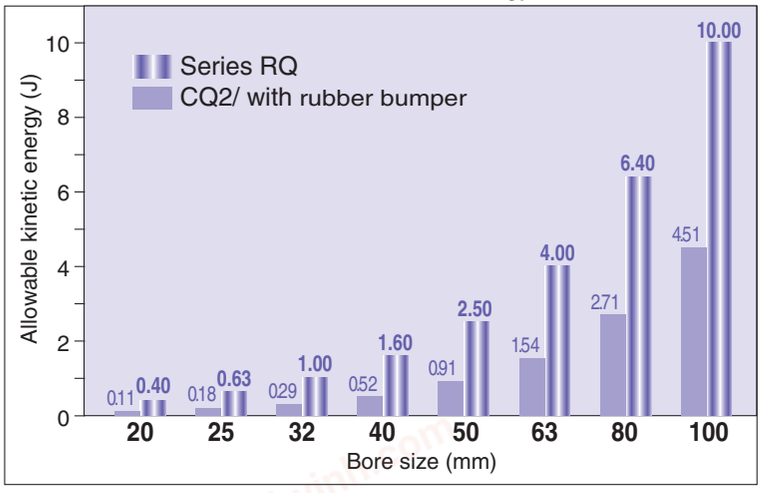

Interchangeable mounting

The mounting dimension "M" is the same as compact cylinder series CQS/CQ2 .

(CQS/CQ2 mounting brackets can be used without any changes.)

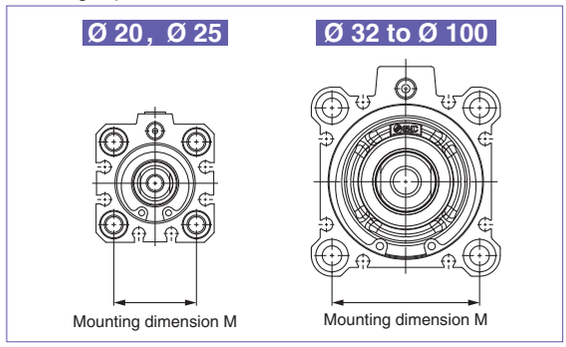

Improved repeatability

The piston contact surface at the stroke end is metal, providing improved repeatability for the stopping position as compared with a rubber bumper.

Improved noise reduction (Stroke end impact noise reduced)

- Decrease of 19dB or more (compared with CQ2 without cushion)
- Decrease of 14dB or more (compared with CQ2 with rubber bumper)

chanhvinh.com

Added compact type foot brackets

■Compact foot bracket has the same width as the cylinder. Overall width reduced by up to 42 % (for Ø 20)

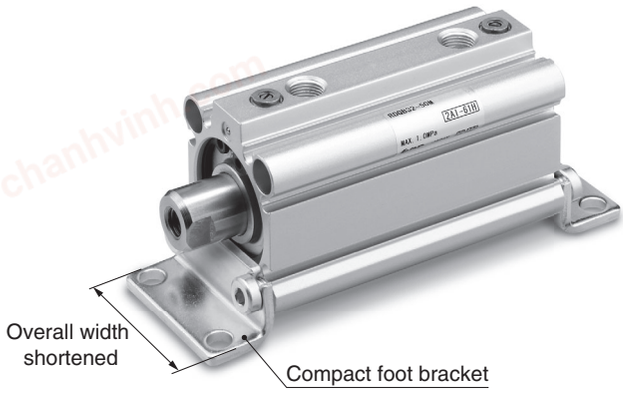

■More compact installation space possible

● Short pitch mounting is possible. ● Allows installation close against a wall.

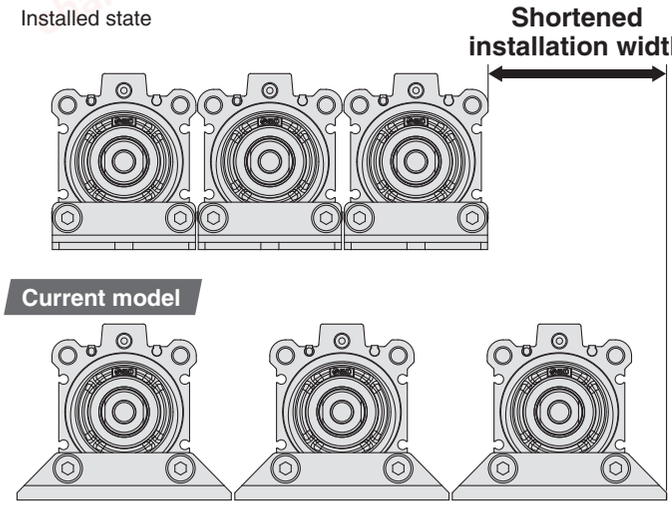

Bore size [mm]	Compact foot type width **A** [mm]	Existing foot type width **B** [mm]	Reduced width for short pitch mounting [mm]		
			1 unit	2 units	3 units
20	36	62	26	52	78
25	40	66	26	52	78
32	45	71	26	52	78
40	52	78	26	52	78
50	64	95	31	62	93
63	77	113	36	72	108
80	98	140	42	84	126
100	117	162	45	90	135

∗ Short pitch mounting is possible only without auto switch. Consult with SMC for mounting with auto switch.

■Height from the bottom of brackets to the center of a cylinder is the same as the existing model.

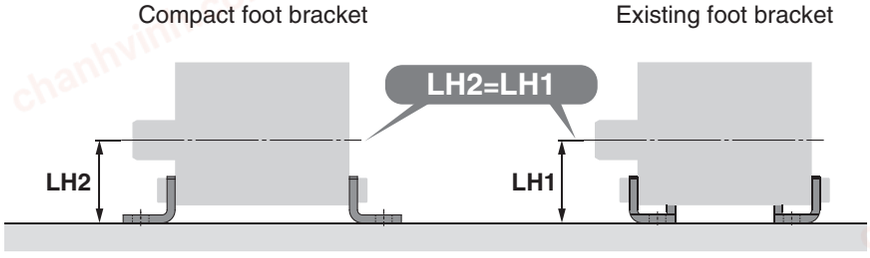

chanhvinh.com

Compact Cylinder with Air Cushion

Series RQ

Ø 20, Ø 25, Ø 32, Ø 40, Ø 50, Ø 63, Ø 80, Ø 100

How to Order

RQ B 32 [ ] – 50 [ ] – [ ]

With auto switch

RDQ B 32 [ ] – 50 [ ] – M9BW [ ] – [ ]

With auto switch
(Built-in magnet)

Mounting bracket

B	Through-hole (Standard)	**F**	Rod side flange type
A	Both ends tapped type	**G**	Head side flange type
L	Foot type	**D**	Double clevis type
LC	Compact foot type		

Note 1) Mounting brackets are packed together when shi-pped (unassembled).
Note 2) Since sizes Ø 20 and Ø 25 have a body with type B (Through-hole) and type A (Both ends tapped type) in common, there is no type A part number. Example) RQA 20-30 does not exist.
Note 3) Cylinder mounting bolts are not included. Order them separately referring to Mounting Bolts for RQB on page 3.

Bore size

20	20 mm	**50**	50 mm
25	25 mm	**63**	63 mm
32	32 mm	**80**	80 mm
40	40 mm	**100**	100 mm

Thread type

—	M thread	Ø 20, 25
	Rc	Ø 32 to Ø 100
TN	NPT	
TF	G	

Cylinder stroke (mm)
Refer to "Standard Stroke" on page 2.

Body option

—	Rod end female thread (Standard)
M	Rod end male thread

Auto switch

—	Without auto switch

∗ Refer to the table below for the applicable auto switch model.

Number of auto switches

—	2 pcs.
S	1 pc
n	"n" pcs.

Made to Order
For details, refer to page 2.

Built-in Magnet Cylinder Model

If a built-in magnet cylinder without an auto switch is required, there is no need to enter the symbol for the auto switch.
(Example) RDQL40-50

Applicable Auto Switches

Type	Special function	Electrical entry	Indicator light	Wiring (Output)	Load voltage DC		Load voltage AC	Auto switch model: Perpendicular	Auto switch model: In-line	Lead wire length (m): 0.5 (—)	1 (M)	3 (L)	5 (Z)	None (N)	Pre-wired connector	Applicable load	
Solid state auto switch	——	Grommet	Yes	3-wire (NPN)	24 V	5 V, 12 V	—	**M9NV**	**M9N**	●	●	●	○	—	○	IC circuit	Relay, PLC
				3-wire (PNP)				**M9PV**	**M9P**	●	●	●	○	—	○		
				2-wire		12 V		**M9BV**	**M9B**	●	●	●	○	—	○	—	
	Diagnostic indicator (2-color indicator)	Grommet		3-wire (NPN)		5 V, 12 V		**M9NWV**	**M9NW**	●	●	●	○	—	○	IC circuit	
				3-wire (PNP)				**M9PWV**	**M9PW**	●	●	●	○	—	○		
				2-wire		12 V		**M9BWV**	**M9BW**	●	●	●	○	—	○	—	
	Water resistance (2-color indicator)			3-wire (NPN)		5 V, 12 V		**M9NAV**∗1	**M9NA**∗1	○	○	●	○	—	○	IC circuit	
				3-wire (PNP)				**M9PAV**∗1	**M9PA**∗1	○	○	●	○	—	○		
				2-wire		12 V		**M9BAV**∗1	**M9BA**∗1	○	○	●	○	—	○	—	
	Magnetic field resistant (2-color indicator)			2-wire (Non-polar)		—		—	**P3DWA**∗∗	●	—	●	●	—	○	—	
Reed auto switch	——	Grommet	Yes	3-wire (NPN equiv.)	—	5 V	—	**A96V**	**A96**	●	—	●	—	—	—	IC circuit	—
			No	2-wire	24 V	12 V	100 V	**A93V**∗2	**A93**	●	●	●	●	—	—	—	Relay, PLC
						5 V, 12 V	100 V or less	**A90V**	**A90**	●	—	●	—	—	—	IC circuit	

∗1 Water resistant type auto switches can be mounted on the above models, but in such case SMC cannot guarantee water resistance. Consult with SMC regarding water resistant types with the above model numbers.
∗2 1 m type lead wire is only applicable to D-A93.

∗ Lead wire length symbols: 0.5 m····· — (Example) M9NW
1 m····· M (Example) M9NWM
3 m····· L (Example) M9NWL
5 m····· Z (Example) M9NWZ
None····· N (Example) J79CN

∗ Solid state auto switches marked with a "○" are produced upon receipt of order.
∗∗ The D-P3DWA□ is mountable on bore size Ø 25 to Ø 100.

∗ Besides the models in the above catalog, there are some other auto switches that are applicable. For more information, refer to page 16.
∗ When mounting brackets (foot/flange type) are used, then in some cases auto switches cannot be retrofitted.

chanhvinh.com

Series RQ



Symbol
Air cushion

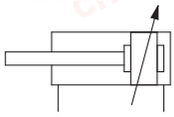

Made to Order

Made to Order

Symbol	Specifications
-XA□	Change of Rod End Shape
-XC4	With heavy duty scraper
-XC35	With coil scraper (For Ø 32 to 100 only)

Allowable kinetic energy

Refer to "Selection" on page 27 regarding the allowable kinetic energy.

Effective Cushion Length

Bore size (mm)	20	25	32	40	50	63	80	100
Effective cushion length (mm)	5.8	6.1	6.6	6.6	7.1	7	7.5	8

Mounting Bracket Part No.

Bore size (mm)	Foot Note 1)	Compact Foot	Flange	Double clevis
20	CQS-L020	CQS-LC020	CQS-F020	CQS-D020
25	CQS-L025	CQS-LC025	CQS-F025	CQS-D025
32	CQ-L032	CQ-LC032	CQ-F032	CQ-D032
40	CQ-L040	CQ-LC040	CQ-F040	CQ-D040
50	CQ-L050	CQ-LC050	CQ-F050	CQ-D050
63	CQ-L063	CQ-LC063	CQ-F063	CQ-D063
80	CQ-L080	CQ-LC080	CQ-F080	CQ-D080
100	CQ-L100	CQ-LC100	CQ-F100	CQ-D100

Note 1) When ordering foot, compact foot brackets, order 2 pieces per cylinder.
Note 2) The following parts are included with each bracket.
Foot, Compact foot, Flange: Body mounting bolts.
Double clevis: Clevis pins, C set ring for axis, and Body mounting bolts.

Specifications

Type	Pneumatic (non-lube) type
Fluid	Air
Proof pressure	1.5 MPa
Maximum operating pressure	1.0 MPa
Minimum operating pressure	0.05 MPa
Ambient and fluid temperature	Without auto switch: -10 °C to 70 °C (with no freezing)
	With auto switch : -10 °C to 60 °C (with no freezing)
Rod end threads	Female threads
Rod end thread tolerance	JIS class 2
Stroke length tolerance	$^{+1.0}_{0}$
Mounting	Through hole
Piston speed	50 to 500 mm/s

Standard Strokes

Bore size (mm)	Standard stroke (mm)
20, 25	15, 20, 25, 30, 40, 50
32, 40	20, 25, 30, 40, 50, 75, 100
50, 63	30, 40, 50, 75, 100
80, 100	40, 50, 75, 100

Manufacture of Intermediate Strokes

Method	Special body type	
Ordering	Refer to "How to Order" for standard part numbers.	
Method	Available in stroke increments of 1mm, using a special body for the specified stroke.	
Stroke range	Bore size	Stroke range
	20, 25	16 to 49
	32, 40	21 to 99
	50, 63	31 to 99
	80, 100	41 to 99
Example	Part number: RQB32-47 A special tube is manufactured for a 47 mm stroke.	

Theoretical Output

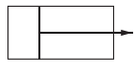

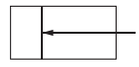

Unit: N

Bore size (mm)	Operating direction	Operating pressure (MPa)		
		0.3	0.5	0.7
20	IN	71	118	165
	OUT	94	157	220
25	IN	113	189	264
	OUT	147	245	344
32	IN	181	302	422
	OUT	241	402	563
40	IN	317	528	739
	OUT	377	628	880
50	IN	495	825	1150
	OUT	589	982	1370
63	IN	841	1400	1960
	OUT	935	1560	2180
80	IN	1360	2270	3170
	OUT	1510	2510	3520
100	IN	2140	3570	5000
	OUT	2360	3930	5500

chanhvinh.com

Weights

Basic Weight

(g)

Bore size (mm)	Standard stroke (mm)							
	15	20	25	30	40	50	75	100
20	135	149	163	177	205	233	—	—
25	190	207	224	241	275	309	—	—
32	—	244	264	283	323	362	461	559
40	—	355	377	399	443	487	597	707
50	—	—	—	665	731	797	962	1127
63	—	—	—	873	948	1022	1208	1393
80	—	—	—	—	1660	1778	2073	2368
100	—	—	—	—	2777	2937	3335	3734

Additional weights

Unit: g

Bore size (mm)		20	25	32	40	50	63	80	100
Magnet		5	6	11	13	14	22	24	35
Double end tapped		—	—	6	6	6	19	45	45
Rod end male threads	Male threads	6	12	26	27	53	53	120	175
	Nut	4	8	17	17	32	32	49	116
Foot (including bolt)		159	181	143	155	243	324	696	1062
Compact foot style (Including bolt)		97	116	99	114	177	241	501	770
Front flange (including bolt)		143	180	180	214	373	559	1056	1365
Rear flange (including bolt)		137	171	165	198	348	534	1017	1309
Double clevis (including pin, snap ring and bolt)		92	127	151	196	393	554	1109	1887

Calculation example) **RQD32-20M**

- Basic weight : RQB32-20 244 g
- Additional weight : Double end tapped 6 g
  Rod end male thread 43 g
  Double clevis 151 g
  444 g

Mounting

Through hole type mounting bolts for RQB are available.
How to order: Add "Bolt" in front of the bolts to be used.
Example) Bolt M5 x 50l 4 pcs.

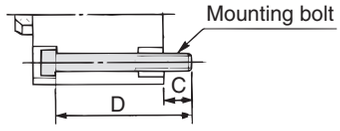

Model	C	D	Mounting bolt
R(D)QB20-15	9	50	M5 x 50l
-20		55	x 55l
-25		60	x 60l
-30		65	x 65l
-40		75	x 75l
-50		85	x 85l
R(D)QB25-15	9.5	55	M5 x 55l
-20		60	x 60l
-25		65	x 65l
-30		70	x 70l
-40		80	x 80l
-50		90	x 90l
R(D)QB32-20	10	60	M5 x 60l
-25		65	x 65l
-30		70	x 70l
-40		80	x 80l
-50		90	x 90l
-75		115	x 115l
-100		140	x 140l

Model	C	D	Mounting bolt
R(D)QB40-20	8	65	M5 x 65l
-25		70	x 70l
-30		75	x 75l
-40		85	x 85l
-50		95	x 95l
-75		120	x 120l
-100		145	x 145l
R(D)QB50-30	13.5	85	M6 x 85l
-40		95	x 95l
-50		105	x 105l
-75		130	x 130l
-100		155	x 155l
R(D)QB63-30	15.5	90	M8 x 90l
-40		100	x 100l
-50		110	x 110l
-75		135	x 135l
-100		160	x 160l
R(D)QB80-40	15	105	M10 x 105l
-50		115	x 115l
-75		140	x 140l
-100		165	x 165l
R(D)QB100-40	17.5	120	M10 x 120l
-50		130	x 130l
-75		155	x 155l
-100		180	x 180l

chanhvinh.com

Series RQ

Construction

Ø 20 to Ø 40

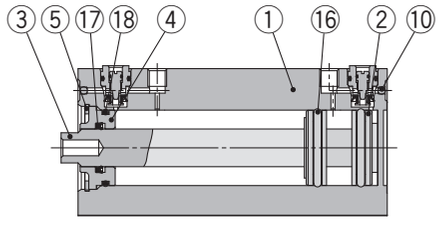

With auto switch (Built-in magnet)

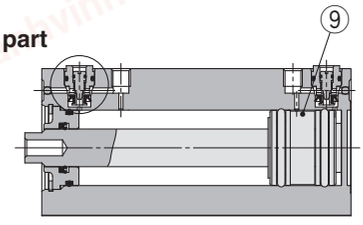

Ø 50 to Ø 100

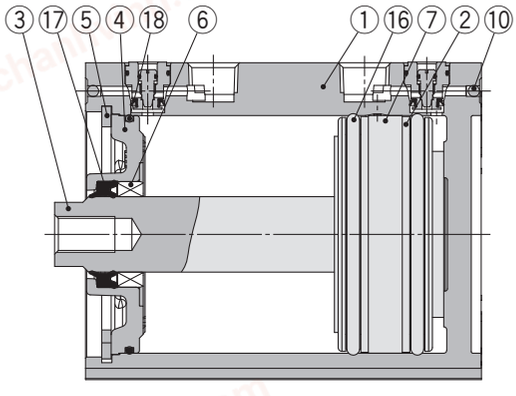

With auto switch (Built-in magnet)

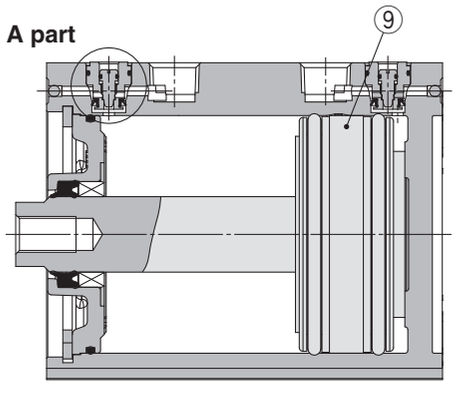

M: Rod end male thread

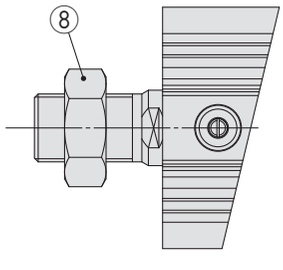

Details of A part

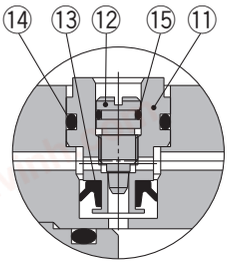

Component Parts

No.	Description	Material	Note
1	**Cylinder tube**	Aluminum alloy	Hard anodized
2	**Piston**	Aluminum alloy	
3	**Piston rod**	Stainless steel	Ø 20, Ø 25
		Carbon steel	Ø 32 to Ø 100, Hard chrome plated
4	**Collar**	Aluminum alloy	Ø 20 to Ø 40, Anodized
		Aluminum alloy casted	Ø 50 to Ø 100, Chromated, Painted
5	**Retaining ring**	Carbon tool steel	Phosphate coating
6	**Bushing**	Bearing alloy	Ø 50 to Ø 100
7	**Wear ring**	Resin	Ø 63 to Ø 100
8	**Rod end nut**	Carbon steel	Zinc chromated
9	**Magnet**	—	
10	**Steel ball**	High carbon chrome bearing steel	
11	**Check seal retainer**	Brass	Electroless nickel plated
12	**Cushion needle**	Stainless steel	
13	**Check seal**	NBR	
14	**Check gasket**	NBR	
15	**Needle gasket**	NBR	
16	**Piston seal**	NBR	
17	**Rod seal**	NBR	
18	**Tube gasket**	NBR	

Replacement Parts/Seal Kit

Bore size (mm)	Part no.	Contents
20	RQB20-PS	Set of nos. above ⑯, ⑰, ⑱.
25	RQB25-PS	
32	RQB32-PS	
40	RQB40-PS	
50	RQB50-PS	
63	RQB63-PS	
80	RQB80-PS	
100	RQB100-PS	

∗ Seal kit includes ⑯, ⑰ and ⑱. Order the seal kit, based on each bore size.
∗ Since the seal kit does not include a grease pack, order it separately.
Grease pack part no.: GR-S-010 (10 g)

chanhvinh.com

Dimensions: Ø 20, Ø 25

∗ For the auto switch mounting position and its mounting height, refer to pages 16 and 17.

Basic type (Through-hole/Both ends tapped common): RQB/RDQB

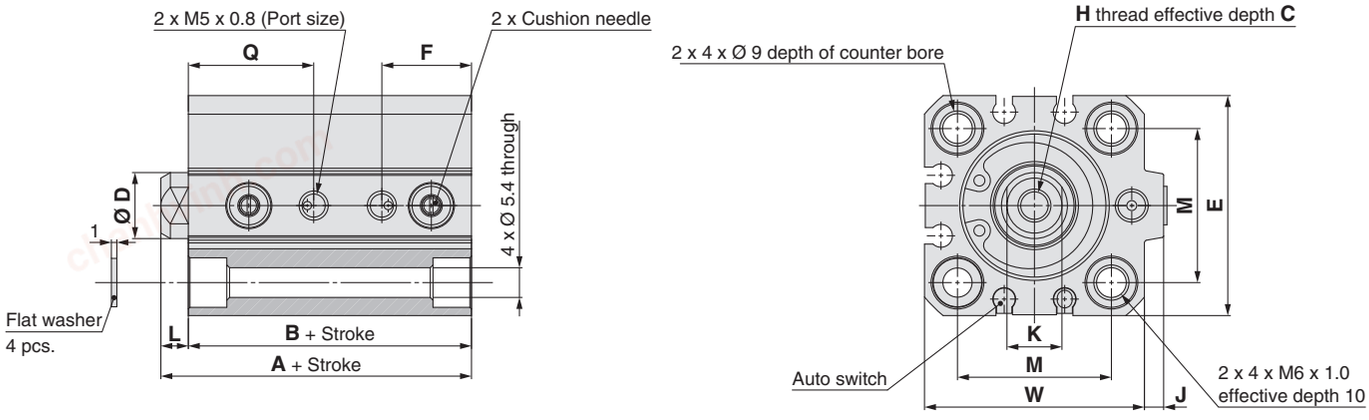

Standard type

mm

Bore size (mm)	Stroke range (mm)	A	B	C	D	E	F	H	J	K	L	M	Q	W
20	15 to 50	36.5	32	7	10	36	15.5	M5 x 0.8	3	8	4.5	25.5	21	39
25	15 to 50	41.5	36.5	12	12	40	17	M6 x 1.0	3.5	10	5	28	23	43.5

∗Refer to page 11 for details on rod end nut and accessories.

• Add the stroke to calculate the length of intermediate strokes.

Rod end male thread

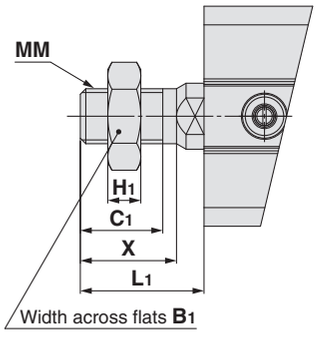

Rod end male threads

mm

Bore size (mm)	B_1	H_1	C_1	X	MM	L_1
20	13	5	12	14	M8 x 1.25	18.5
25	17	6	15	17.5	M10 x 1.25	22.5

chanhvinh.com

Series RQ

Mounting Bracket Dimensions

Foot type: RQL/RDQL

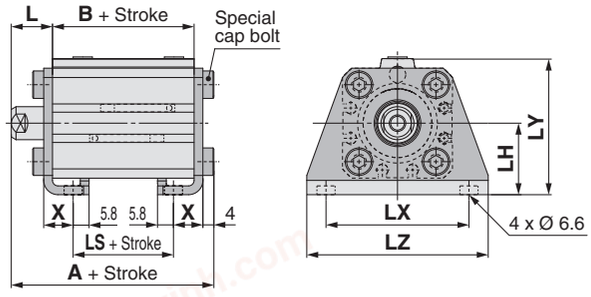

Rod end male thread

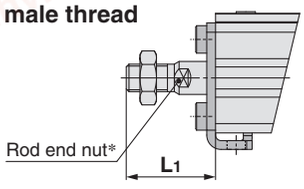

Foot Type mm

Bore size (mm)	Stroke range (mm)	A	B	LS	L
20	15 to 50	53.7	32	20	14.5
25	15 to 50	58.7	36.5	21.5	15

mm

Bore size (mm)	L1	LH	LX	LY	LZ	X
20	28.5	24	48	45	62	9.2
25	32.5	26	52	49.5	66	10.7

Foot bracket material: Carbon steel
Surface treatment: Nickel plated

Compact foot type: RQLC/RDQLC

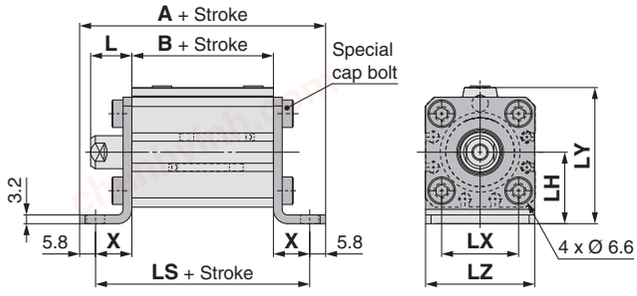

Rod end male thread

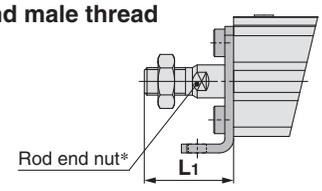

Compact Foot Type mm

Bore size (mm)	Stroke range (mm)	A	B	LS	L
20	15 to 50	70	32	58.4	14.5
25	15 to 50	74.5	36.5	62.9	15

mm

Bore size (mm)	L1	LH	LX	LY	LZ	X
20	28.5	24	25.5	45	36	13.2
25	32.5	26	28	49.5	40	13.2

Foot bracket material: Carbon steel
Surface treatment: Zinc chromated

Rod side flange type: RQF/RDQF

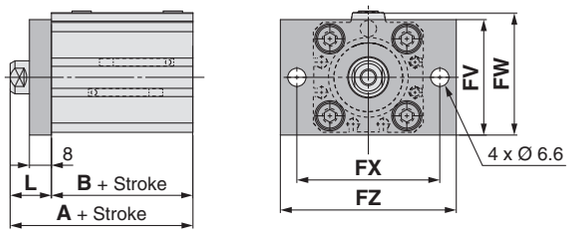

Rod end male thread

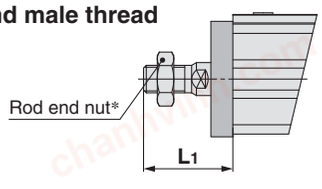

Rod Side Flange Type mm

Bore size (mm)	Stroke range (mm)	A	B	L
20	15 to 50	46.5	32	14.5
25	15 to 50	51.5	36.5	15

mm

Bore size (mm)	L1	FV	FW	FX	FZ
20	28.5	39	40.5	48	60
25	32.5	42	44.5	52	64

Flange material: Carbon steel
Surface treatment: Nickel plated

chanhvinh.com

Mounting Bracket Dimensions

Head side flange type: RQG/RDQG

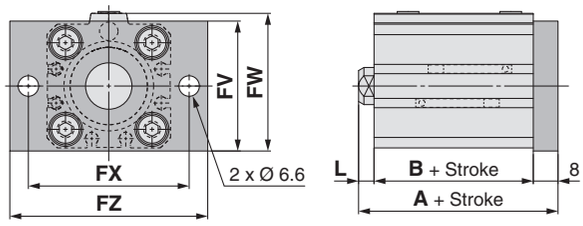

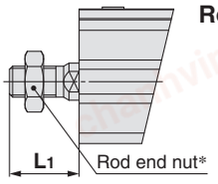

Head Side Flange Type

mm

Bore size (mm)	Stroke range (mm)	A	L	L_1
20	15 to 50	44.5	4.5	18.5
25	15 to 50	49.5	5	22.5

* All dimensions but A, L and L_1 are identical to those of the rod side flange type.

Flange material: Carbon steel
Surface treatment: Nickel plated

Double clevis type: RQD/RDQD

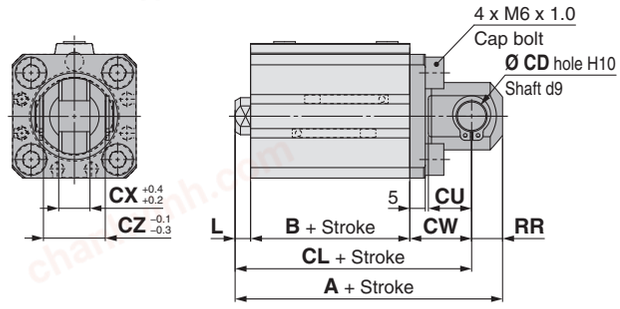

Double Clevis Type

mm

Bore size (mm)	Stroke range (mm)	A	B	CL	CD	CU
20	15 to 50	63.5	32	54.5	8	12
25	15 to 50	71.5	36.5	61.5	10	14

mm

Bore size (mm)	CW	CX	CZ	L	L_1	RR
20	18	8	16	4.5	18.5	9
25	20	10	20	5	22.5	10

* Double clevis pins and retaining rings are included in the package.
* Refer to page 8 for details on rod end nut and accessories.

Double clevis bracket material: Carbon steel
Surface treatment: Nickel plated

chanhvinh.com

Series RQ

Dimensions: Ø 32, Ø 40, Ø 50

∗ For the auto switch mounting position and its mounting height, refer to pages 16 and 17.

Basic type (Through-hole): RQB/RDQB

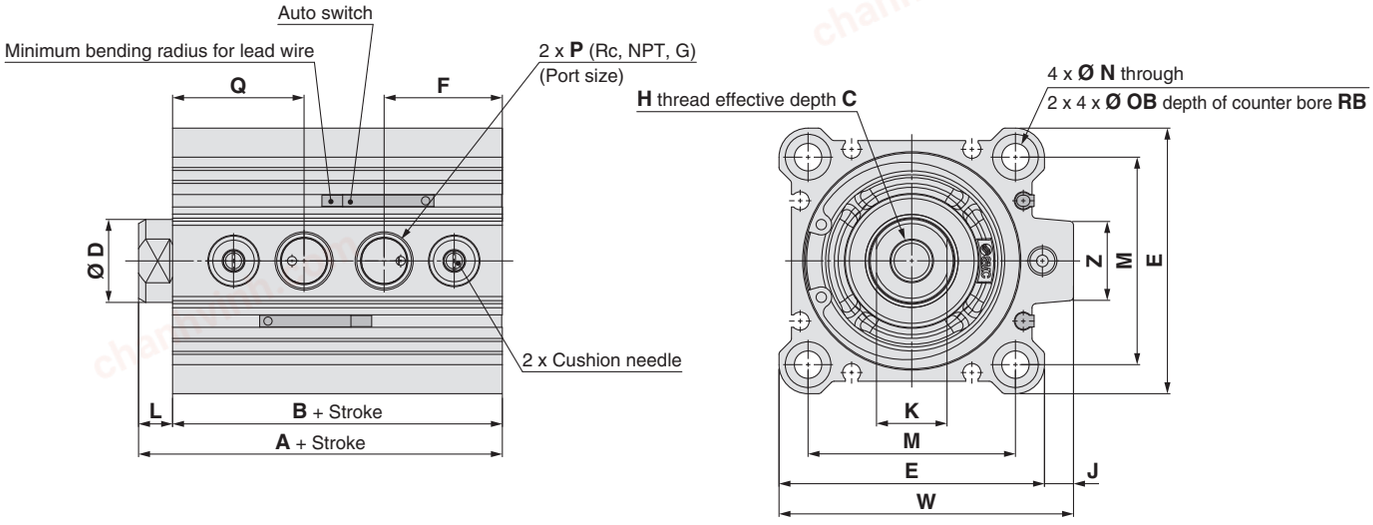

mm

Bore size (mm)	Stroke range (mm)	A	B	C	D	E	F	H	J	K	L	M	N
32	20 to 100	44	37	13	16	45	18.5	M8 x 1.25	4.5	14	7	34	5.5
40	20 to 100	51	44	13	16	52	20	M8 x 1.25	5	14	7	40	5.5
50	30 to 100	57.5	49.5	15	20	64	28.5	M10 x 1.5	7	17	8	50	6.6

mm

Bore size (mm)	OB	P	Q	RB	W	Z
32	9	1/8	23	7	49.5	14
40	9	1/8	28	7	57	14
50	11	1/4	31.5	8	71	19

∗ Refer to page 11 for details on rod end nut and accessories.

• Add the stroke to calculate the length of intermediate strokes.

Both ends tapped type: RQA/RDQA

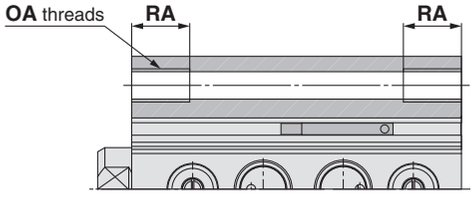

mm

Bore size (mm)	OA	RA
32	M6 x 1.0	10
40	M6 x 1.0	10
50	M8 x 1.25	14

Rod end male thread

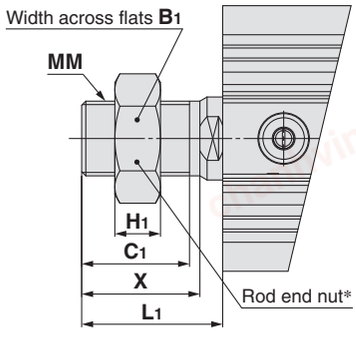

mm

Bore size (mm)	B1	H1	C1	X	MM	L1
32	22	8	20.5	23.5	M14 x 1.5	28.5
40	22	8	20.5	23.5	M14 x 1.5	28.5
50	27	11	26	28.5	M18 x 1.5	33.5

chanhvinh.com

Mounting Bracket Dimensions

Foot type: RQL/RDQL

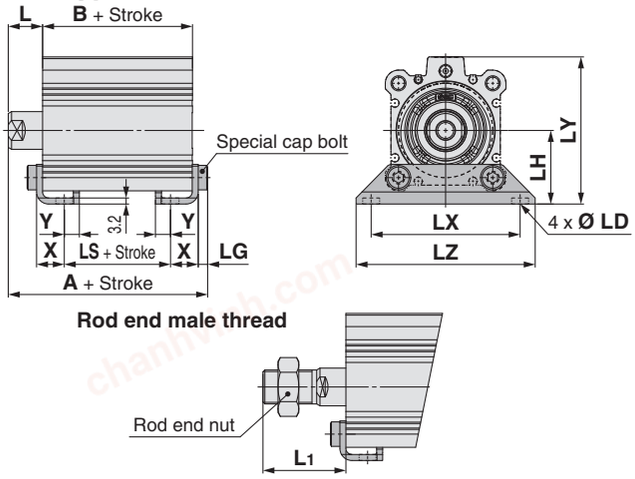

Foot Type mm

Bore size (mm)	Stroke range (mm)	A	B	LS	L	L1	LD
32	20 to 100	61.2	37	21	17	38.5	6.6
40	20 to 100	68.2	44	28	17	38.5	6.6
50	30 to 100	75.7	49.5	26.5	18	43.5	9

mm

Bore size (mm)	LG	LH	LX	LY	LZ	X	Y
32	4	30	57	57	71	11.2	5.8
40	4	33	64	64	78	11.2	7
50	5	39	79	78	95	14.7	8

Foot bracket material: Carbon steel
Surface treatment: Nickel plated

Compact foot type: RQLC/RDQLC

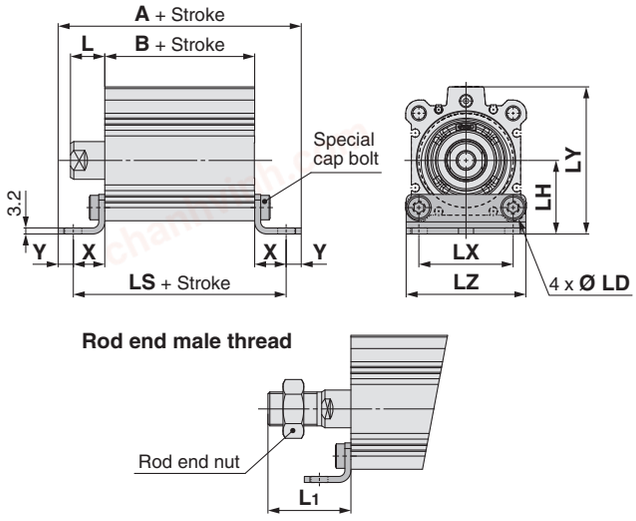

Compact Foot Type mm

Bore size (mm)	Stroke range (mm)	A	B	LS	L	L1	LD
32	20 to 100	76	37	64.4	17	38.5	6.6
40	20 to 100	85.4	44	71.4	17	38.5	6.6
50	30 to 100	98.9	49.5	82.9	18	43.5	9

mm

Bore size (mm)	LH	LX	LY	LZ	X	Y
32	30	34	57	45	13.7	5.8
40	33	40	64	52	13.7	7
50	39	50	78	64	16.7	8

Foot bracket material: Carbon steel
Surface treatment: Zinc chromated

Rod side flange type: RQF/RDQF

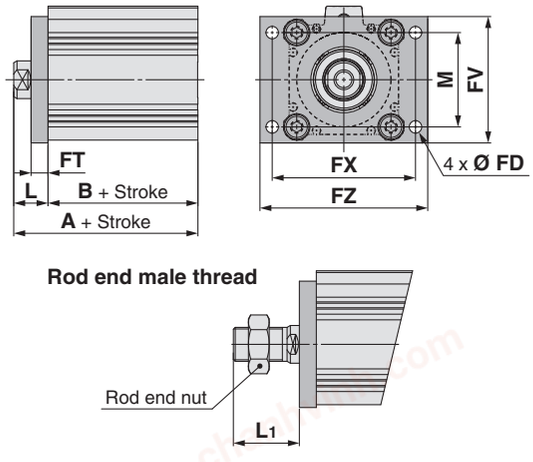

Rod Side Flange Type mm

Bore size (mm)	Stroke range (mm)	A	B	FD	FT	FV
32	20 to 100	54	37	5.5	8	48
40	20 to 100	61	44	5.5	8	54
50	30 to 100	67.5	49.5	6.6	9	67

mm

Bore size (mm)	FX	FZ	L	L1	M
32	56	65	17	38.5	34
40	62	72	17	38.5	40
50	76	89	18	43.5	50

Flange bracket material: Carbon steel
Surface treatment: Nickel plated

chanhvinh.com

Mounting Bracket Dimensions

Head side flange type: RQG/RDQG

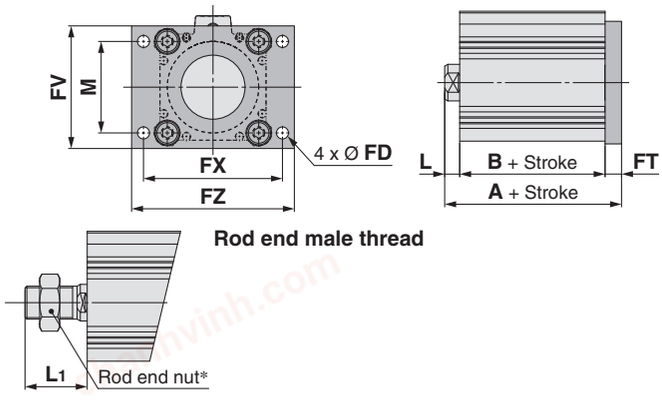

Head Side Flange Type

mm

Bore size (mm)	Stroke range (mm)	A	L	L1
32	20 to 100	52	7	28.5
40	20 to 100	59	7	28.5
50	30 to 100	66.5	8	33.5

∗ All dimensions but A, L and L1 are identical to those of the rod side flange type.

Flange bracket material: Carbon steel
Surface treatment: Nickel plated

Double clevis type: RQD/RDQD

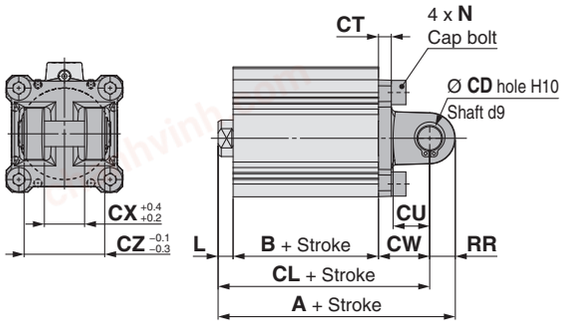

Double Clevis Type

mm

Bore size (mm)	Stroke range (mm)	A	B	CL	CD	CT	CU
32	20 to 100	74	37	64	10	5	14
40	20 to 100	83	44	73	10	6	14
50	30 to 100	99.5	49.5	85.5	14	7	20

mm

Bore size (mm)	CW	CX	CZ	L	L1	N	RR
32	20	18	36	7	28.5	M6 x 1.0	10
40	22	18	36	7	28.5	M6 x 1.0	10
50	28	22	44	8	33.5	M8 x 1.25	14

∗ Double clevis pins and retaining rings are included in the package.
∗ Refer to page 11 for details on rod end nut and accessories.

Double clevis bracket material: Cast iron
Surface treatment: Painted

chanhvinh.com

Dimensions: Ø 63 to Ø 100

∗ For the auto switch mounting position and its mounting height, refer to pages 13 and 14.

Basic type (Through-hole)

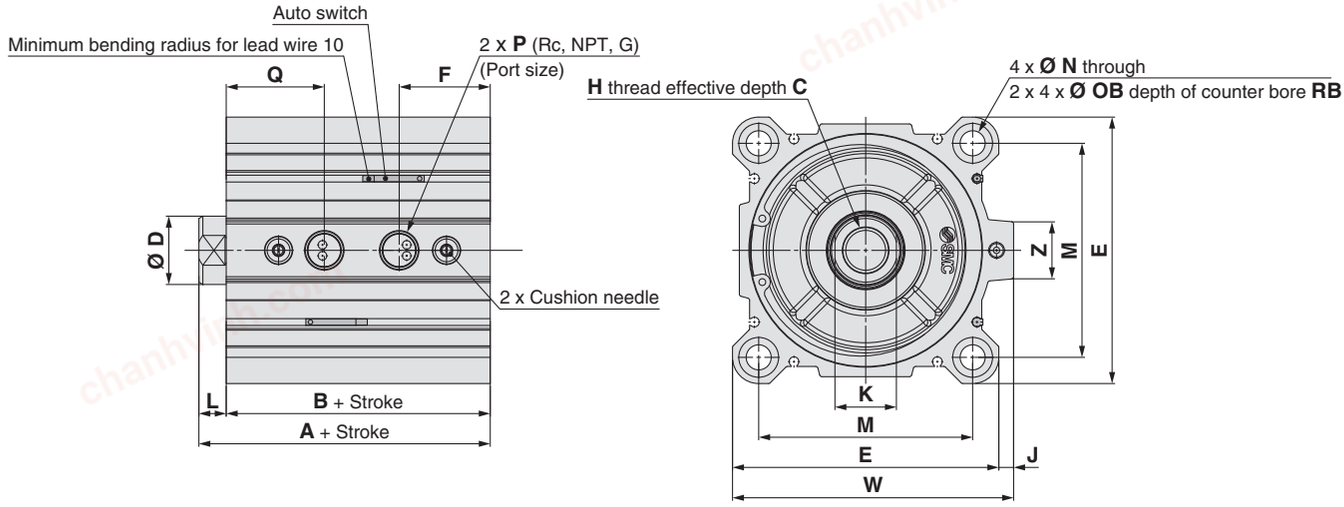

mm

Bore size (mm)	Stroke range (mm)	A	B	C	D	E	F	H	J	K	L	M	N	OB	P
63	30 to 100	63	55	15	20	77	31	M10 x 1.5	7	17	8	60	9	14	1/4
80	40 to 100	73.5	63.5	21	25	98	35.5	M16 x 2.0	6	22	10	77	11	17.5	3/8
100	40 to 100	88	76	27	30	117	40	M20 x 2.5	6.5	27	12	94	11	17.5	3/8

mm

Bore size (mm)	Q	RB	W	Z
63	34	10.5	84	19
80	39	13.5	104	26
100	43	13.5	123.5	26

∗ Refer to page 11 for details on rod end nut and accessories.
• Add the stroke to calculate the length of intermediate strokes.

Both ends tapped type: RQA/RDQA

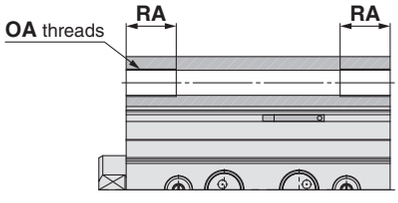

mm

Bore size (mm)	OA	RA
63	M10 x 1.5	18
80	M12 x 1.75	22
100	M12 x 1.75	22

Rod end male thread

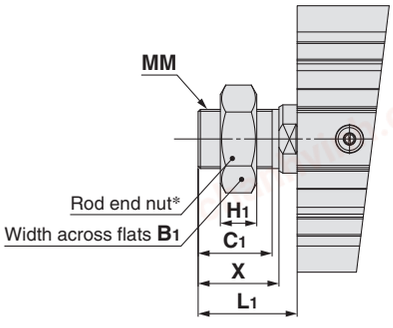

mm

Bore size (mm)	B_1	H_1	C_1	X	MM	L_1
63	27	11	26	28.5	M18 x 1.5	33.5
80	32	13	32.5	35.5	M22 x 1.5	43.5
100	41	16	32.5	35.5	M26 x 1.5	43.5

chanhvinh.com

Series RQ

Mounting Bracket Dimensions

Foot type: RQL/RDQL

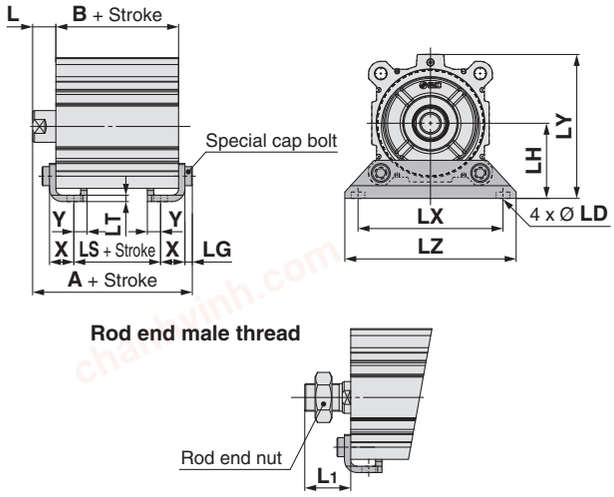

Foot Type mm

Bore size (mm)	Stroke range (mm)	A	B	LS	L	L1	LD	LG	LH	LT
63	30 to 100	81.2	55	29	18	43.5	11	5	46	3.2
80	40 to 100	95	63.5	33.5	20	53.5	13	7	59	4.5
100	40 to 100	111	76	42	22	53.5	13	7	71	6

Bore size (mm)	LX	LY	LZ	X	Y
63	95	91.5	113	16.2	9
80	118	114	140	19.5	11
100	137	136	162	23	12.5

Foot bracket material: Carbon steel
Surface treatment: Nickel plated

Compact foot type: RQLC/RDQLC

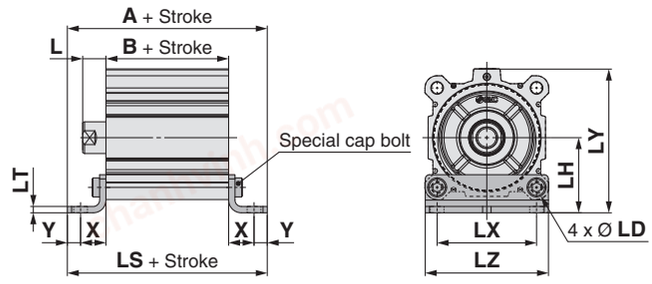

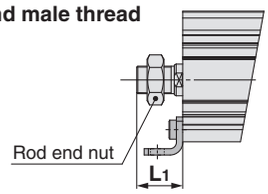

Compact Foot Type mm

Bore size (mm)	Stroke range (mm)	A	B	LS	L	L1	LD	LH	LT
63	30 to 100	109.4	55	91.4	18	43.5	11	46	3.2
80	40 to 100	130.5	63.5	108.5	20	53.5	13	59	4.5
100	40 to 100	149	76	124	22	53.5	13	71	6

Bore size (mm)	LX	LY	LZ	X	Y
63	60	91.5	77	18.2	9
80	77	114	98	22.5	11
100	94	136	117	24	12.5

Foot bracket material: Carbon steel
Surface treatment: Zinc chromated

Rod side flange type: RQF/RDQF

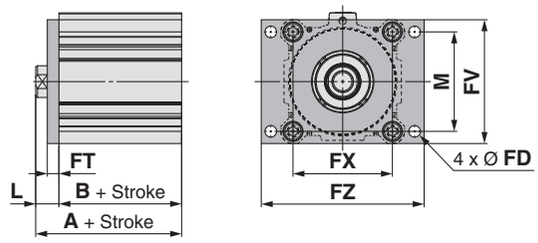

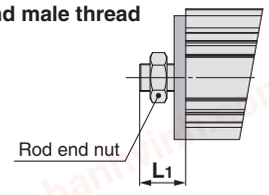

Rod Side Flange Type mm

Bore size (mm)	Stroke range (mm)	A	B	FD	FT	FV	FX	FZ	L	L1	M
63	30 to 100	73	55	9	9	80	92	108	18	43.5	60
80	40 to 100	83.5	63.5	11	11	99	116	134	20	53.5	77
100	40 to 100	98	76	11	11	117	136	154	22	53.5	94

Flange bracket material: Carbon steel
Surface treatment: Nickel plated

chanhvinh.com

Mounting Bracket Dimensions

Head side flange type: RQG/RDQG

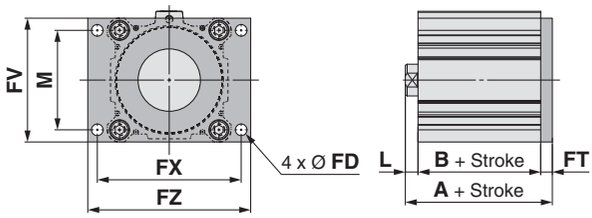

Rod end male thread

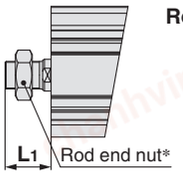

Head Side Flange Type mm

Bore size (mm)	Stroke range (mm)	A	L	L1
63	30 to 100	72	8	33.5
80	40 to 100	84.5	10	43.5
100	40 to 100	99	12	43.5

∗ All dimensions but A, L and L1 are identical to those of the rod side flange type.

Flange bracket material: Carbon steel
Surface treatment: Nickel plated

Double clevis type: RQD/RDQD

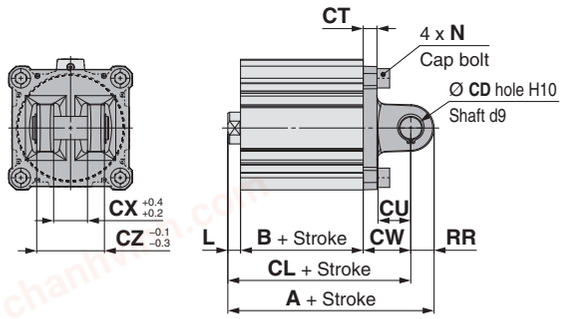

Double Clevis Type mm

Bore size (mm)	Stroke range (mm)	A	B	CL	CD	CT	CU	CW	CX	CZ	L
63	30 to 100	107	55	93	14	8	20	30	22	44	8
80	40 to 100	129.5	63.5	111.5	18	10	27	38	28	56	10
100	40 to 100	155	76	133	22	13	31	45	32	64	12

Bore size (mm)	L1	N	RR
63	33.5	M10 x 1.5	14
80	43.5	M12 x 1.75	18
100	43.5	M12 x 1.75	22

∗ Double clevis pins and retaining rings are included in the package.
∗ Refer to page 11 for details on rod end nut and accessories.

Double clevis bracket material: Cast iron
Surface treatment: Painted

chanhvinh.com

Series RQ

Accessories

Single Knuckle Joint

For I-G02, I-G03

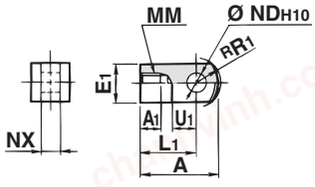

Material: Carbon steel
Surface treatment: Nickel plated

For I-G04, I-G05 I-G08, I-G10

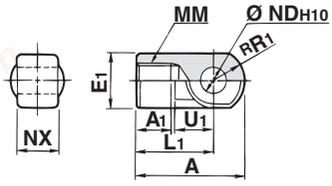

Material: Cast iron
Surface treatment: Nickel plated

mm

Part no.	Applicable bore size (mm)	A	A1	E1	L1	MM	RR1	U1	ND	NX
I-G02	20	34	8.5	□16	25	M8	10.3	11.5	$8^{+0.058}_{0}$	$8^{-0.2}_{-0.4}$
I-G03	25	41	10.5	□20	30	M10 x 1.25	12.8	14	$10^{+0.058}_{0}$	$10^{-0.2}_{-0.4}$
I-G04	32, 40	42	14	Ø 22	30	M14 x 1.5	12	14	$10^{+0.058}_{0}$	$18^{-0.3}_{-0.5}$
I-G05	50, 63	56	18	Ø 28	40	M18 x 1.5	16	20	$14^{+0.070}_{0}$	$22^{-0.3}_{-0.5}$
I-G08	80	71	21	Ø 38	50	M22 x 1.5	21	27	$18^{+0.070}_{0}$	$28^{-0.3}_{-0.5}$
I-G10	100	79	21	Ø 44	55	M26 x 1.5	24	31	$22^{+0.084}_{0}$	$32^{-0.3}_{-0.5}$

Double Knuckle Joint

For Y-G02, Y-G03

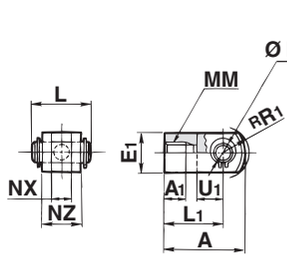

Material: Carbon steel
Surface treatment: Nickel plated

For I-G04, I-G05 I-G08, I-G10

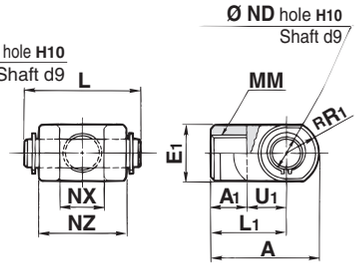

Material: Cast iron
Surface treatment: Nickel plated

mm

Part no.	Applicable bore size (mm)	A	A1	E1	L1	MM	RR1	U1	ND	NX	NZ	L	Applicable pin no.
Y-G02	20	34	8.5	□16	25	M8	10.3	11.5	$8^{+0.058}_{0}$	$8^{+0.4}_{+0.2}$	16	21	IY-G02
Y-G03	25	41	10.5	□20	30	M10 x 1.25	12.8	14	$10^{+0.058}_{0}$	$10^{+0.4}_{+0.2}$	20	25.6	IY-G03
Y-G04	32, 40	42	16	Ø 22	30	M14 x 1.5	12	14	$10^{+0.058}_{0}$	$18^{+0.5}_{+0.3}$	36	41.6	IY-G04
Y-G05	50, 63	56	20	Ø 28	40	M18 x 1.5	16	20	$14^{+0.070}_{0}$	$22^{+0.5}_{+0.3}$	44	50.6	IY-G05
Y-G08	80	71	23	Ø 38	50	M22 x 1.5	21	27	$18^{+0.070}_{0}$	$28^{+0.5}_{+0.3}$	56	64	IY-G08
Y-G10	100	79	24	Ø 44	55	M26 x 1.5	24	31	$22^{+0.084}_{0}$	$32^{+0.5}_{+0.3}$	64	72	IY-G10

∗Knuckle pin and snap ring are included.

Knuckle Pin (common with double clevis pin)

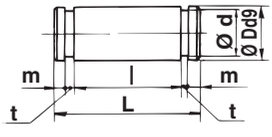

Material: Carbon steel
mm

Part no.	Applicable bore size (mm)	D	L	d	l	m	t	Retaining ring
IY-G02	20	$8^{-0.040}_{-0.076}$	21	7.6	16.2	1.5	0.9	C8 type for pivot
IY-G03	25	$10^{-0.040}_{-0.076}$	25.6	9.6	20.2	1.55	1.15	C10 type for pivot
IY-G04	32,40	$10^{-0.040}_{-0.076}$	41.6	9.6	36.2	1.55	1.15	C10 type for pivot
IY-G05	50,63	$14^{-0.050}_{-0.093}$	50.6	13.4	44.2	2.05	1.15	C14 type for pivot
IY-G08	80	$18^{-0.050}_{-0.093}$	64	17	56.2	2.55	1.35	C18 type for pivot
IY-G10	100	$22^{-0.065}_{-0.117}$	72	21	64.2	2.55	1.35	C22 type for pivot

∗Type C retaining rings for axis are included.

Rod End Nut

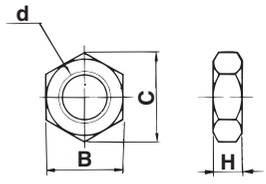

Material: Carbon steel
Surface treatment: Zinc chromated
mm

Part no.	Applicable bore size (mm)	d	H	B	C
NT-02	20	M8	5	13	15.0
NT-03	25	M10 x 1.25	6	17	19.6
NT-04	32, 40	M14 x 1.5	8	22	25.4
NT-05	50, 63	M18 x 1.5	11	27	31.2
NT-08	80	M22 x 1.5	13	32	37.0
NT-10	100	M26 x 1.5	16	41	47.3

chanhvinh.com

Simple Joint/Ø 32 to Ø 100

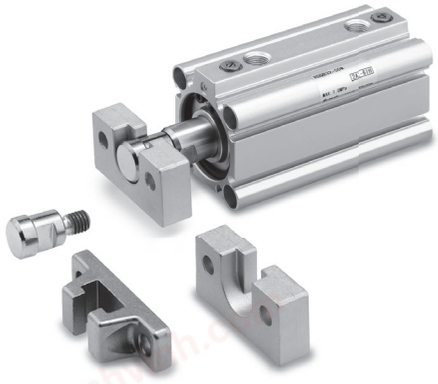

Joint and mounting bracket (A type, B type) part no.

YA — **03**

Applicable air cylinder bore size

03	Ø 32, Ø 40
05	Ø 50, Ø 63
08	Ø 80
10	Ø 100

Mounting bracket

YA	A type mounting bracket
YB	B type mounting bracket
YU	Joint

Allowable eccentricity

mm

Bore size	32	40	50	63	80	100
Eccentricity tolerance	±1				±1.5	±2
Backlash	0.5					

<Ordering method>
•Joints are not included with A type and B type mounting brackets. Order them separately.
(Example)
Bore size Ø 40 Part number
•A type mounting bracket YA-03
•Joint YU-03

Joint part no.

Bore size (mm)	Joint	Applicable mounting bracket		Weight (g)
		A type mounting bracket	B type mounting bracket	
32, 40	**YU-03**	**YA-03**	**YB-03**	25
50, 63	**YU-05**	**YA-05**	**YB-05**	40
80	**YU-08**	**YA-08**	**YB-08**	90
100	**YU-10**	**YA-10**	**YB-10**	160

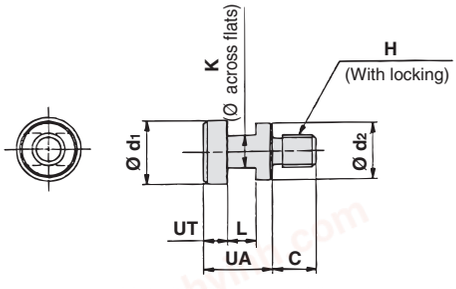

Material: Chrome molybdenum steel (nickel plated)

Part no.	Applicable bore size (mm)	UA	C	d_1	d_2	H	K	L	UT	Weight (g)
YU-03	**32, 40**	17	11	15.8	14	M8	8	7	6	25
YU-05	**50, 63**	17	13	19.8	18	M10	10	7	6	40
YU-08	**80**	22	20	24.8	23	M16	13	9	8	90
YU-10	**100**	26	26	29.8	28	M20	14	11	10	160

A type mounting bracket

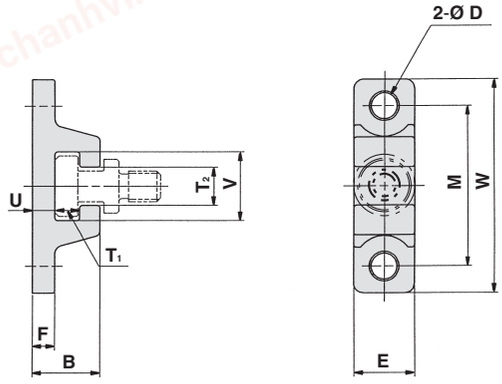

Material: Chrome molybdenum steel (nickel plated)

mm

Part no.	Bore size (mm)	B	D	E	F	M	T_1	T_2
YA-03	**32, 40**	18	6.8	16	6	42	6.5	10
YA-05	**50, 63**	20	9	20	8	50	6.5	12
YA-08	**80**	26	11	25	10	62	8.5	16
YA-10	**100**	31	14	30	12	76	10.5	18

Part no.	Bore size (mm)	U	V	W	Weight (g)
YA-03	**32, 40**	6	18	56	55
YA-05	**50, 63**	8	22	67	100
YA-08	**80**	10	28	83	195
YA-10	**100**	12	36	100	340

B type mounting bracket

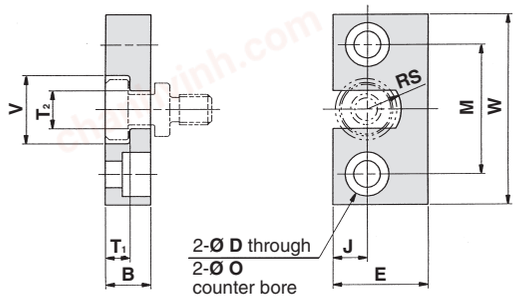

Material: Carbon steel (nickel plated)

mm

Part no.	Bore size (mm)	B	D	E	J	M	O
YB-03	**32, 40**	12	7	25	9	34	11.5 depth 7.5
YB-05	**50, 63**	12	9	32	11	42	14.5 depth 8.5
YB-08	**80**	16	11	38	13	52	18 depth 12
YB-10	**100**	19	14	50	17	62	21 depth 14

Part no.	Bore size (mm)	T_1	T_2	V	W	RS	Weight (g)
YB-03	**32, 40**	6.5	10	18	50	9	80
YB-05	**50, 63**	6.5	12	22	60	11	120
YB-08	**80**	8.5	16	28	75	14	230
YB-10	**100**	10.5	18	36	90	18	455

chanhvinh.com

RQ Series
Auto Switch Mounting 1

Minimum Auto Switch Mounting Stroke

(mm)

No. of auto switch mounted	D-M9□ D-M9□A D-M9□V D-M9□AV D-M9□W D-A9□ D-M9□WV D-A9□V	D-A7□/A80 D-F7□V D-A73C/A80C D-J79C D-A7□H/A80H D-F7□WV D-F7□/J79 D-F7BAV	D-A79W	D-F7□W D-F7NT D-J79W D-F79F D-F7BA	D-P3DWA
1 pc.	15	15	15	20 (15)	15
2 pcs.	15	15	20	20	15

Note) The dimension stated in ( ) shows the minimum mountable stroke when the auto switch does not project from the end face of the cylinder body and the lead wire bending space is not hindered. (Refer to the figure on the right.) Order auto switches and auto switch mounting brackets separately.

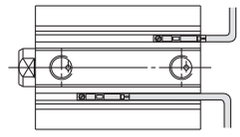

Proper Auto Switch Mounting Position (Detection at stroke end) and Its Mounting Height

Ø 20/Ø 25

D-M9□
D-M9□W
D-M9□A
D-A9□

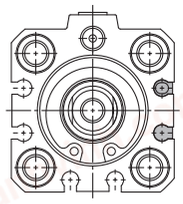

D-M9□V
D-M9□WV
D-M9□AV
D-A9□V

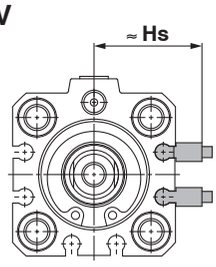

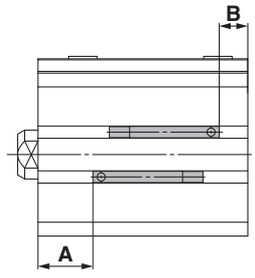

Ø 32 to Ø 100

D-M9□
D-M9□W
D-M9□A
D-A9□

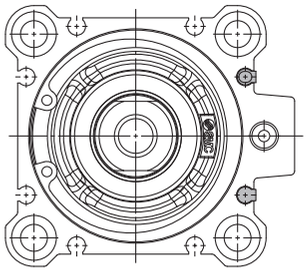

D-M9□V
D-M9□WV
D-M9□AV
D-A9□V

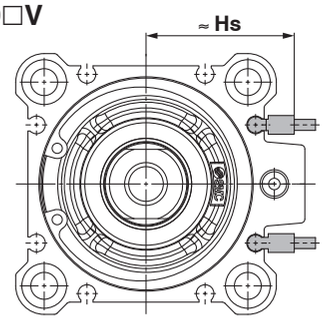

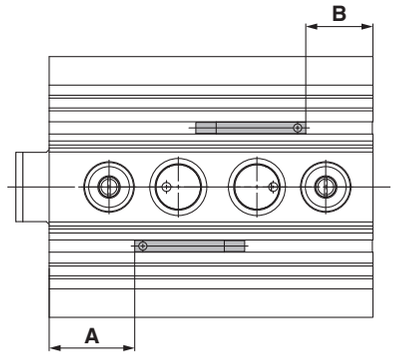

Proper Auto Switch Mounting Positions

(mm)

Auto switch model / Bore size	D-M9□ D-M9□V D-M9□W D-M9□WV D-M9□A D-M9□AV		D-A9□ D-A9□V	
	A	B	A	B
20	13.5	7	9.5	3
25	15	9.5	11	5.5
32	16.5	8.5	12.5	4.5
40	21	11	17	7
50	21	16.5	17	12.5
63	23.5	19.5	19.5	15.5
80	28.5	23	24.5	19
100	35	29	31	25

Auto Switch Mounting Height

(mm)

Auto switch model / Bore size	D-M9□V D-M9□WV D-M9□AV	D-A9□V
	Hs	Hs
20	24.5	22.5
25	26.5	24.5
32	30	27.5
40	32	30
50	37.5	35
63	42.5	40.5
80	51	49
100	59	57

Note) Adjust the auto switch after confirming the operating condition in the actual setting.

chanhvinh.com

Proper Auto Switch Mounting Position (Detection at stroke end) and Its Mounting Height

Ø 32 to Ø 100

D-A7□
D-A80
D-A7□H
D-A80H
D-F7□
D-J79
D-F7□W
D-J79W
D-F79F
D-F7NT
D-F7BA
D-A73C
D-A80C
D-J79C
D-A79W
D-F7□V
D-F7□WV
D-F7BAV

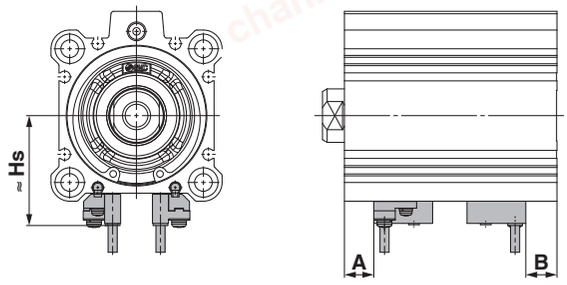

Ø 25
D-P3DWA

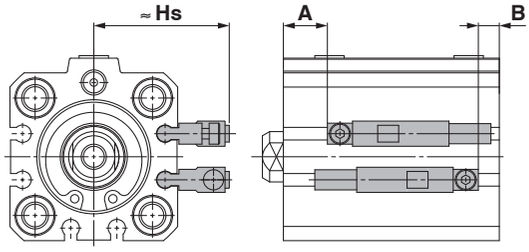

Ø 32 to Ø 100
D-P3DWA

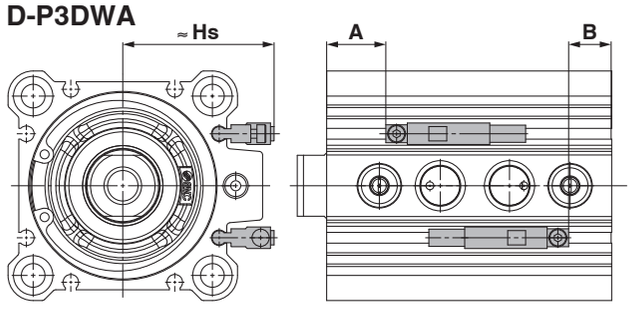

Proper Auto Switch Mounting Position

(mm)

Auto switch model / Bore size	D-A73 D-A80		D-A72/A7□H D-A80H/A73C D-A80C/F7□ D-F7□V/F79F D-J79/J79C D-F7□W D-F7□WV D-J79W D-F7BA D-F7BAV		D-A79W		D-F7NT		D-P3DWA	
	A	B	A	B	A	B	A	B	A	B
20	—	—	—	—	—	—	—	—	—	—
25	—	—	—	—	—	—	—	—	10.5	5
32	13.5	5.5	14	6	11	3	19	11	12	4
40	18	8	18.5	8.5	15.5	5.5	23.5	13.5	16.5	6.5
50	18	13.5	18.5	14	15.5	11	23.5	19	16.5	12
63	20.5	16.5	21	17	18	14	26	22	19	15
80	25.5	20	26	20.5	23	17.5	31	25.5	24	18.5
100	32	26	32.5	26.5	29.5	23.5	37.5	31.5	30.5	24.5

Note 1) Adjust the auto switch after confirming the operating condition in the actual setting.

Auto Switch Mounting Height

(mm)

Auto switch model / Bore size	D-A7□ D-A80	D-F7□ D-J79 D-F7□W D-J79W D-F7BA D-F79F D-F7NT D-A7□H D-A80H	D-F7□V D-F7□WV	D-J79C	D-A73C D-A80C	D-A79W	D-P3DWA
	Hs	Hs	Hs	Hs	Hs	Hs	Hs
20	—	—	—	—	—	—	—
25	—	—	—	—	—	—	33
32	34	36	36.5	39.5	40.5	37.5	35.5
40	37.5	38	40	42.5	43.5	40.5	38
50	43	43.5	45	48	49	46	43
63	48	48.5	50.5	53.5	54.5	51.5	48
80	56.5	57	59	61.5	62.5	49.5	56.5
100	64.5	65.5	67	70	71	68	65

Operating Range

(mm)

Auto switch model	Bore size							
	20	25	32	40	50	63	80	100
D-M9□/M9□V D-M9□W/M9□WV D-M9□A/M9□AV	5.5	6	6	6	7	9.5	10	11
D-A9□/A9□V	10	10	9.5	9.5	9.5	11.5	9	11.5
D-A7□/A80 D-A7□H/A80H D-A73C/A80C	—	—	12	11	10	12	12	13
D-A79W	—	—	6	14	14	16	15	17
D-F7□/F7□V D-J79/J79C/J79W D-F7□W/F7□WV D-F79F/F7BA D-F7BAV/F7NT	—	—	13	6	6	6.5	6.5	7
D-P3DWA	—	6	6	6	6	8.5	9	9

∗ Since the operating range is provided as a guideline including hysteresis, it cannot be guaranteed (assuming approximately ±30 % dispersion). It may vary substantially depending on an ambient environment.

chanhvinh.com

RQ Series
Auto Switch Mounting 2

Auto Switch Mounting Bracket/Part No.

Applicable auto switch	D-M9□/M9□V D-M9□W/M9□WV D-M9□A/M9□AV D-A9□/A9□V	D-F7□/F7□V/J79/J79C/F7□W/J79W/F7□WV D-F7BA/F7BAV/F79F/F7NT D-A7□/A80/A7□H/A80H/A73C/A80C/A79W	D-P3DWA
Bore size (mm)	Ø 20 to Ø 100	Ø 32 to Ø 100	Ø 25 to Ø 100
Auto switch mounting bracket part no.	—	BQ5-032	—
Auto switch mounting bracket fitting parts lineup/Weight	—	• Auto switch fixing screw (M2.5 x 10 L) • Auto switch mounting screw (M3 x 8 L) • Auto switch spacer • Auto switch mounting nut Weight: 3.5 g	—
Auto switch mounting surface	Surfaces with auto switch mounting slot Ø 20, Ø 25 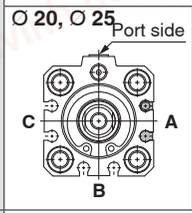 Ø 32 to Ø 100 	A/B/C side except port side 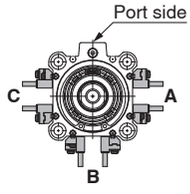	Surfaces with auto switch mounting slot 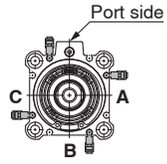
Mounting of auto switch	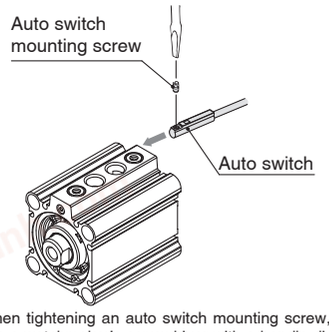 • When tightening an auto switch mounting screw, use a watchmaker's screwdriver with a handle diameter of 5 to 6 mm. **Tightening torque for auto switch mounting screw** [N·m] Auto switch model / Tightening torque D-M9□(V), D-M9□W(V), D-A93: 0.05 to 0.15 D-M9□A(V): 0.05 to 0.10 D-A9□(V) (Excludes the D-A93): 0.10 to 0.20	① Insert the nut into the auto switch mounting slot on the cylinder tube, and place it in the roughly estimated setting position. ② With the lower tapered part of the auto switch spacer facing the outside of the cylinder tube, line up the M2.5 through hole with the M2.5 female thread of the auto switch mounting nut. ③ Gently screw the auto switch mounting nut fixing screw (M2.5) into the thread of the auto switch mounting nut through the mounting hole. ④ Engage the ridge on the auto switch mounting arm with the recess in the auto switch spacer. ⑤ Tighten the auto switch mounting screw (M3) to fix the auto switch. The tightening torque of the M3 screw must be 0.35 to 0.45 N·m. ⑥ Confirm where the mounting position is, and tighten the auto switch fixing screw (M2.5) to fix the auto switch mounting nut. The tightening torque of the M2.5 screw must be 0.25 to 0.35 N·m. ⑦ The detection position can be changed under the conditions in step ⑤. 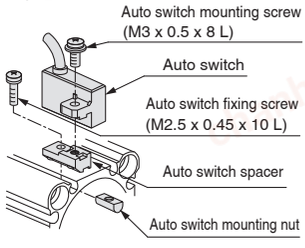	① Insert the mounting bracket into the mating groove of the cylinder tube. ② Check the detecting position of the auto switch and fix the auto switch firmly with the hexagon socket head cap screw (M2.5 x 12 L). ③ If the detecting position is changed, go back to step ①. * Ensure that the auto switch is covered with the mating groove to protect the auto switch. * The tightening torque for the hexagon socket head cap screw (M2.5 x 12 L) is 0.2 to 0.3 N·m. 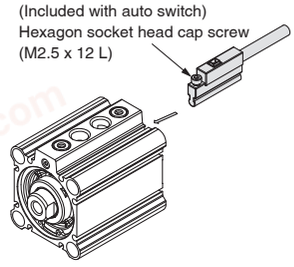

* Auto switch mounting bracket and auto switch are enclosed with the cylinder for shipment.
For an environment that needs the water-resistant auto switch, select the D-M9□A(V) type.
Auto switch mounting bracket for the D-F7BA(V) type uses BQ4-012 and BQ5-032 normal specifications (metal screw).
* D-A7/A8/F7/J7 types cannot be mounted on Ø 20 and Ø 25.

[Stainless Steel Mounting Screw Kit]

The following stainless steel mounting screw kit (with nuts) is available. Use it in accordance with the operating environment. (Since auto switch spacer (for BQ-2) is not included, order BQ-2 separately.)

BBA2: For D-A7/A8/F7/J7 types

The above stainless steel screws are used when a cylinder is shipped with the D-F7BA/F7BAV auto switches.
When only one auto switch is shipped independently, the BBA2 is attached.

* Refer to the **Web Catalog** for details on the BBA2.

Other than the applicable auto switches listed in "How to Order", the following auto switches can be mounted.

Other Applicable Auto Switches

Type	Model	Electrical entry (Fetching direction)	Features
Reed auto switch	D-A73, A72	Grommet (Perpendicular)	—
	D-A80		Without indicator light
	D-A73H, A72H, A76H	Grommet (In-line)	—
	D-A80H		Without indicator light
	D-A79W		Diagnostic indication (2-color indicator)
	D-A73C	Connector (Perpendicular)	—
	D-A80C		Without indicator light

Type	Model	Electrical entry (Fetching direction)	Features
Solid state auto switch	D-F7NV, F7PV, F7BV	Grommet (Perpendicular)	—
	D-F7NWV, F7BWV		Diagnostic indication (2-color indicator)
	D-F7BAV		Water resistance (2-color indicator)
	D-F79, F7P, J79	Grommet (In-line)	—
	D-F79W, F7PW, J79W		Diagnostic indication (2-color indicator)
	D-F7BA		Water resistance (2-color indicator)
	D-F7NT		With timer
	D-F79F		With diagnostic output (2-color indicator)
	D-J79C	Connector (Perpendicular)	—

* For solid state auto switches, auto switches with a pre-wired connector are also available.
* Normally closed (NC = b contact) solid state auto switches (D-M9□E(V)) are also available.
* D-A7/A8/F7/J7 types cannot be mounted on Ø 20 and Ø 25.

chanhvinh.com

Series RQ
Auto Switch Connections and Examples

Basic Wiring

Solid state 3-wire, NPN

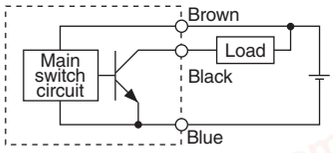

(Power supplies for switch and load are separate.)

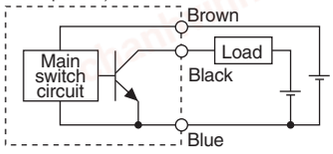

Solid state 3-wire, PNP

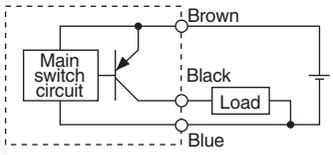

2-wire <Solid state>

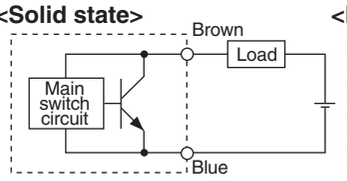

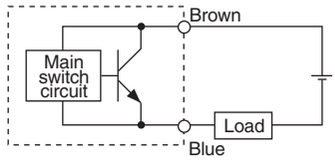

2-wire <Reed switch>

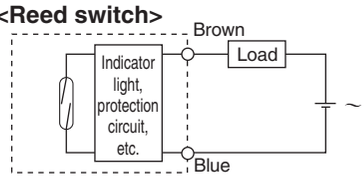

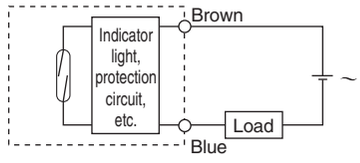

Examples of Connection to PLC

Sink input specifications
3-wire, NPN

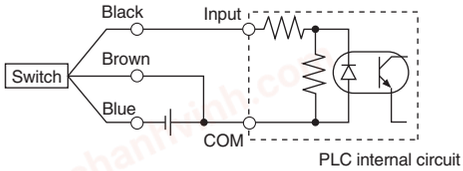

2-wire

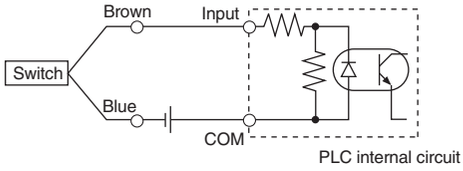

Source input specifications
3-wire, PNP

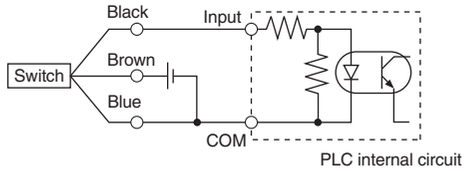

2-wire

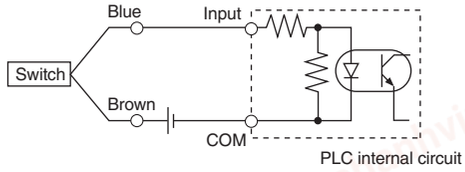

Connect according to the applicable PLC input specifications, as the connection method will vary depending on the PLC input specifications.

Connection Examples for AND (Series) and OR (Parallel)

3-wire

AND connection for NPN output (Using relays)

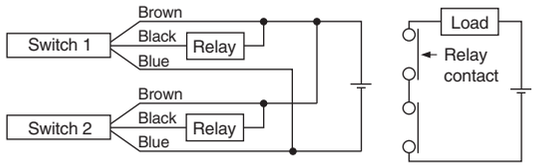

AND connection for NPN output (Performed with switches only)

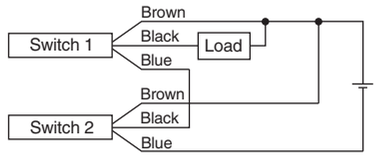

The indicator lights will light up when both switches are turned ON.

OR connection for NPN output

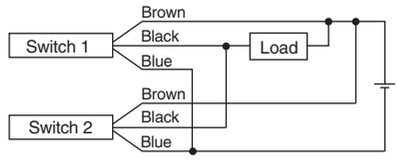

2-wire with 2 switch AND connection

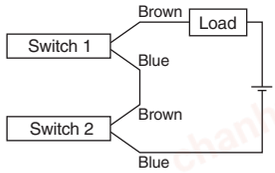

When two switches are connected in series, a load may malfunction because the load voltage will decline when in the ON state.
The indicator lights will light up if both of the switches are in the ON state.

Load voltage at ON = Power supply voltage - Internal voltage drop x 2 pcs.
= 24V - 4V x 2 pcs.
= 16V

Example: Power supply is 24VDC
Internal voltage drop in switch is 4V

2-wire with 2 switch OR connection

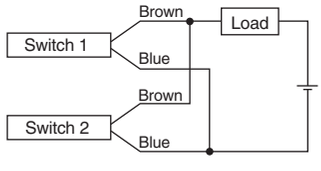

<Solid state>
When two switches are connected in parallel, malfunction may occur because the load voltage will increase when in the OFF state.

Load voltage at OFF = Leakage current x 2 pcs. x Load impedance
= 1mA x 2 pcs. x 3kΩ
= 6V

Example: Load impedance is 3kΩ
Leakage current from switch is 1mA

<Reed switch>
Because there is no current leakage, the load voltage will not increase when turned OFF. However, depending on the number of switches in the ON state, the indicator lights may sometimes dim or not light up, because of dispersion and reduction of the current flowing to the switches.

chanhvinh.com

Series RQ
Safety Instructions

These safety instructions are intended to prevent a hazardous situation and/or equipment damage. These instructions indicate the level of potential hazard by a label of **"Caution", "Warning" or "Danger"**. To ensure safety, be sure to observe ISO 4414 Note 1), JIS B 8370 Note 2) and other safety practices.

⚠ Caution : Operator error could result in injury or equipment damage.

⚠ Warning : Operator error could result in serious injury or loss of life.

⚠ Danger : In extreme conditions, there is a possible result of serious injury or loss of life.

Note 1) ISO 4414: Pneumatic fluid power – Recommendations for the application of equipment to transmission and control systems.

Note 2) JIS B 8370: General Rules for Pneumatic Equipment

⚠ Warning

1. The compatibility of pneumatic equipment is the responsibility of the person who designs the pneumatic system or decides its specifications.

Since the products specified here are used in various operating conditions, their compatibility for the specific pneumatic system must be based on specifications or after analysis and/or tests to meet your specific requirements. The expected performance and safety assurance will be the responsibility of the person who has determined the compatibility of the system. This person should continuously review the suitability of all items specified. Referring to the latest catalogue information with a view to giving due consideration to any possibility of equipment failure when configuring a system.

2. Only trained personnel should operate pneumatically operated machinery and equipment.

Compressed air can be dangerous if an operator is unfamiliar with it. Assembly, handling or repair of pneumatic systems should be performed by trained and experienced operators.

3. Do not service machinery/equipment or attempt to remove components until safety is confirmed.

1. Inspection and maintenance of machinery/equipment should only be performed after confirmation of safe locked-out control positions.
2. When equipment is to be removed, confirm the safety process as mentioned above. Cut the supply pressure for this equipment and exhaust all residual compressed air in the system.
3. Before machinery/equipment is restarted, take measures to prevent shooting-out of cylinder piston rod, etc. (Bleed air into the system gradually to create back pressure.)

4. Contact SMC if the product is to be used in any of the following conditions:

1. Conditions and environments beyond the given specifications, or if product is used outdoors.
2. Installation on equipment in conjunction with atomic energy, railway, air navigation, vehicles, medical equipment, food and beverages, recreation equipment, emergency stop circuits, press applications, or safety equipment.
3. An application which has the possibility of having negative effects on people, property, or animals, requiring special safety analysis.

chanhvinh.com

Series RQ
Actuator Precautions 1

Be sure to read before handling.

Design

⚠ Warning

1. There is a danger of sudden action by air cylinders if sliding parts of machinery are twisted, etc., and changes in forces occur.

In such cases, human injury may occur; e.g., by catching hands or feet in the machinery, or damage to the machinery itself may occur. Therefore, the machine should be designed to avoid such dangers.

2. Attach a protective cover to minimize the risk of human injury.

If a driven object and moving parts of a cylinder pose a danger of human injury, design the structure to avoid contact with the human body.

3. Securely tighten all stationary parts and connected parts so that they will not become loose.

Especially when a cylinder operates with high frequency or is installed where there is a lot of vibration, ensure that all parts remain secure.

4. A deceleration circuit or shock absorber, etc., may be required.

When a driven object is operated at high speed or the load is heavy, a cylinder's cushion will not be sufficient to absorb the impact. Install a deceleration circuit to reduce the speed before cushioning, or install an external shock absorber to relieve the impact. In this case, the rigidity of the machinery should also be examined.

5. Consider a possible drop in circuit pressure due to a power outage, etc.

When a cylinder is used in a clamping mechanism, there is a danger of work pieces dropping if there is a decrease in clamping force due to a drop in circuit pressure caused by a power outage, etc. Therefore, safety equipment should be installed to prevent damage to machinery and/or human injury. Suspension mechanisms and lifting devices also require consideration for drop prevention.

6. Consider a possible loss of power source.

Measures should be taken to protect against human injury and equipment damage in the event that there is a loss of power to equipment controlled by air pressure, electricity or hydraulics, etc.

7. Design circuitry to prevent sudden lurching of driven objects.

When a cylinder is driven by an exhaust center type directional control valve or when starting up after residual pressure is exhausted from the circuit, etc., the piston and its driven object will lurch at high speed if pressure is applied to one side of the cylinder because of the absence of air pressure inside the cylinder. Therefore, equipment should be selected and circuits designed to prevent sudden lurching because, there is a danger of human injury and/or damage to equipment when this occurs.

8. Consider emergency stops.

Design so that human injury and/or damage to machinery and equipment will not be caused when machinery is stopped by a safety device under abnormal conditions, a power outage or a manual emergency stop.

9. Consider the action when operation is restarted after an emergency stop or abnormal stop.

Design the machinery so that human injury or equipment damage will not occur upon restart of operation. When the cylinder has to be reset at the starting position, install safe manual control equipment.

Selection

⚠ Warning

1. Confirm the specifications.

The products advertised in this catalog are designed according to use in industrial compressed air systems. If the products are used in conditions where pressure, temperature, etc., are out of specification, damage and/or malfunction may be caused. Do not use in these conditions. (Refer to specifications.)
Consult SMC if you use a fluid other than compressed air.

2. Intermediate stops

When intermediate stopping of a cylinder piston is performed with a 3 position closed center type directional control valve, it is difficult to achieve stopping positions as accurate and minute as with hydraulic pressure due to the compressibility of air.
Furthermore, since valves and cylinders are not guaranteed for zero air leakage, it may not be possible to hold a stopped position for an extended period of time. Consult SMC if it is necessary to hold a stopped position for an extended period.

⚠ Caution

1. Operate within the limits of the maximum usable stroke.

The piston rod will be damaged if operated beyond the maximum stroke. Operate within the standard stroke range.

2. Operate the piston within a range such that collision damage will not occur at the stroke end.

3. Use a speed controller to adjust the cylinder drive speed, gradually increasing from a low speed to the desired speed setting.

Mounting

⚠ Caution

1. Be certain to align the rod axis with the load and direction of movement when connecting.

When not properly aligned, twisting may occur in the rod and tube, and damage may be caused due to friction on the inner tube surface, bushings, rod surface and seals, etc.

2. When an external guide is used, connect the rod end and the load in such a way that there is no interference at any point within the stroke.

3. Do not scratch or gouge the sliding parts of the cylinder tube or piston rod, etc., by striking or grasping them with other objects.

Cylinder bores are manufactured to precise tolerances, so that even a slight deformation may cause malfunction. Also, scratches or gouges, etc., in the piston rod may lead to damaged seals and cause air leakage.

4. Prevent the seizure of rotating parts.

Prevent the seizure of rotating parts (pins, etc.) by applying grease.

chanhvinh.com

Series RQ
Actuator Precautions 2

Be sure to read before handling.

Mounting

⚠Caution

5. Do not use until you can verify that equip-ment can operate properly.

Following mounting, maintenance or conversions, verify correct mounting by suitable function and leakage tests after compressed air and power are connected

6. Instruction manual

The product should be mounted and operated after thoroughly reading the manual and understanding its contents.
Keep the instruction manual where it can be referred to as needed.

Piping

⚠Caution

1. Preparation before piping

Before piping is connected, it should be thoroughly blown out with air (flushing) or washed to remove chips, cutting oil and other debris from inside the pipe.

2. Wrapping of pipe tape

When screwing together pipes and fittings, etc., be certain that chips from the pipe threads and sealing material do not get inside the piping.
Also, when pipe tape is used, leave 1.5 to 2 thread ridges exposed at the end of the threads.

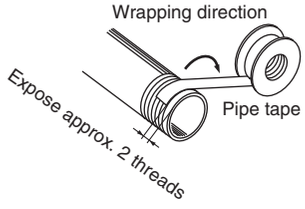

Cushion

⚠Caution

1. Readjust using the cushion needle.

Cushions are adjusted at the time of shipment, however, the cushion needle on the cylinder tube should be readjusted when the product is put into service, based upon factors such as the size of the load and the operating speed. When the cushion needle is turned clockwise, the cushion contracts and its effectiveness is increased.

2. Do not operate with the cushion needle in a fully closed condition.

3. Adjust the cushion needle by gradually opening from the closed condition and set it at a designated cushion speed.

Lubrication

⚠Caution

1. Lubrication of non-lube type cylinder.

The cylinder is lubricated at the factory and can be used without any further lubrication.
However, in the event that it will be lubricated, use class 1 turbine oil (without additives) ISO VG32.
Stopping lubrication later may lead to malfunction due to the loss of the original lubricant. Therefore, lubrication must be continued once it has been started.

Air Supply

⚠Warning

1. Use clean air.

Do not use compressed air that includes chemicals, synthetic oils containing organic solvents, salt or corrosive gases, etc., as it can cause damage or malfunction.

⚠Caution

1. Install air filters.

Install air filters at the upstream side of valves. The filtration degree should be 5m or finer.

2. Install an after-cooler, air dryer or water sep-arator, etc.

Air that includes excessive drainage may cause malfunction of valves and other pneumatic equipment. To prevent this, install an after-cooler, air dryer or water separator, etc.

3. Use the product within the specified range of fluid and ambient temperature.

Take measures to prevent freezing, since moisture in circuits can be frozen below 5 °C, and this may cause damage to seals and lead to malfunction.

Refer to SMC's "Best Pneumatics vol. 4" for further details on compre-ssed air quality.

Operating Environment

⚠Warning

1. Do not use in environments where there is a danger of corrosion.

2. In dusty locations or where water, oil, etc., splash on the equipment, take suitable meas-ures to protect rod.

3. When using auto switches, do not operate in an environment with strong magnetic fields.

chanhvinh.com

Series RQ
Actuator Precautions 2

Be sure to read before handling.

Mounting

⚠Caution

5. Do not use until you can verify that equip-ment can operate properly.

Following mounting, maintenance or conversions, verify correct mounting by suitable function and leakage tests after compressed air and power are connected

6. Instruction manual

The product should be mounted and operated after thoroughly reading the manual and understanding its contents.
Keep the instruction manual where it can be referred to as needed.

Piping

⚠Caution

1. Preparation before piping

Before piping is connected, it should be thoroughly blown out with air (flushing) or washed to remove chips, cutting oil and other debris from inside the pipe.

2. Wrapping of pipe tape

When screwing together pipes and fittings, etc., be certain that chips from the pipe threads and sealing material do not get inside the piping.
Also, when pipe tape is used, leave 1.5 to 2 thread ridges exposed at the end of the threads.

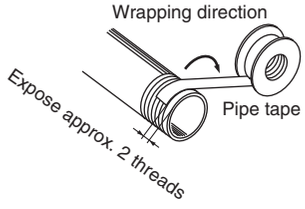

Cushion

⚠Caution

1. Readjust using the cushion needle.

Cushions are adjusted at the time of shipment, however, the cushion needle on the cylinder tube should be readjusted when the product is put into service, based upon factors such as the size of the load and the operating speed. When the cushion needle is turned clockwise, the cushion contracts and its effectiveness is increased.

2. Do not operate with the cushion needle in a fully closed condition.

3. Adjust the cushion needle by gradually opening from the closed condition and set it at a designated cushion speed.

Lubrication

⚠Caution

1. Lubrication of non-lube type cylinder.

The cylinder is lubricated at the factory and can be used without any further lubrication.
However, in the event that it will be lubricated, use class 1 turbine oil (without additives) ISO VG32.
Stopping lubrication later may lead to malfunction due to the loss of the original lubricant. Therefore, lubrication must be continued once it has been started.

Air Supply

⚠Warning

1. Use clean air.

Do not use compressed air that includes chemicals, synthetic oils containing organic solvents, salt or corrosive gases, etc., as it can cause damage or malfunction.

⚠Caution

1. Install air filters.

Install air filters at the upstream side of valves. The filtration degree should be 5m or finer.

2. Install an after-cooler, air dryer or water sep-arator, etc.

Air that includes excessive drainage may cause malfunction of valves and other pneumatic equipment. To prevent this, install an after-cooler, air dryer or water separator, etc.

3. Use the product within the specified range of fluid and ambient temperature.

Take measures to prevent freezing, since moisture in circuits can be frozen below 5C, and this may cause damage to seals and lead to malfunction.

Refer to SMC's "Best Pneumatics vol. 4" for further details on compre-ssed air quality.

Operating Environment

⚠Warning

1. Do not use in environments where there is a danger of corrosion.

2. In dusty locations or where water, oil, etc., splash on the equipment, take suitable meas-ures to protect rod.

3. When using auto switches, do not operate in an environment with strong magnetic fields.

chanhvinh.com

Series RQ
Actuator Precautions 3
Be sure to read before handling.

Maintenance

⚠Warning

1. Perform maintenance according to the proc-edure indicated in the instruction manual.
If handled improperly, malfunction and damage of machinery or equipment may occur.

2. Removal of equipment, and supply/exhaust of compressed air.
When equipment is removed, first check measures to prevent dropping of driven objects and run-away of equipment, etc. Then cut off the supply pressure and electric power, and exhaust all compressed air from the system. When machinery is restarted, proceed with caution after confirming measures to prevent cylinder lurching.

⚠Caution

1. Drain flushing
Remove drainage from air filters regularly.

chanhvinh.com

Series RQ
Auto Switch Precautions 1

Be sure to read before handling.

Design and Selection

⚠Warning

1. Confirm the specifications.

Read the specifications carefully and use this product appropriately. The product may be damaged or malfunction if it is used outside the range of specifications for load current, voltage, temperature or impact.

2. Take precautions when multiple cylinders are used close together.

When multiple auto switch cylinders are used in close proximity, magnetic field interference may cause the switches to malfunction. Maintain a minimum cylinder separation of 40mm.

3. Pay attention to the length of time that a swi-tch is ON at an intermediate stroke position.

When an auto switch is placed at an intermediate position of the stroke and a load is driven at the time the piston passes, the auto switch will operate, but if the speed is too great the operating time will be shortened and the load may not operate properly. The maximum detectable piston speed is:

$$V\ (mm/s) = \frac{\text{Auto switch operating range (mm)}}{\text{Load operating time (ms)}} \times 1000$$

In case of high piston speed, the operating time of the load can be extended by using an auto switch (D-F7NT) with built-in OFF delay timer (approx. 200ms).

4. Keep wiring as short as possible.

<Reed switches>

As the length of the wiring to a load gets longer, the rush current at switching ON becomes greater, and this may shorten the product's life. (The switch will stay ON all the time.)

Use a contact protection box when the wire length is 5m or longer.

<Solid state switches>

Although wire length should not affect switch function, use a wire 100m or shorter.

5. Pay attention to the internal voltage drop of the switch.

<Reed switches>

1) Switches with an indicator light (except D-A76H, A96, A96V)

- If auto switches are connected in series as shown below, take note that there will be a large voltage drop because of internal resistance in the light emitting diodes. (Refer to internal voltage drop in the auto switch specifications.)
  [The voltage drop will be "n" times larger when "n" auto switches are connected.]
  Even though an auto switch operates normally, the load may not operate.

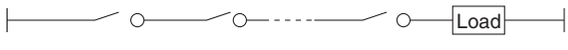

- In the same way, when operating below a specified voltage, alth-ough an auto switch may operate normally, the load may not operate. Therefore, the formula below should be satisfied after confirming the minimum operating voltage of the load.

$$\text{Supply voltage} - \text{Internal voltage drop of switch} > \text{Minimum operating voltage of load}$$

2) If the internal resistance of a light emitting diode causes a problem, select a switch without an indicator light (model D-A80, A80H, A90, A90V).

<Solid state switches>

3) Generally, the internal voltage drop will be greater with a 2-wire solid state auto switch than with a reed switch. Take the same precautions as in 1).
Also, note that a 12VDC relay is not applicable.

6. Pay attention to leakage current.

<Solid state switches>

With a 2-wire solid state auto switch, current (leakage current) flows to the load to operate the internal circuit even when in the OFF state.

Operating current of load (OFF condition) > Leakage current

If the criteria given in the above formula are not met, it will not reset correctly (stays ON). Use a 3-wire switch if this specification will not be satisfied.
Moreover, leakage current flow to the load will be "n" times larger when "n" auto switches are connected in parallel.

7. Do not use a load that generates surge voltage.

<Reed switches>

If driving a load such as a relay that generates a surge voltage, use a contact protection box.

<Solid state switches>

Although a zener diode for surge protection is connected at the output side of a solid state auto switch, damage may still occur if the surge is applied repeatedly. When a load such as a relay or solenoid which generates surge is directly driven, use a type of switch with a built-in surge absorbing element.

8. Cautions for use in an interlock circuit

When an auto switch is used for an interlock signal requiring high reliability, devise a double interlock system to avoid trouble by providing a mechanical protection function, or by also using another switch (sensor) together with the auto switch.
Also perform periodic maintenance and confirm proper operation.

9. Ensure sufficient clearance for maintenance activities.

When designing an application, be sure to allow sufficient clearance for maintenance and inspections.

chanhvinh.com

Series RQ
Auto Switch Precautions 2

Be sure to read before handling.

Mounting and Adjustment

⚠ Warning

1. Do not drop or bump.

Do not drop, bump or apply excessive impacts (300m/s^2 or more for reed switches and 1000m/s^2 or more for solid state switches) while handling. Although the body of the switch may not be damaged, the inside of the switch could be damaged and cause a malfunction.

2. Do not carry a cylinder by the auto switch lead wires.

Never carry a cylinder by its lead wires. This may not only cause broken lead wires, but it may cause internal elements of the switch to be damaged by the stress.

3. Mount switches using the proper tightening torque.

If a switch is tightened beyond the range of tightening torque, the mounting screws, mounting brackets or switch may be damaged.
On the other hand, tightening below the range of tightening torque may allow the switch to slip out of position. (Refer to page 15 for switch mounting instructions and tightening torque.)

4. Mount a switch at the center of the operating range.

Adjust the mounting position of an auto switch so that the piston stops at the center of the operating range (the range in which a switch is ON). (The mounting position shown in the catalog indicates the optimum position at stroke end.) If mounted at the end of the operating range (around the borderline of ON and OFF), operation may be unstable.

Wiring

⚠ Warning

1. Avoid repeatedly bending or stretching lead wires.

Broken lead wires can result from wiring patterns which repeatedly apply bending stress or stretching force to the lead wires.

2. Be sure to connect the load before power is applied.

<2-wire system>
If the power is turned ON when an auto switch is not connected to a load, the switch will be instantly damaged because of excess current.

3. Confirm proper insulation of wiring.

Be certain that there is no faulty wiring insulation (contact with other circuits, ground fault, improper insulation between terminals, etc.) Damage may occur due to excess current flow into a switch.

4. Do not wire with power lines or high voltage lines.

Wire separately from power lines or high voltage lines, avoiding parallel wiring or wiring in the same conduit with these lines. Control circuits containing auto switches may malfunction due to noise from these other lines.

Wiring

⚠ Warning

5. Do not allow short circuit of loads.

<Reed switches>
If the power is turned ON with a load in a short circuited condition, the switch will be instantly damaged because of excess current flow into the switch.

<Solid state switches>
D-M9BAL and all models of PNP output type switches do not have built-in short circuit protection circuits.
Note that if a load is short circuited, the switch will be instantly damaged as in the case of reed switches.

∗Take special care to avoid reverse wiring of the brown [red] power supply line and the black [white] output line on 3-wire type switches.

6. Avoid incorrect wiring.

<Reed switches>
A 24VDC switch with indicator light has polarity. The brown [red] lead wire is (+), and the blue [black] lead wire is (–).

1) If connections are reversed, a switch will operate, however, the light emitting diode will not light up.
Also note that a current greater than that specified will damage a light emitting diode and it will no longer operate.
Applicable models: D-A73/A73H/A73C/A93/A93V

2) Note however, that in the case of 2-color display auto switches (D-A79W), the switch will be in a normally ON condition if the wiring is reversed.

<Solid state switches>

1) If connections are reversed on a 2-wire type switch, the switch will not be damaged if protected by a protection circuit, but the switch will always stay in an ON state. However, it is still necessary to avoid reversed connections, since the switch could be damaged by a load short circuit in this condition.

∗2) If connections are reversed (power supply line + and power supply line –) on a 3-wire type switch, the switch will be protected by a protection circuit. However, if the power supply line (+) is connected to the blue [black] wire and the power supply line (–) is connected to the black [white] wire, the switch will be damaged.

∗ Lead wire colour changes

Lead wire colours of SMC switches have been changed in order to meet NECA Standard 0402 for production beginning September, 1996 and thereafter. Please refer to the tables provided.
Special care should be taken regarding wire polarity during the time that the old colours still coexist with the new colours.

2-wire

	Old	New
Output (+)	Red	Brown
Output (–)	Black	Blue

3-wire

	Old	New
Power supply	Red	Brown
GND	Black	Blue
Output	White	Black

Solid state with diagnostic output

	Old	New
Power supply	Red	Brown
GND	Black	Blue
Output	White	Black
Diagnostic output	Yellow	Orange

Solid state with latch type diagnostic output

	Old	New
Power supply	Red	Brown
GND	Black	Blue
Output	White	Black
Latch type diagnostic output	Yellow	Orange

chanhvinh.com

Series RQ
Auto Switch Precautions 3

Be sure to read before handling.

Operating Environment

⚠Warning

1. Never use in an atmosphere of explosive gases.

The construction of auto switches is not intended to prevent explosion. Never use in an atmosphere with an explosive gas since this may cause a serious explosion.

2. Do not use in an area where a magnetic field is generated.

Auto switches can malfunction or magnets inside cylinders can become demagnetized. (Consult SMC regarding the availability of a magnetic field resistant auto switch.)

3. Do not use in an environment where the auto switch will be continually exposed to water.

Although switches satisfy IEC standard IP67 construction (JIS C 0920: watertight construction), avoid using switches in applications where continually exposed to water splash or spray. Poor insulation or swelling of the potting resin inside switches may cause malfunction.

4. Do not use in an environment with oil or che-micals.

Consult SMC if auto switches will be used in an environment with coolant, cleaning solvent, various oils or chemicals. If auto switches are used under these conditions for even a short time, they may be adversely affected by improper insulation, malfunction due to swelling of the potting resin, or hardening of the lead wires.

5. Do not use in an environment with tempe-rature cycles.

Consult SMC if switches are used where there are temperature cycles other than normal air temperature changes, as there may be adverse effects inside the switches.

6. Do not use in an environment where there is excessive impact shock.

<Reed switches>

When excessive impact (300m/s^2 or more) is applied to a reed switch during operation, the contact point will malfunction and generate or cut off a signal momentarily (1ms or less). Consult SMC regarding the need to use a solid state switch depending upon the environment.

7. Do not use in an area where surges are gen-erated.

<Solid state switches>

When there are units (solenoid type lifter, high frequency induction furnace, motor, etc.) which generate a large amount of surge in the area around cylinders with solid state auto switches, this may cause deterioration or damage to the switches. Avoid sources of surge generation and crossed lines.

8. Avoid accumulation of iron waste or close contact with magnetic substances.

When a large amount of iron waste such as machining chips or spatter is accumulated, or a magnetic substance (something attracted by a magnet) is brought into close proximity with an auto switch cylinder, it may cause auto switches to malfunction due to a loss of the magnetic force inside the cylinder.

Maintenance

⚠Warning

1. Perform the following maintenance periodi-cally in order to prevent possible danger due to unexpected auto switch malfunction.

1) Securely tighten switch mounting screws.
If screws become loose or the mounting position is dislocated, retighten them after readjusting the mounting position.

2) Confirm that there is no damage to lead wires.
To prevent faulty insulation, replace switches or repair lead wires, etc., if damage is discovered.

3) Confirm the lighting of the green light on the 2-color display type switch.
Confirm that the green LED is on when stopped at the established position. If the red LED is on, the mounting position is not appropriate. Readjust the mounting position until the green LED lights up.

Other

⚠Warning

1. Consult SMC concerning water resistance, elasticity of lead wires, and usage at welding sites, etc.

chanhvinh.com

Series RQ
Specific Product Precautions

Be sure to read before handling.

Refer to pages 17 through 23 for safety instructions, actuator precautions and auto switch precautions.

Installation and Removal of Snap Ring

⚠Caution

1. Use appropriate pliers (C type snap ring installing tool) for installation and removal.

2. Even when using appropriate pliers (C type snap ring installing tool), proceed with caution as there is a danger of the snap ring flying off the end of the pliers (C type snap ring installing tool) and causing human injury or damage to nearby equipment. After installation, con-firm that the snap ring is securely seated into the snap ring groove before supplying air.

Selection

⚠Caution

1. Operate the cylinder to the stroke end.

When the stroke is restricted by an external stopper or a clamped work piece, satisfactory cushioning and noise reduction may not be achieved.

2. Strictly observe the limiting ranges for load weight and maximum speed (graph 1). Also, the limiting ranges are based on operation of the cylinder to the stroke end and proper adjustment of the cushion needle.

If operated beyond the limiting ranges, excessive impact will occur and this may cause damage to equipment.

Graph 1

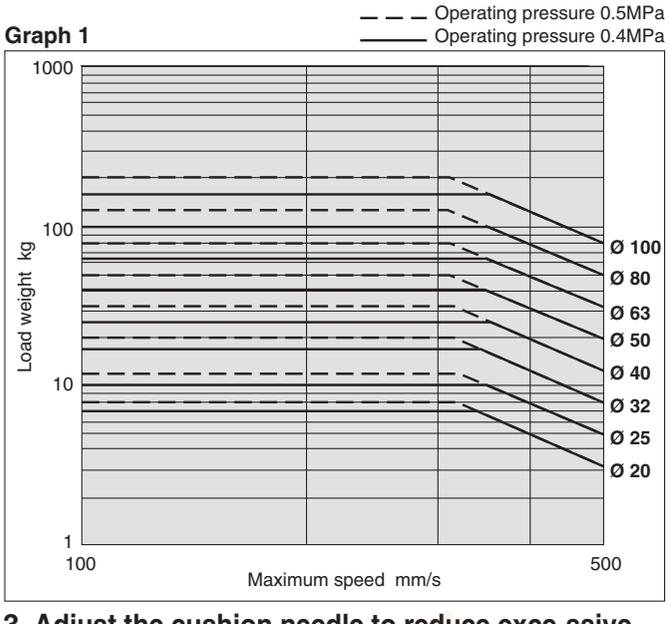

3. Adjust the cushion needle to reduce exce-ssive kinetic energy from the piston impact at the stroke end by absorbing enough kinetic energy during the cushion stroke.

If the piston impacts the stroke end with excessive kinetic energy (values in Table 1 or more), an excessive impact will occur and this may cause damage to equipment.

Table 1. Allowable kinetic energy at piston impact Unit: [J]

	20	25	32	40	50	63	80	100
Piston speed	50 to 500mm/s							
Allowable kinetic energy	0.055	0.09	0.15	0.26	0.46	0.77	1.30	2.27

Selection

⚠Caution

4. Strictly observe the limiting ranges for the piston rod lateral load (graph 2).

If operated beyond the limiting ranges, this may cause the equipment life to be reduced or damage to equipment may occur.

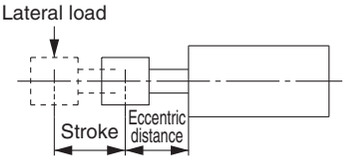

Graph 2

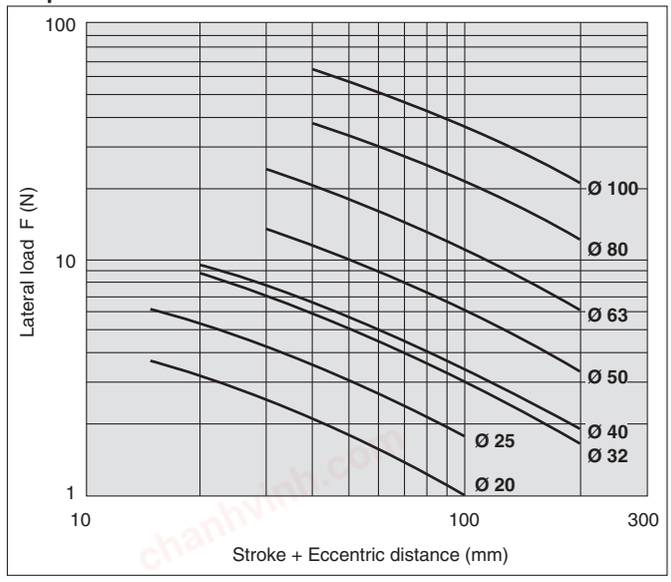

Cushion Needle Adjustment

⚠Caution

1. Readjust with a Cushion Needle

When the product is shipped, the cushion needle is open 1/4 to 1/2 turn from the fully closed position. Readjust the position depending on the load or operating speed before using. Note that the needle must be fully closed first, and then gradually reopened when adjusting.

2. Keep the adjustment range for the cushion needle between the closed position and the rotations shown below.

	Rotations
Ø 20 to Ø 100	2.5 rotations or less

Use a 3 mm flat head watchmakers screw driver to adjust the cushion needle. The adjustment range for the cushion needle must be between the closed position and the open position ranges above. A retaining mechanism prevents the cushion needle from coming out, however, it may spring out during operation if it is rotated beyond the ranges shown above.

chanhvinh.com

⚠ Safety Instructions

These safety instructions are intended to prevent hazardous situations and/or equipment damage. These instructions indicate the level of potential hazard with the labels of **"Caution," "Warning"** or **"Danger."** They are all important notes for safety and must be followed in addition to International Standards (ISO/IEC) [1], and other safety regulations.

⚠ **Caution:**	**Caution** indicates a hazard with a low level of risk which, if not avoided, could result in minor or moderate injury.
⚠ **Warning:**	**Warning** indicates a hazard with a medium level of risk which, if not avoided, could result in death or serious injury.
⚠ **Danger:**	**Danger** indicates a hazard with a high level of risk which, if not avoided, will result in death or serious injury.

1) ISO 4414: Pneumatic fluid power – General rules relating to systems.
ISO 4413: Hydraulic fluid power – General rules relating to systems.
IEC 60204-1: Safety of machinery – Electrical equipment of machines. (Part 1: General requirements)
ISO 10218-1: Manipulating industrial robots - Safety.
etc.

⚠ Warning

1. The compatibility of the product is the responsibility of the person who designs the equipment or decides its specifications.
Since the product specified here is used under various operating conditions, its compatibility with specific equipment must be decided by the person who designs the equipment or decides its specifications based on necessary analysis and test results. The expected performance and safety assurance of the equipment will be the responsibility of the person who has determined its compatibility with the product. This person should also continuously review all specifications of the product referring to its latest catalogue information, with a view to giving due consideration to any possibility of equipment failure when configuring the equipment.

2. Only personnel with appropriate training should operate machinery and equipment.
The product specified here may become unsafe if handled incorrectly. The assembly, operation and maintenance of machines or equipment including our products must be performed by an operator who is appropriately trained and experienced.

3. Do not service or attempt to remove product and machinery/ equipment until safety is confirmed.
1. The inspection and maintenance of machinery/equipment should only be performed after measures to prevent falling or runaway of the driven objects have been confirmed.
2. When the product is to be removed, confirm that the safety measures as mentioned above are implemented and the power from any appropriate source is cut, and read and understand the specific product precautions of all relevant products carefully.
3. Before machinery/equipment is restarted, take measures to prevent unexpected operation and malfunction.

4. Contact SMC beforehand and take special consideration of safety measures if the product is to be used in any of the following conditions.
1. Conditions and environments outside of the given specifications, or use outdoors or in a place exposed to direct sunlight.
2. Installation on equipment in conjunction with atomic energy, railways, air navigation, space, shipping, vehicles, military, medical treatment, combustion and recreation, or equipment in contact with food and beverages, emergency stop circuits, clutch and brake circuits in press applications, safety equipment or other applications unsuitable for the standard specifications described in the product catalogue.
3. An application which could have negative effects on people, property, or animals requiring special safety analysis.
4. Use in an interlock circuit, which requires the provision of double interlock for possible failure by using a mechanical protective function, and periodical checks to confirm proper operation.

⚠ Caution

1. The product is provided for use in manufacturing industries.
The product herein described is basically provided for peaceful use in manufacturing industries.
If considering using the product in other industries, consult SMC beforehand and exchange specifications or a contract if necessary.
If anything is unclear, contact your nearest sales branch.

Limited warranty and Disclaimer/Compliance Requirements

The product used is subject to the following "Limited warranty and Disclaimer" and "Compliance Requirements".Read and accept them before using the product.

Limited warranty and Disclaimer

1. The warranty period of the product is 1 year in service or 1.5 years after the product is delivered, whichever is first. [2] Also, the product may have specified durability, running distance or replacement parts. Please consult your nearest sales branch.
2. For any failure or damage reported within the warranty period which is clearly our responsibility, a replacement product or necessary parts will be provided. This limited warranty applies only to our product independently, and not to any other damage incurred due to the failure of the product.
3. Prior to using SMC products, please read and understand the warranty terms and disclaimers noted in the specified catalogue for the particular products.

2) Vacuum pads are excluded from this 1 year warranty.
A vacuum pad is a consumable part, so it is warranted for a year after it is delivered. Also, even within the warranty period, the wear of a product due to the use of the vacuum pad or failure due to the deterioration of rubber material are not covered by the limited warranty.

Compliance Requirements

1. The use of SMC products with production equipment for the manufacture of weapons of mass destruction (WMD) or any other weapon is strictly prohibited.
2. The exports of SMC products or technology from one country to another are governed by the relevant security laws and regulations of the countries involved in the transaction. Prior to the shipment of a SMC product to another country, assure that all local rules governing that export are known and followed.

⚠ Caution

SMC products are not intended for use as instruments for legal metrology.
Measurement instruments that SMC manufactures or sells have not been qualified by type approval tests relevant to the metrology (measurement) laws of each country.
Therefore, SMC products cannot be used for business or certification ordained by the metrology (measurement) laws of each country.

chanhvinh.com

SMC Corporation (Europe)

Austria	+43 (0)2262622800	www.smc.at	office@smc.at
Belgium	+32 (0)33551464	www.smc.be	info@smc.be
Bulgaria	+359 (0)2807670	www.smc.bg	office@smc.bg
Croatia	+385 (0)13707288	www.smc.hr	office@smc.hr
Czech Republic	+420 541424611	www.smc.cz	office@smc.cz
Denmark	+45 70252900	www.smcdk.com	smc@smcdk.com
Estonia	+372 651 0370	www.smcee.ee	info@smcee.ee
Finland	+358 207513513	www.smc.fi	smcfi@smc.fi
France	+33 (0)164761000	www.smc-france.fr	supportclient@smc-france.fr
Germany	+49 (0)61034020	www.smc.de	info@smc.de
Greece	+30 210 2717265	www.smchellas.gr	sales@smchellas.gr
Hungary	+36 23513000	www.smc.hu	office@smc.hu
Ireland	+353 (0)14039000	www.smcautomation.ie	sales@smcautomation.ie
Italy	+39 03990691	www.smcitalia.it	mailbox@smcitalia.it
Latvia	+371 67817700	www.smc.lv	info@smc.lv
Lithuania	+370 5 2308118	www.smclt.lt	info@smclt.lt
Netherlands	+31 (0)205318888	www.smc.nl	info@smc.nl
Norway	+47 67129020	www.smc-norge.no	post@smc-norge.no
Poland	+48 222119600	www.smc.pl	office@smc.pl
Portugal	+351 214724500	www.smc.eu	apoioclientept@smc.smces.es
Romania	+40 213205111	www.smcromania.ro	smcromania@smcromania.ro
Russia	+7 (812)3036600	www.smc.eu	sales@smcru.com
Slovakia	+421 (0)413213212	www.smc.sk	office@smc.sk
Slovenia	+386 (0)73885412	www.smc.si	office@smc.si
Spain	+34 945184100	www.smc.eu	post@smc.smces.es
Sweden	+46 (0)86031240	www.smc.nu	smc@smc.nu
Switzerland	+41 (0)523963131	www.smc.ch	info@smc.ch
Turkey	+90 212 489 0 440	www.smcturkey.com.tr	info@smcturkey.com.tr
UK	+44 (0)845 121 5122	www.smc.uk	sales@smc.uk
South Africa	+27 10 900 1233	www.smcza.co.za	zasales@smcza.co.za

Printing BU 00 Printed in Spain

Specifications are subject to change without prior notice and any obligation on the part of the manufacturer