chanhvinh.com

5 Port Solenoid Valve

Metal Seal / Rubber Seal

RoHS compliant

Power saving

Standard: 0.4 W
(Reduced by 60% compared to existing model)

High-pressure (1 MPa, Metal seal): 0.95 W



Series VQ1000/2000

SMC

CAT.EUS11-100A-UK

chanhvinh.com

5 Port Solenoid Valve *Series* VQ

Space-saving profile

All pilot valves are compactly mounted on one side. The space-saving design of mounting all fittings on one side permits mounting in three directions.

The non-bias, one-clamp structure permits easy valve replacement.

Built-in one-touch fittings for easy piping

Slide locking type manual override provided

Manual override cannot be pushed by sliding the switch, to prevent malfunction.

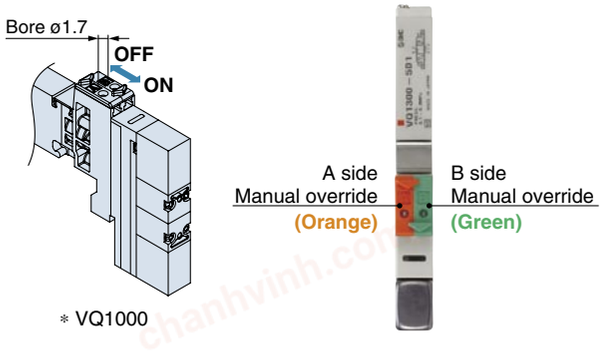

∗ VQ1000

Thin compact design with high flow capacity

Model	Manifold pitch (mm)	Flow-rate characteristics		Applicable cylinder bore size
		Metal seal	Rubber seal	
		C [dm³/(s·bar)]	C [dm³/(s·bar)]	
VQ1000	10.5	0.72	1.0	Up to ø50
VQ2000	16	2.6	3.2	Up to ø80

Note) Flow-rate characteristics: 4/2 → 5/3 (A/B → R1/R2)

A wide variety of optinal parts (The photo does not show an actual use example.)

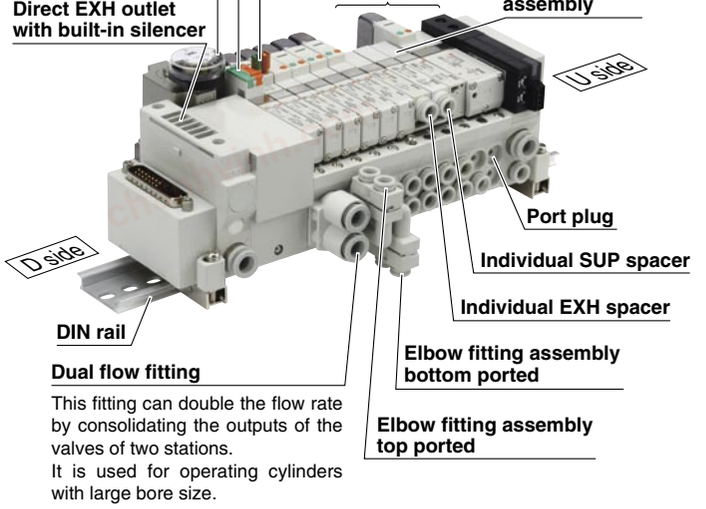

Valve Specifications



			Sonic conductance C [dm³/(s·bar)] 4/2 → 5/3 (A/B → R1/R2)		Type of actuation					Voltage	Electrical entry				Manual override			
			Double	3-position (Closed centre)	Single	Double	Closed centre	Exhaust centre	Pressure centre	12 VDC 24 VDC	Plug-in	Grommet	L-type plug connector	M-type plug connector	Non-locking push type (Tool required)	Locking type (Tool required)	Locking type (Manual)	Slide locking type (Manual)
Base Mounted	Plug-in	*Series VQ1000* P. 7	Metal seal VQ1□00	0.72	0.72	●	●	●	●	●	●	●				●	●	●	●
			Rubber seal VQ1□01	1.0	0.65														
		Series VQ2000 P. 11	Metal seal VQ2□00	2.6	2.0	●	●	●	●	●	●	●				●	●	●	●
			Rubber seal VQ2□01	3.2	2.2														
						P. 15													

chanhvinh.com


Series VQ1000


Series VQ2000

A variety of common wiring methods are standardized.

F kit (D-sub connector)
Number of pins: 15/25

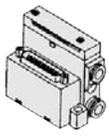
Top entry

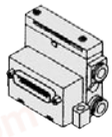
Side entry

P kit (Flat ribbon cable)
Number of pins: 10/16/20/26

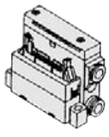
Top entry

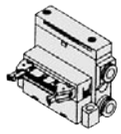
Side entry

J kit (PC Wiring System compliant Flat ribbon cable)
Number of pins: 20

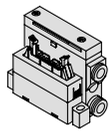
Top entry

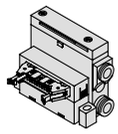
Side entry

G kit (Flat ribbon cable with terminal block)
Number of pins: 20

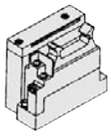

T kit (Terminal block box)

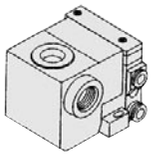

L kit (Lead wire)

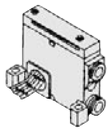

S kit (Serial transmission)

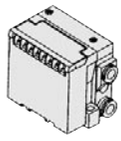

M kit (Circular connector)

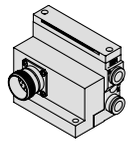
(VQ2000 only)

Dual 3-port valves, 4 positions

Rubber seal only

- Two 3-port valves built into one body.
- The 3-port valves on the A and B sides can operate independently.
- When used as 3 port valves, only half the number of stations is required.
- Can also be used as a 4-position, 5-port type valve.

Exhaust centre : **VQ1A01**
: **VQ2A01**
Pressure centre : **VQ1B01**
: **VQ2B01**

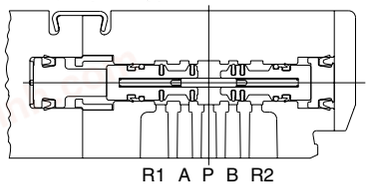

Model	A side	B side	JIS symbol
VQ1A01 VQ2A01	N.C. valve	N.C. valve	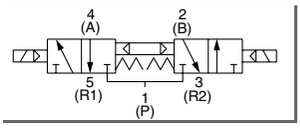
VQ1B01 VQ2B01	N.O. valve	N.O. valve	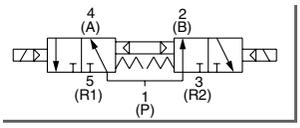
VQ1C01 VQ2C01	N.C. valve	N.O. valve	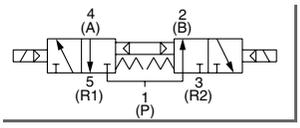

Semi-standard / Options

Semi-standard						Options												
External pilot	D-sub connector 15P	Flat ribbon cable 10P/16P/20P	Negative COM specifications	Inch-size one-touch fittings	Special wiring specifications	Blanking plate	Individual SUP/EXH spacer	SUP/EXH block plate	Name plate	Back pressure check valve	DIN rail mounting	Built-in silencer	Silencer for EXH port	Elbow fitting for cylinder port	Dual flow fitting	Plug for cylinder port	Regulator unit	Ejector unit	Double check block (Separated)
●	●	●	Except S/G kit ●	●	Except L kit ●	●	●	●	●	●	●	●	●	●	●	●	●	●	●
P. 55						P. 65													
●	●	●	Except S/G kit ●	●	Except L kit ●	●	●	●	●	●	●	●	●	●	●	●			●
P. 55						P. 69													

chanhvinh.com

Series VQ/Base Mounted: Variations

Manifold Variations

	Plug-in	
	Series VQ1000	***Series VQ2000***
F kit **D-sub connector** Conforming to with MIL D-sub connector	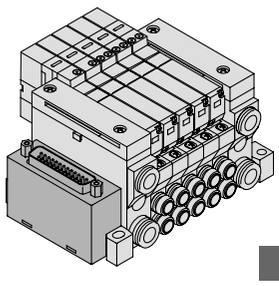 P. 17	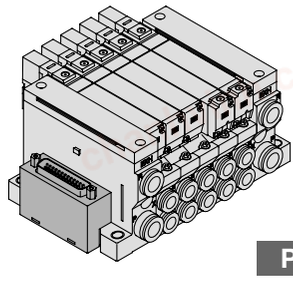 P. 17
P kit **Flat ribbon cable (26/20/16/10 pins)** Conforming to MIL flat ribbon cable connector	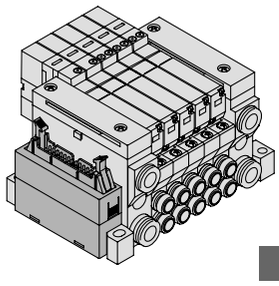 P. 21	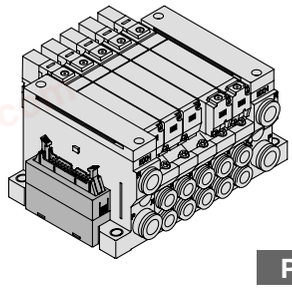 P. 21
J kit **Flat ribbon cable (20 pins)** Conforming to MIL flat ribbon cable connector PC Wiring System compatible		
G kit **Flat ribbon cable with terminal block** Conforming to MIL flat ribbon cable connector Applicable to OMRON's serial transmission unit PC Wiring System compatible	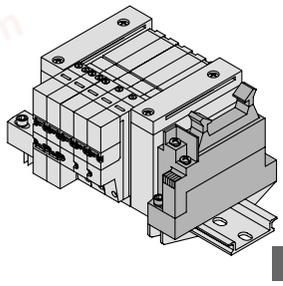 P. 29	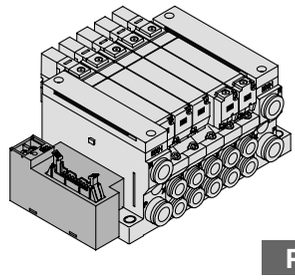 P. 29
T kit **Terminal block box (Terminal block)** Terminal block is compactly arranged on one side.	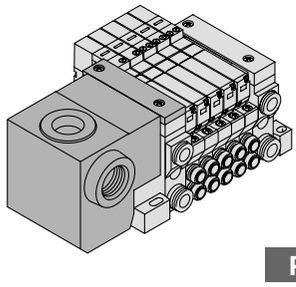 P. 33	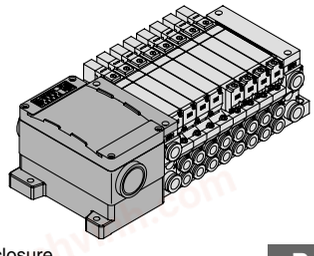 IP65 enclosure compatible P. 33
L kit **Lead wire** Direct electrical entry type	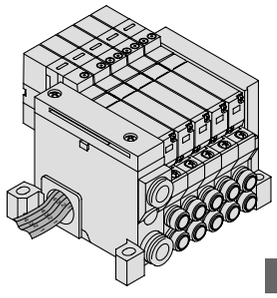 P. 37	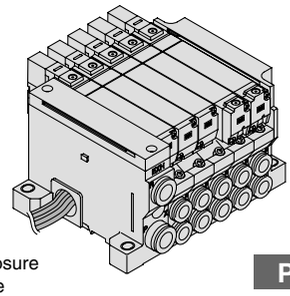 IP65 enclosure compatible P. 37

chanhvinh.com

Manifold Variations

	Plug-in	
	Series VQ1000	***Series VQ2000***
Gateway-type serial transmission system Serial unit: EX510	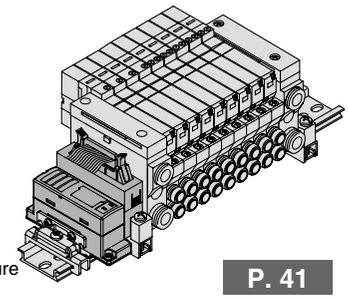 IP20 enclosure compliant P. 41	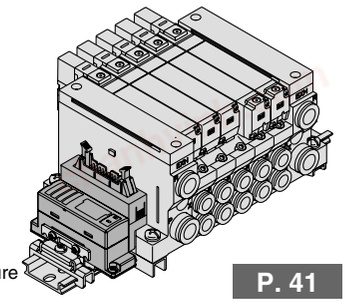 IP20 enclosure compliant P. 41
S kit **Integrated-type serial transmission system (for Output)** Serial unit: EX120 /124	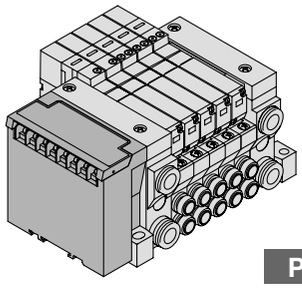 P. 45	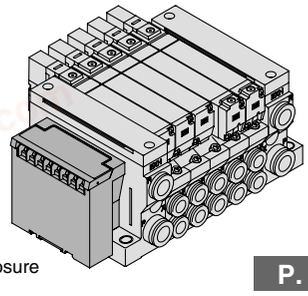 IP20 enclosure compliant P. 45
	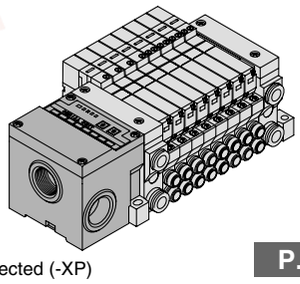 Dust-protected (-XP) P. 45	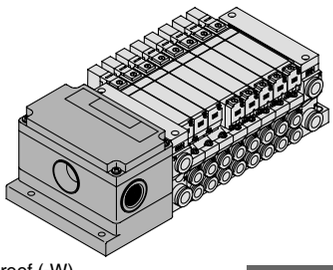 Dust-tight, Water-jet-proof (-W) IP65 enclosure compliant P. 45
Integrated-type serial transmission system (for I/O) Serial unit: EX240	—	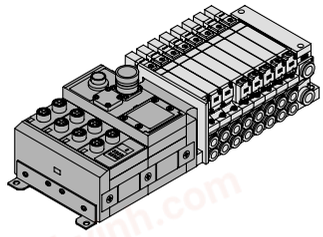 IP65 enclosure compliant P. 49
M kit **Circular connector** IP65 (Dust-tight, Water-jet-proof)	—	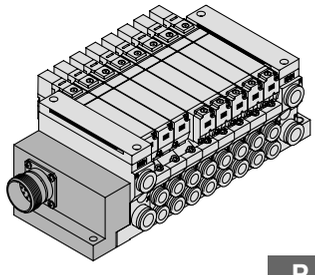 W type only P. 51

chanhvinh.com

Cylinder Speed Chart

This chart is provided as guidelines only.
For performance under various conditions, use SMC's Model Selection Program before making a judgment.

Series	Average speed (mm/s)	Bore size											
		Series CJ2 Pressure 0.5 MPa Load factor 50% Stroke 60 mm			Series CM2 Pressure 0.5 MPa Load factor 50% Stroke 300 mm				Series MB, CA2 Pressure 0.5 MPa Load factor 50% Stroke 500 mm				
		ø6	ø10	ø16	ø20	ø25	ø32	ø40	ø40	ø50	ø63	ø80	ø100
VQ1101 Port size: ø6 one-touch fitting	800 700 600 500 400 300 200 100 0	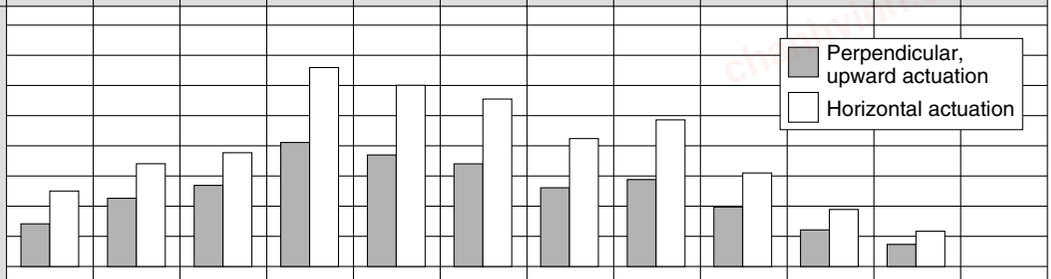											
VQ2101 Port size: ø8 one-touch fitting	800 700 600 500 400 300 200 100 0	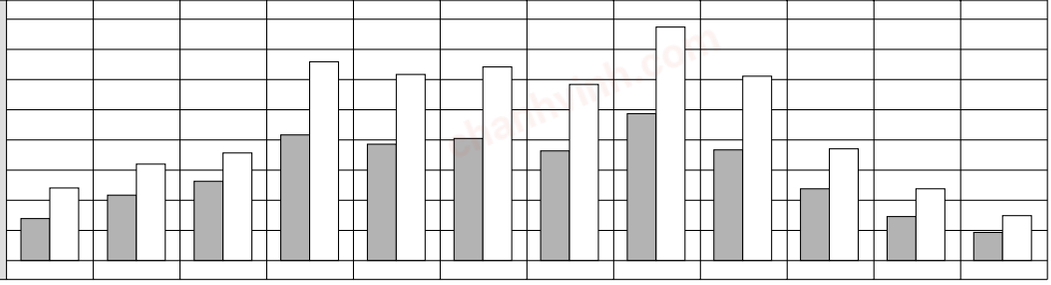											

Note 1) It is when the cylinder is extending that is meter-out controlled by speed controller which is directly connected with cylinder, and its needle valve with being fully open.
Note 2) The average velocity of the cylinder is what the stroke is divided by the total stroke time.
Note 3) Load factor: ((Load mass x 9.8)/Theoretical force) x 100%.

Conditions

Series	Conditions	Series CJ2	Series CM2	Series MB, CA2
VQ1101	Tube bore x Length	T0604 (O.D. ø6/I.D. ø4) x 1 m		
	Speed controller	AS3001F-06		
	Silencer	AN200-KM8		
VQ2101	Tube bore x Length	T0806 (O.D. ø8/I.D. ø6) x 1 m		
	Speed controller	AS3001F-08		
	Silencer	AN200-KM10		

chanhvinh.com

INDEX

Features ..... P. 1
Variations ..... P. 3
Cylinder Speed Chart ..... P. 5
VQ1000 How to Order, Manifold Options ..... P. 7
VQ2000 How to Order, Manifold Options ..... P. 11
VQ1000/2000 Model, Standard/Manifold Specifications ..... P. 15

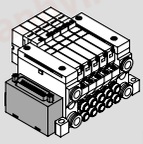

VQ1000/2000
F kit (D-sub connector) ..... P. 17

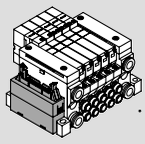

VQ1000/2000
P kit (Flat ribbon cable) ..... P. 21

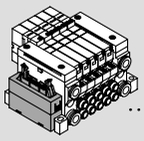

VQ1000/2000
J kit (Flat ribbon cable) ..... P. 25

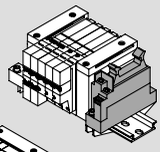

VQ1000/2000
G kit (Flat ribbon cable with terminal block) ..... P. 29

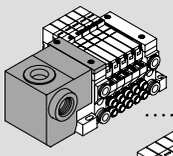

VQ1000/2000
T kit (Terminal block box) ..... P. 33

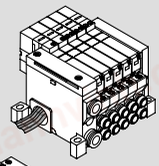

VQ1000/2000
L kit (Lead wire) ..... P. 37

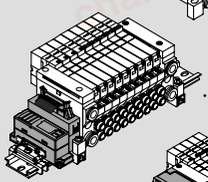

VQ1000/2000
S kit (Serial transmission) EX510 ..... P. 41

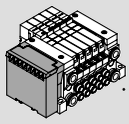

VQ1000/2000
S kit (Serial transmission) EX120/124 ..... P. 45

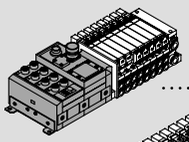

VQ1000/2000
S kit (Serial transmission) EX240 ..... P. 49

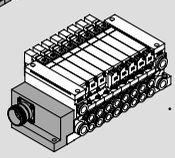

VQ2000
M kit (Circular connector) ..... P. 51

VQ2000 Sub-plate Single Unit ..... P. 54
VQ1000/2000 Semi-standard ..... P. 55
VQ1000/2000 Construction ..... P. 59
VQ1000/2000 Exploded View of Manifold ..... P. 61
VQ1000/2000 Manifold Optional Parts ..... P. 65
Safety Instructions ..... **Back page 1**
VQ1000/2000 Specific Product Precautions ..... **Back page 3**

chanhvinh.com

Plug-in Unit
Base Mounted
Series VQ1000

CE [Option]

How to Order Manifold

VV5Q 1 1 – 08 C6 F U1 – □ – Q

Series

1	VQ1000

Manifold

1	Plug-in unit

Stations

01	1 station
⋮	⋮

The number of max. stations differs from kit to kit. (Refer to the below table.)

Kit type

CE compliant
Note) DC specification only

Option

Symbol	Option
—	None
B Note 2)	With back pressure check valve
D	DIN rail mounting
D0	With DIN rail bracket (Without DIN rail)
D□ Note 6)	DIN rail length specified
G1 Note 3)	1 set of regulator unit
G2 Note 3)	2 sets of regulator unit
G3 Note 3)	3 sets of regulator unit
K Note 4)	Special wiring spec. (Except double wiring)
N	With name plate
R Note 5)	External pilot
S	Direct EXH outlet with built-in silencer

Note 1) When two or more symbols are specified, indicate them alphabetically. Example: -BRS
Note 2) Models with a suffix "-B" have check valves for prevention of back pressure at all manifold stations. When a back pressure check valve is desired, and is to be installed only in certain manifold stations, specify the mounting position by means of the manifold specification sheet.
Note 3) Specify the mounting position by means of the manifold specification sheet.
Note 4) Specify the wiring specifications by means of the manifold specification sheet. (Except L kit)
Note 5) Indicate "R" for the valve with external pilot.
Note 6) □: Station. Example: D08: The number of stations that may be displayed is longer than the manifold number of stations.

Cylinder port

Symbol	Port size
C3	With ø3.2 one-touch fitting
C4	With ø4 one-touch fitting
C6	With ø6 one-touch fitting
M5	M5 thread
CM Note 1)	Mixed sizes and with port plug
L3	Top ported elbow with ø3.2 one-touch fitting
L4	Top ported elbow with ø4 one-touch fitting
L6	Top ported elbow with ø6 one-touch fitting

Symbol	Port size
L5	Top ported elbow M5 thread
B3	Bottom ported elbow with ø3.2 one-touch fitting
B4	Bottom ported elbow with ø4 one-touch fitting
B6	Bottom ported elbow with ø6 one-touch fitting
B5	Bottom ported elbow M5 thread
LM Note 1)	Elbow port, mixed sizes
MM Note 2)	Mixed size for different types of piping, option installed

Note 1) Indicate "Mixed sizes and with port plug" by means of the manifold specification sheet.
Note 2) When selecting the mixed size for different types of piping or dual flow fitting assembly, enter "MM" and give instructions in the manifold specification sheet.
Note 3) Inch-size one-touch fittings are also available. Refer to page 57 for details.
Note 4) M5 fittings for M5 thread are attached without being incorporated.

Simple specials are available with SMC Simple Specials System.
Refer to Best Pneumatics No. ① for details on applicable models.

Kit type/Electrical entry/Cable length

F kit (D-sub connector)

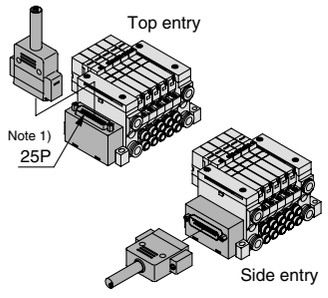

Connector entry direction						
Top entry		Side entry				
F kit	U0	F kit	S0	Without cable	Note 2) 2 to 24 stations	
	U1		S1	With cable (1.5 m)		
	U2		S2	With cable (3 m)		
	U3		S3	With cable (5 m)		

P. 17

P kit (Flat ribbon cable)

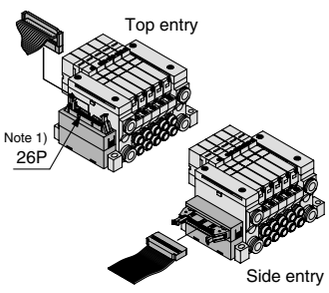

Connector entry direction						
Top entry		Side entry				
P kit	U0	P kit	S0	Without cable	Note 2) 2 to 24 stations	
	U1		S1	With cable (1.5 m)		
	U2		S2	With cable (3 m)		
	U3		S3	With cable (5 m)		

P. 21

J kit (Flat ribbon cable 20P)

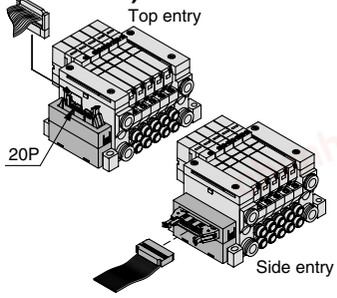

Connector entry direction						
Top entry		Side entry				
J kit	U0	J kit	S0	Without cable	Note 2) 2 to 16 stations	
	U1		S1	With cable (1.5 m)		
	U2		S2	With cable (3 m)		
	U3		S3	With cable (5 m)		

P. 25

G kit (Flat ribbon cable with terminal block)

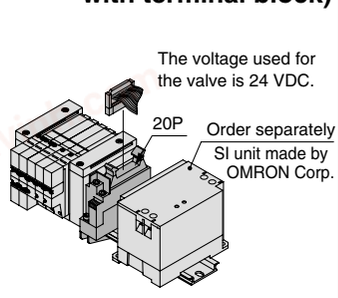

G kit	0	Without cable	Note 2) 2 to 16 stations
	1	With cable (1.5 m)	
	2	With cable (3 m)	
	3	With cable (5 m)	

P. 29

Note 1) Besides the above, F/P kit with different number of pins are available. Refer to page 55 for details.
Note 2) Refer to page 56 for details.

chanhvinh.com

How to Order Valves

VQ 1 1 0 0 □ – 5 □ □ 1 – Q

Series

1	VQ1000

Type of actuation

1	2-position single	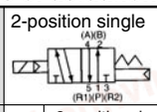
2	Metal: 2-position double	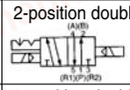
	Rubber: 2-position double	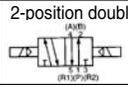
3	3-position closed centre	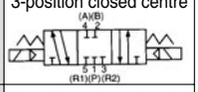
4	3-position exhaust centre	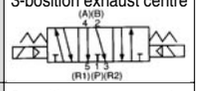
5	3-position pressure centre	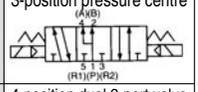
A Note)	4-position dual 3-port valve (A)	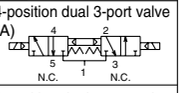
B Note)	4-position dual 3-port valve (B)	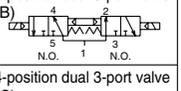
C Note)	4-position dual 3-port valve (C)	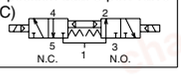

Seal

0	Metal seal
1	Rubber seal

Function

Symbol	Specifications
—	Standard
B	High-speed response type
K Note 1)	High-pressure type (1.0 MPa)
N Note 2)	Negative common
R Note 2)	External pilot

Note 1) Metal seal only.
Note 2) For external pilot and negative common specifications, refer to "Semi-standard" on pages 56 to 57.
Note 3) When two or more symbols are specified, indicate them alphabetically. Combination of [B] and [K] is not possible.

Note 4) Rubber seal only

Manual override

—: Non-locking push type (Tool required) 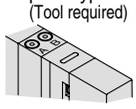	B: Locking type (Tool required) 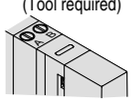
C: Locking type (Manual) 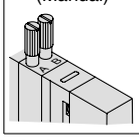	D: Slide locking type (Manual) 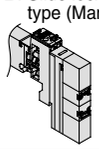

Light/surge voltage suppressor

—	Yes
E Note)	None

Note) Not applicable to the S kit.

Coil voltage

5	24 VDC
6	12 VDC

CE compliant
Note) DC specification only

How to Order Manifold Assembly

Example

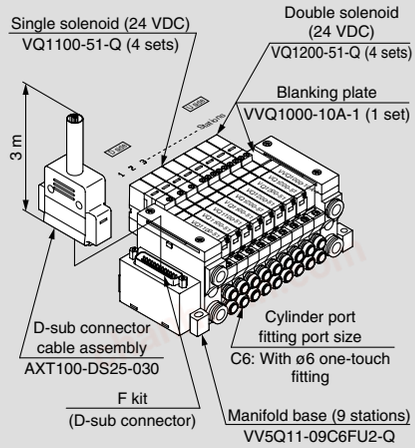

VV5Q11-09C6FU2-Q ·· 1 set (F kit 9-station manifold base part no.)
∗**VQ1100-51** ····· **4 sets (Single solenoid part no.)**
∗**VQ1200-51** ····· **4 sets (Double solenoid part no.)**
∗**VVQ1000-10A-1** ···· **1 set (Blanking plate part no.)**
→ The asterisk denotes the symbol for assembly. Prefix it to the part nos. of the solenoid valve, etc.

Specify the part numbers for valves and options together beneath the manifold base part number. Besides, when the arrangement will be complicated, specify them by means of the manifold specification sheet.

⚠Caution

Use the standard specification when continuously energizing for long periods of time.

T kit (Terminal block box)

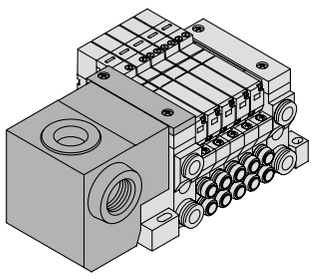

P. 33

T kit	O	Terminal block box	2 to 24 stations Note 2)

L kit (Lead wire)

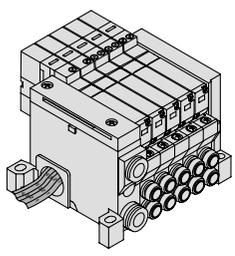

P. 37

L kit	0	With cable (0.6 m)	1 to 8 stations
	1	With cable (1.5 m)	
	2	With cable (3 m)	

S kit (Serial transmission)

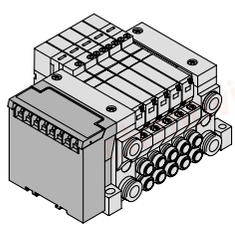

The valve is equipped with an indicator light and surge voltage suppressor, and the voltage is 24 VDC. The dust proof SI unit is also available. Refer to page 45 for details.

P. 45

S kit	0	Without SI unit	Max. 16 stations Note 2)
	Q	DeviceNet™	Max.16 stations
	R1	OMRON Corp.: CompoBus/S (16 outputs)	
	R2	OMRON Corp.: CompoBus/S (8 outputs)	Max. 8 stations
	V	CC-LINK	Max. 16 stations

chanhvinh.com

VQ1000: Manifold Options

P. 65 to 68

Blanking plate assembly
VVQ1000-10A-1

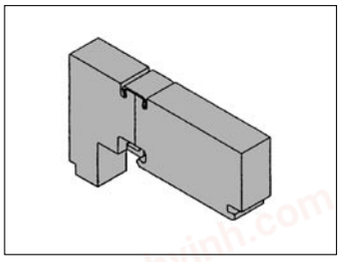

Individual SUP spacer
VVQ1000-P-1-$^{C6}_{N7}$

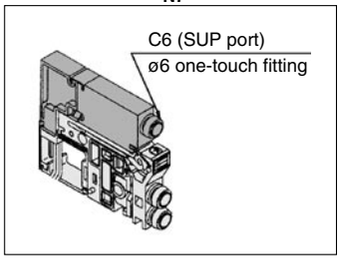

Individual EXH spacer
VVQ1000-R-1-$^{C6}_{N7}$

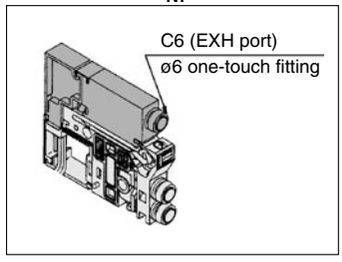

SUP block plate
VVQ1000-16A

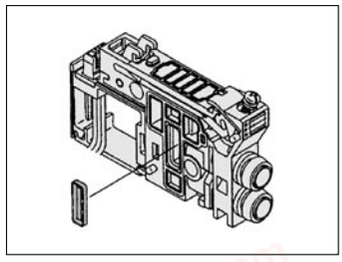

Blanking plate with connector
VVQ1000-1C□-□

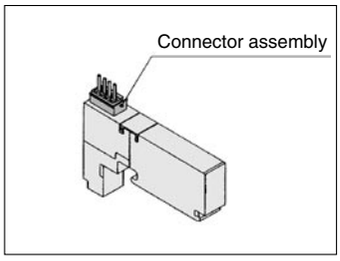

EXH block base assembly
VVQ1000-19A-$^{F□}_{P□}$-$^{C3, C4}_{C6, M5}$ $^{N1, N3}_{N7}$
$^{L□}$

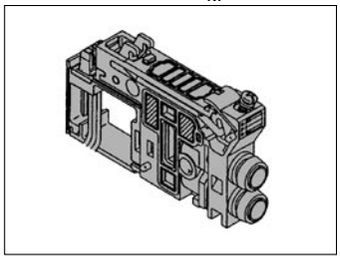

Back pressure check valve assembly [-B]
VVQ1000-18A

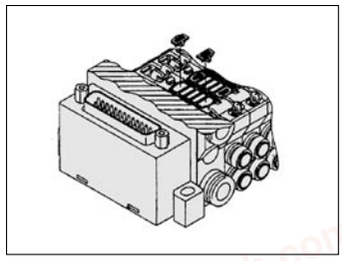

Name plate [-N]
VVQ1000-$^{N}_{NC}$-Station
(1 to Max. stations)

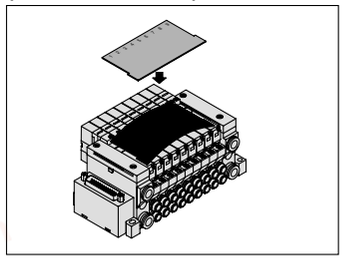

Blanking plug
KQ2P-□

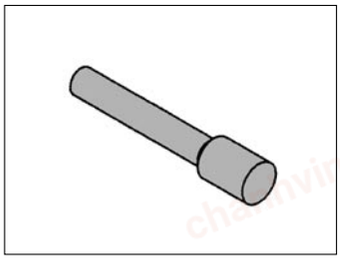

Port plug
VVQ0000-58A

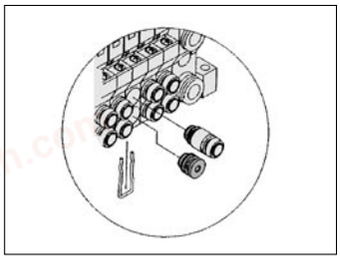

Elbow fitting assembly
VVQ1000-F-L□

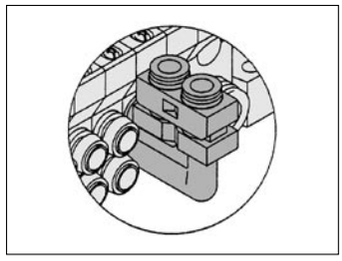

DIN rail mounting bracket [-D/-D0/-D□]
VVQ1000-57A

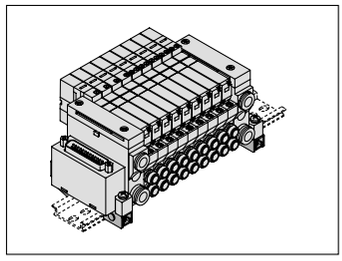

Direct EXH outlet with built-in silencer
[-S]

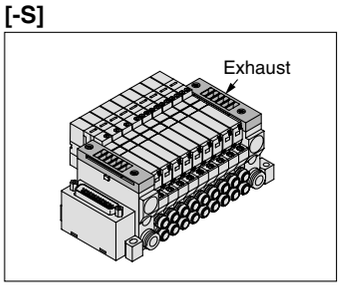

Dual flow fitting assembly
VVQ1000-52A-$^{C8}_{N9}$

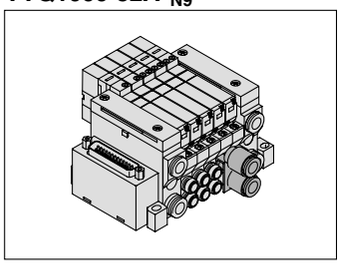

Silencer (For EXH port)
AN200-KM8/AN203-KM8

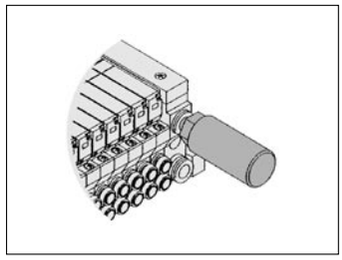



- Refer to back page 4 for cylinder port fittings part number.
- Refer to page 62 for replacement parts.

Regulator unit
VVQ1000-AR-1

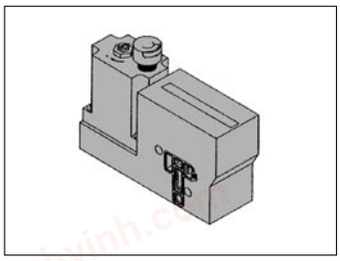

Double check block
VQ1000-FPG-□□-□

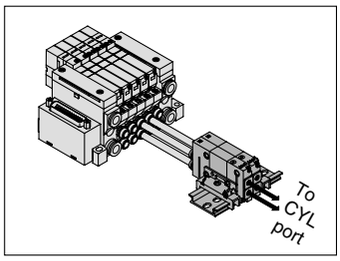

chanhvinh.com

chanhvinh.com
chanhvinh.com
chanhvinh.com
chanhvinh.com
chanhvinh.com
chanhvinh.com

chanhvinh.com

Plug-in Unit
Base Mounted
Series VQ2000

CE

[Option]

How to Order Manifold

VV5Q 2 1 – 08 C6 F U1 – □ – Q

Series

2	VQ2000

Manifold

1	Plug-in unit

Stations

01	1 station
⋮	⋮

The maximum and minimum number of stations are varied depending on kit. (Refer to the below table.)

Cylinder port

Symbol	Port size
C4	With ø4 one-touch fitting
C6	With ø6 one-touch fitting
C8	With ø8 one-touch fitting
CM Note 1)	Mixed sizes and with port plug
L4	Top ported elbow with ø4 one-touch fitting
L6	Top ported elbow with ø6 one-touch fitting

Kit type

Symbol	Port size
L8	Top ported elbow with ø8 one-touch fitting
B4	Bottom ported elbow with ø4 one-touch fitting
B6	Bottom ported elbow with ø6 one-touch fitting
B8	Bottom ported elbow with ø8 one-touch fitting
LM Note 1)	Elbow port, mixed sizes
MM Note 2)	Mixed size for different types of piping, option installed

Note 1) Indicate "Mixed size and with port plug" by means of the manifold specification sheet.
Note 2) When selecting the mixed size for different types of piping, dual flow fitting assembly, or double check block (direct mounting), enter "MM" and give instructions in the manifold specification sheet.
Note 3) Inch-size one-touch fittings are also available. Refer to page 57 for details.

Simple specials are available with SMC Simple Specials System.
Refer to Best Pneumatics No. ① for details on applicable models.

CE compliant

Note) DC specification only

Option

Symbol	Option
—	None
B Note 2)	With back pressure check valve
D	DIN rail mounting
D0	With DIN rail bracket (Without DIN rail)
D□ Note 5)	DIN rail length specified
K Note 3)	Special wiring spec. (Except double wiring)
N	With name plate
R Note 4)	External pilot
S	Direct EXH outlet with built-in silencer
W	Enclosure: Dust-tight, Water-jet-proof (IP65) (T/L/S/M kit only)

Note 1) When two or more symbols are specified, indicate them alphabetically. Example: -DNR
Note 2) Models with a suffix "-B" have check valves for prevention of back pressure at all manifold stations. When a back pressure check valve is desired, and is to be installed only in certain manifold stations, specify the mounting position by means of the manifold specification sheet.
Note 3) Specify the wiring specifications by means of the manifold specification sheet. (Except L kit)
Note 4) Indicate "R" for the valve with external pilot.
Note 5) □: Station. Example: D08: The number of stations that may be displayed is longer than the manifold number of stations.

Kit type/Electrical entry/Cable length

F kit (D-sub connector)

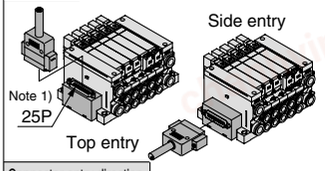

Connector entry direction	
Top entry	Side entry

P. 17

F kit	U0	F kit	S0	Without cable	Note 2) 2 to 24 stations
	U1		S1	With cable (1.5 m)	
	U2		S2	With cable (3 m)	
	U3		S3	With cable (5 m)	

P kit (Flat ribbon cable)

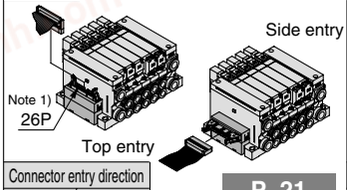

Connector entry direction	
Top entry	Side entry

P. 21

P kit	U0	P kit	S0	Without cable	Note 2) 2 to 24 stations
	U1		S1	With cable (1.5 m)	
	U2		S2	With cable (3 m)	
	U3		S3	With cable (5 m)	

J kit (Flat ribbon cable 20P)

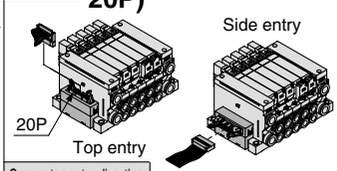

Connector entry direction	
Top entry	Side entry

P. 25

J kit	U0	J kit	S0	Without cable	Note 2) 2 to 16 stations
	U1		S1	With cable (1.5 m)	
	U2		S2	With cable (3 m)	
	U3		S3	With cable (5 m)	

G kit (Flat ribbon cable with terminal block)

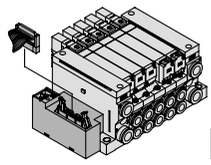

The voltage used for the valve is 24 VDC.

P. 29

G kit	U0	Without cable	Note 2) 2 to 16 stations
	U1	With cable (1.5 m)	
	U2	With cable (3 m)	
	U3	With cable (5 m)	

T kit (Terminal block box)

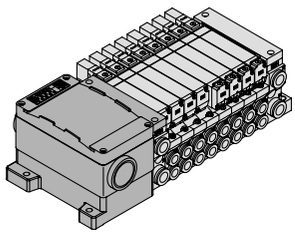

Dust-tight/Water-jet-proof (IP65) compatible

P. 33

T kit	O	Terminal block box	2 to 20 stations Note 2)	

L kit (Lead wire)

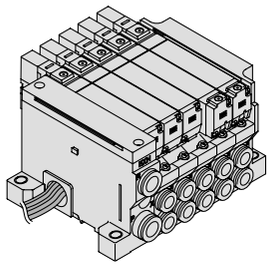

Dust-tight/Water-jet-proof (IP65) compatible

P. 37

L kit	0	With cable (0.6 m)	1 to 8 stations
	1	With cable (1.5 m)	
	2	With cable (3 m)	

S kit (Serial transmission) Note 4)

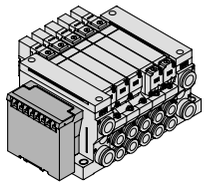

The valve is equipped with an indicator light and surge voltage suppressor, and the voltage is 24 VDC. The dusttight SI unit is available. Refer to page 45 for details. Dust-tight, Water-jet-proof (IP65) is available.

P. 45

S kit	0	Without SI unit	Note 2) Max. 16 stations
	Q	DeviceNet™	Max.16 stations
	R1	OMRON Corp.: CompoBus/S (16 outputs)	
	R2	OMRON Corp.: CompoBus/S (8 outputs)	Max. 8 stations
	V	CC-LINK	Max. 16 stations

M kit (Circular-connector)

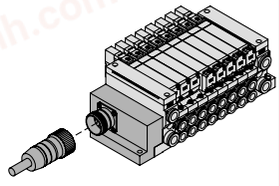

P. 51

M kit	0	Without cable	Note 2) 2 to 24 stations
	1	With cable (1.5 m)	
	2	With cable (3 m)	
	3	With cable (5 m)	

Note 1) Besides the above, F/P kit with different number of pins are available. Refer to page 55 for details.
Note 2) Refer to page 56 for details.
Note 3) Refer to the pages on respective kits for IP65 type. (T/L/S kit)
Note 4) Serial transmission system with IP65 enclosure applicable to input/output is also available. Refer to page 49 for details.

chanhvinh.com

How to Order Valves

VQ 2 1 0 0 ☐ – 5 ☐ ☐ 1 – Q

Series

2	VQ2000

CE compliant

Note) DC specification only

Seal

0	Metal seal
1	Rubber seal

Light/surge voltage suppressor

—	Yes
E Note)	None

Note) Not applicable to the S kit.

Coil voltage

5	24 VDC
6	12 VDC

Type of actuation

1	2-position single		A Note)	4-position dual 3-port valve (A)
2	Metal: 2-position double		B Note)	4-position dual 3-port valve (B)
	Rubber: 2-position double		C Note)	4-position dual 3-port valve (C)
3	3-position closed centre			
4	3-position exhaust centre			
5	3-position pressure centre			

Note) Rubber seal only

Note) For sub-plate single unit type, refer to page 54.

Manual override

—: Non-locking push type (Tool required)

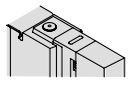

B: Push-locking slotted type (Tool required)

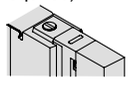

C: Locking type (Manual)

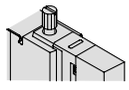

D: Slide locking type (Manual)

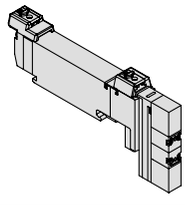

Function

Symbol	Specifications
—	Standard
B	High-speed response type
K Note 1)	High-pressure type (1.0 MPa)
N Note 2)	Negative common
R Note 2)	External pilot

Note 1) Metal seal only

Note 2) For external pilot and negative common specifications, refer to "Semi-standard" on pages 56 to 57.

Note 3) When two or more symbols are specified, indicate them alphabetically. Combination of [B] and [K] is not possible.

How to Order Manifold Assembly

Example

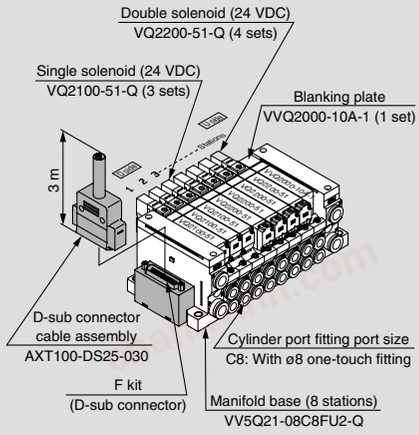

VV5Q21-08C8FU2 **1 set** (F kit 8-station manifold base part no.)
***VQ2100-51** ····· **3 sets (Single solenoid part no.)**
***VQ2200-51** ····· **4 sets (Double solenoid part no.)**
***VVQ2000-10A-1** ···· **1 set (Blanking plate part no.)**

The asterisk denotes the symbol for assembly. Prefix it to the part nos. of the solenoid valve, etc.

Specify the part numbers for valves and options together beneath the manifold base part number. Besides, when the arrangement will be complicated, specify them by means of the manifold specification sheet.

⚠Caution

Use the standard specification when continuously energizing for long periods of time.

chanhvinh.com

VQ2000: Manifold Options

P. 69 to 73

Blanking plate assembly
VVQ2000-10A-1

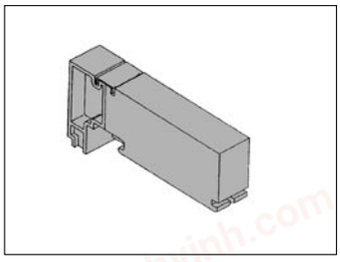

Individual SUP spacer
VVQ2000-P-1-$^{C8}_{N9}$

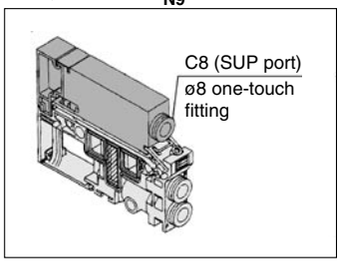

Individual EXH spacer
VVQ2000-R-1-$^{C8}_{N9}$

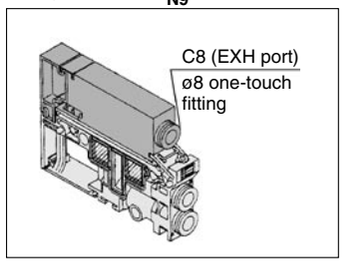

SUP block plate
VVQ2000-16A

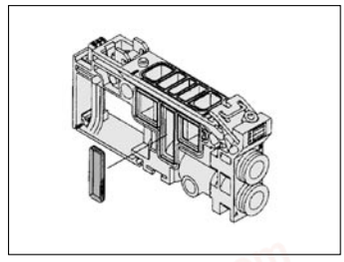

EXH block plate
VVQ2000-19A

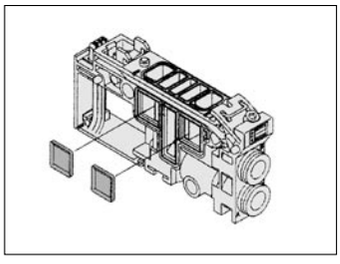

SUP stop valve spacer
VVQ2000-24A-1

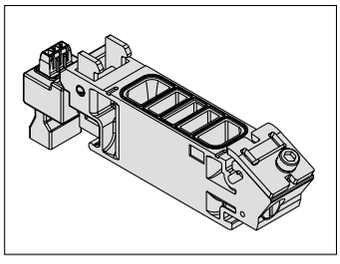

Back pressure check valve assembly [-B]
VVQ2000-18A

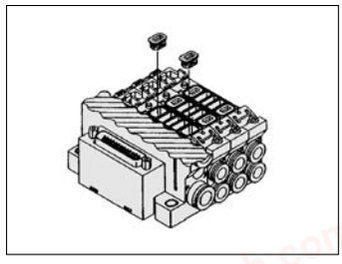

Name plate [-N]
VVQ2000-N-Station
(1 to Max. stations)

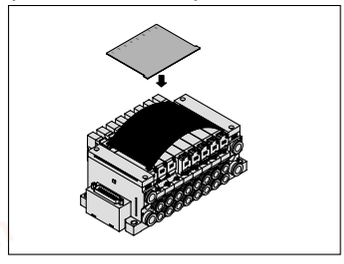

Blanking plug
KQ2P-□

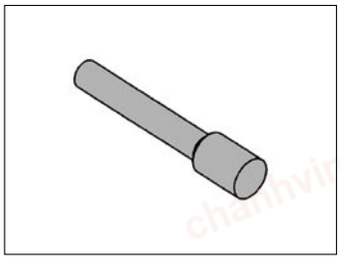

Port plug
VVQ1000-58A

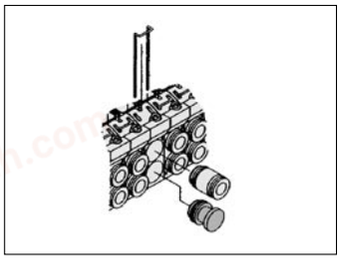

DIN rail mounting bracket [-D/-D0/-D□]
VVQ2000-57A

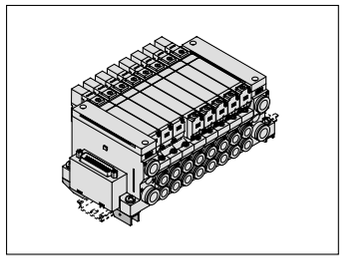

Direct EXH outlet with built-in silencer
[-S]

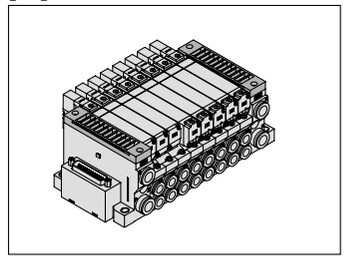

Silencer (For EXH port)
AN200-KM10

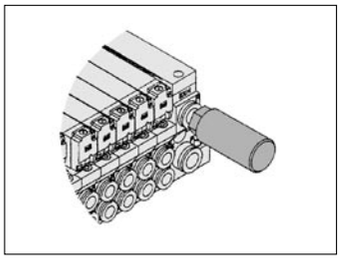

Elbow fitting assembly
VVQ2000-F-L□

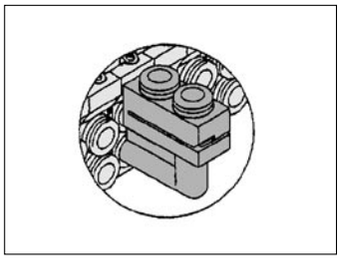

Dual flow fitting assembly
VVQ2000-52A-$^{C10}_{N11}$

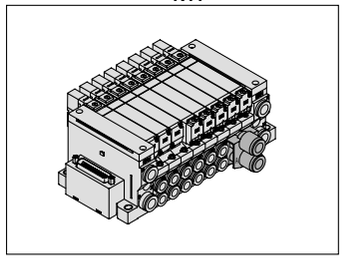

- Refer to back page 4 for cylinder port fittings part number.
- Refer to page 64 for replacement parts.

Double check block (Separated)
VQ2000-FPG-□□-□

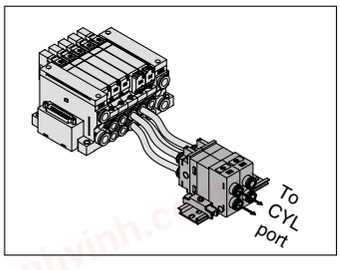

Double check block (Direct mounting)
VVQ2000-23A-□

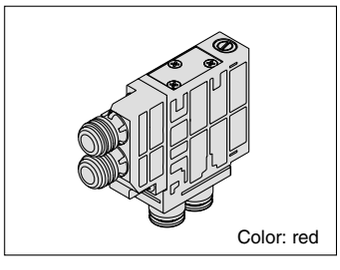

chanhvinh.com

chanhvinh.com
chanhvinh.com
chanhvinh.com
chanhvinh.com
chanhvinh.com
chanhvinh.com

chanhvinh.com

Plug-in Unit
Base Mounted
Series VQ1000/2000

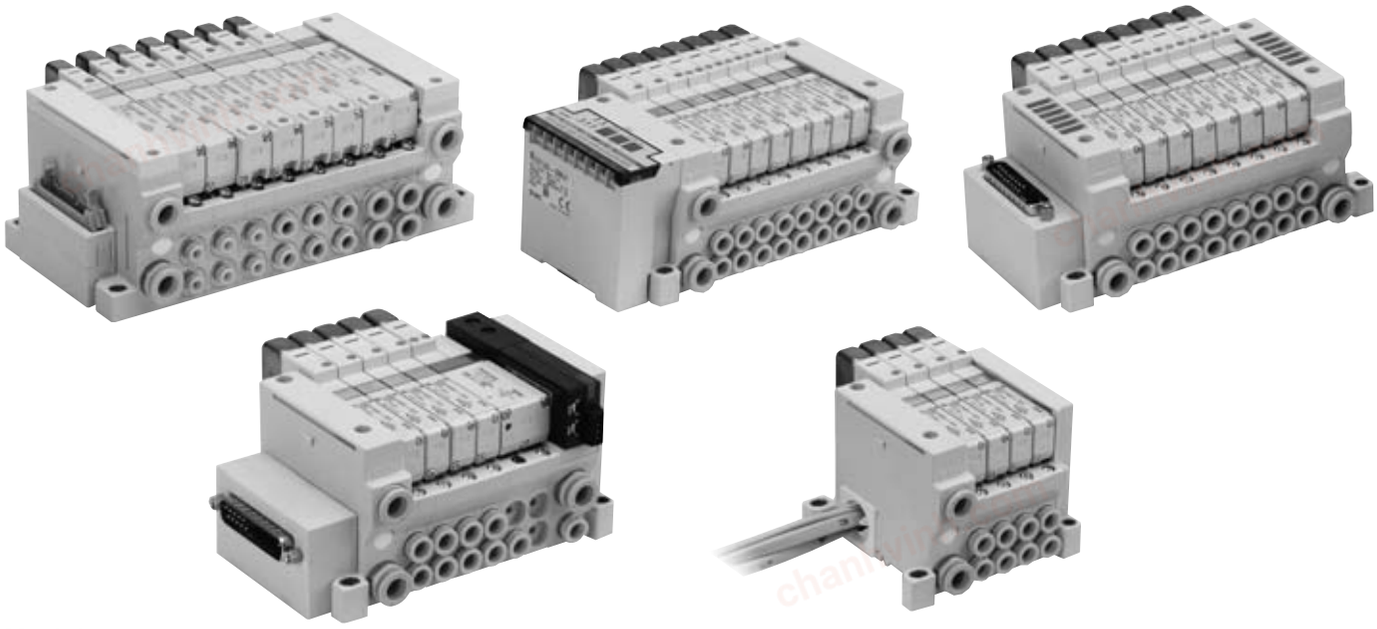

Model

Series	Type of actuation		Model		Flow-rate characteristics Note 1)								Response time (ms) Note 2)		Weight (g)
					1 → 2/4 (P → A/B)				2/4 → 3/5 (A/B → R1/R2)				Standard: 0.4 W	High-speed response: 0.95 W	
					C [dm³/(s·bar)]	b	Cv	Q Note 3) [ℓ/min] (ANR)	C [dm³/(s·bar)]	b	Cv	Q Note 3) [ℓ/min] (ANR)			
VQ1000	2-position	Single	Metal seal	VQ1100	0.70	0.15	0.16	163	0.72	0.25	0.18	178	15 or less	12 or less	67
			Rubber seal	VQ1101	0.85	0.20	0.21	204	1.0	0.30	0.25	254	20 or less	15 or less	
		Double	Metal seal	VQ1200	0.70	0.15	0.16	163	0.72	0.25	0.18	178	13 or less	10 or less	77
			Rubber seal	VQ1201	0.85	0.20	0.21	204	1.0	0.30	0.25	254	20 or less	15 or less	
	3-position	Closed centre	Metal seal	VQ1300	0.68	0.15	0.16	158	0.72	0.25	0.18	178	26 or less	20 or less	
			Rubber seal	VQ1301	0.70	0.20	0.16	168	0.65	0.42	0.18	179	33 or less	25 or less	
		Exhaust centre	Metal seal	VQ1400	0.68	0.15	0.16	158	0.72	0.25	0.18	178	26 or less	20 or less	
			Rubber seal	VQ1401	0.70	0.20	0.16	168	1.0	0.30	0.25	254	33 or less	25 or less	
		Pressure centre	Metal seal	VQ1500	0.70	0.15	0.16	163	0.72	0.25	0.18	178	26 or less	20 or less	
			Rubber seal	VQ1501	0.85	0.20	0.21	204	0.65	0.42	0.18	179	33 or less	25 or less	
	4-position	Dual 3-port valve	Rubber seal	VQ1(A/B/C)01	0.70	0.20	0.16	168	0.70	0.20	0.16	168	33 or less	25 or less	
VQ2000	2-position	Single	Metal seal	VQ2100	2.0	0.15	0.46	466	2.6	0.15	0.60	606	29 or less	22 or less	95
			Rubber seal	VQ2101	2.2	0.28	0.55	552	3.2	0.30	0.80	814	31 or less	24 or less	
		Double	Metal seal	VQ2200	2.0	0.15	0.46	466	2.6	0.15	0.60	606	20 or less	15 or less	105
			Rubber seal	VQ2201	2.2	0.28	0.55	552	3.2	0.30	0.80	814	26 or less	20 or less	
	3-position	Closed centre	Metal seal	VQ2300	2.0	0.15	0.46	466	2.0	0.18	0.46	474	38 or less	29 or less	
			Rubber seal	VQ2301	2.0	0.28	0.49	502	2.2	0.31	0.60	563	44 or less	34 or less	
		Exhaust centre	Metal seal	VQ2400	2.0	0.15	0.46	466	2.6	0.15	0.60	606	38 or less	29 or less	
			Rubber seal	VQ2401	2.0	0.28	0.49	502	3.2	0.30	0.80	814	44 or less	34 or less	
		Pressure centre	Metal seal	VQ2500	2.4	0.17	0.57	565	2.0	0.18	0.46	474	38 or less	29 or less	
			Rubber seal	VQ2501	3.2	0.28	0.80	804	2.2	0.31	0.60	563	44 or less	34 or less	
	4-position	Dual 3-port valve	Rubber seal	VQ2(A/B/C)01	1.8	0.28	0.46	452	1.8	0.28	0.46	452	44 or less	34 or less	

Note 1) The values are given for port size C6: (VQ1000), C8: (VQ2000) without back pressure check valve.
Note 2) As per JIS B 8375-1981 (Supply pressure 0.5 MPa; with indicator light/surge voltage suppressor; clean air
The response time is subject to the pressure and quality of the air.) The values at the time of ON are given for double types.
Note 3) These values have been calculated according to ISO6358 and indicate the flow rate under standard conditions with an inlet pressure of 0.6 MPa (relative pressure) and a pressure drop of 0.1 MPa.

chanhvinh.com

JIS symbol

2-position single

Metal: 2-position double

Rubber: 2-position double

3-position closed centre

3-position exhaust centre

3-position pressure centre

4-position dual 3-port valve Note) (A)

4-position dual 3-port valve Note) (B)

4-position dual 3-port valve Note) (C)

Note) Rubber seal only

Standard Specifications

Valve specifications	Valve type		Metal seal	Rubber seal
	Fluid		Air, Inert gas	Air, Inert gas
	Maximum operating pressure		0.7 MPa (High-pressure type: 1.0 MPa)	0.7 MPa
	Minimum operating pressure	Single	0.1 MPa	0.15 MPa
		Double	0.1 MPa	0.1 MPa
		3-position	0.1 MPa	0.2 MPa
		4-position	———	0.15 MPa
	Ambient and fluid temperature		–10 to 50°C Note 1)	
	Lubrication		Not required	
	Manual override		Push type, Locking type (Tool required, Manual) semi-standard	
	Impact/Vibration resistance Note 2)		150/30 m/s²	
	Enclosure		Dust-protected; Dust-tight, Water-jet-proof (IP65) Note 4)	
Electrical specifications	Coil rated voltage		12 , 24 VDC	
	Allowable voltage fluctuation		±10% of rated voltage	
	Coil insulation type		Equivalent to Class B	
	Power consumption (Current)	24 VDC	0.4 W DC (17 mA), 0.95 W DC (40 mA) Note 3)	
		12 VDC	0.4 W DC (34 mA), 0.95 W DC (80 mA) Note 3)	

Note 1) Use dry air to prevent condensation when operating at low temperatures.
Note 2) Impact resistance ····· No malfunction occurred when it is tested in the axial direction and at the right angles to the main valve and armature in both energized and de-energized states every once for each condition. (Values at the initial period)
Vibration resistance ··· No malfunction occurred in a one-sweep test between 45 and 2000 Hz. Test was performed at both energized and de-energized states in the axial direction and at the right angles to the main valve and armature. (Values at the initial period)
Note 3) Value for high-speed response, high-voltage type (0.95 W)
Note 4) Dust-tight, Water-jet-proof (IP65) is available on T/L/S/M kit of the VQ2000.

Manifold Specifications

Series	Base model	Connection type	Piping specifications: Piping direction	Piping specifications: Port size Note 1) 1(P), 3(R)	Piping specifications: Port size Note 1) 4(A), 2(B)	Applicable stations Note 2)	Applicable solenoid valve	5-station weight (g)
VQ1000	VV5Q11-□□□-Q	F kit–D-sub connector P kit–Flat ribbon cable J kit–Flat ribbon cable (20P) G kit–Flat ribbon cable with terminal block T kit–Terminal block box L kit–Lead wire S kit–Serial transmission	Side	C8 (ø8) Option: Direct EXH outlet with built-in silencer	C3 (ø3.2) C4(ø4) C6 (ø6) M5 (M5 thread)	F/P/T kit (2 to 24 stations) J/G/S kit (2 to 16 stations) L kit (1 to 8 stations)	VQ1□00 VQ1□01	643 (Single) 754 (Double, 3-position)
VQ2000	VV5Q21-□□□-Q	F kit–D-sub connector P kit–Flat ribbon cable J kit–Flat ribbon cable (20P) G kit–Flat ribbon cable with terminal block T kit–Terminal block box L kit–Lead wire S kit–Serial transmission M kit–Circular connector	Side	C10 (ø10) Option: Direct EXH outlet with built-in silencer	C4 (ø4) C6 (ø6) C8 (ø8)	F/P kit (2 to 24 stations) J/G/S kit (2 to 16 stations) L kit (1 to 8 stations) T kit (2 to 20 stations)	VQ2□00 VQ2□01	1076 (Single) 1119 (Double, 3-position)

Note 1) Inch-size one-touch fittings are also available. Refer to page 57 for details.
Note 2) Refer to page 56 for details.

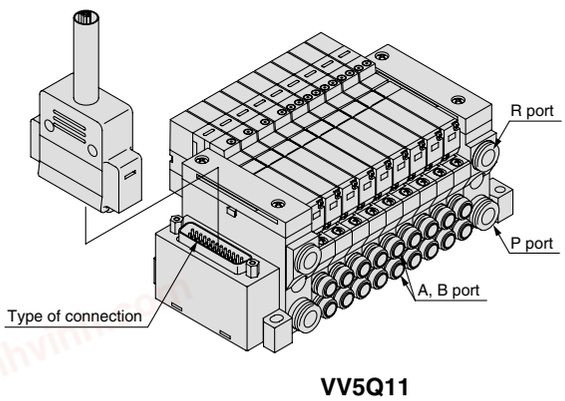

VV5Q11

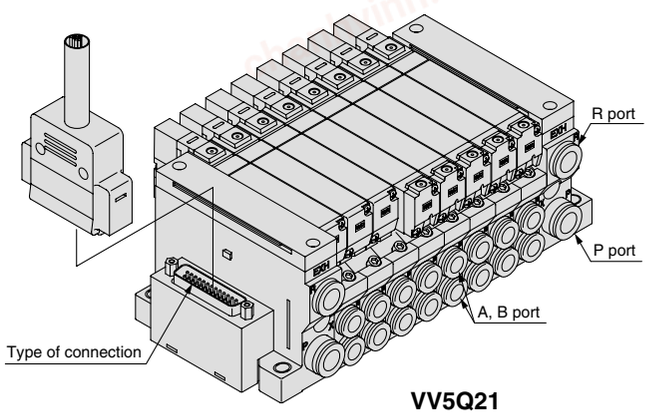

VV5Q21

chanhvinh.com

F Series VQ1000/2000
Kit (D-sub connector)

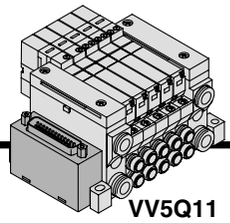
VV5Q11

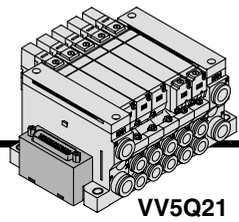
VV5Q21

- **D-sub connector reduces installation labour for electrical connections.**
- **Using the D-sub connector (25P), (15P as semi-standard) conforming to MIL standard permits the use of connectors put on the market and gives a wide interchangeability.**
- **Top or side receptacle position can be selected in accordance with the available mounting space.**
- **Maximum stations are 24.**

Manifold Specifications

Series	Piping specifications			Applicable stations
	Piping direction	Port size		
		1(P), 3(R)	4(A), 2(B)	
VQ1000	Side	C8	C3, C4, C6, M5	Max. 24 stations
VQ2000	Side	C10	C4, C6, C8	Max. 24 stations

D-sub Connector (25 Pins)

Cable Assembly ●

AXT100-DS25- 015 / 030 / 050

(The D-sub connector cable assembly can be ordered individually or included in a specific manifold model no. Refer to "How to Order Manifold.")

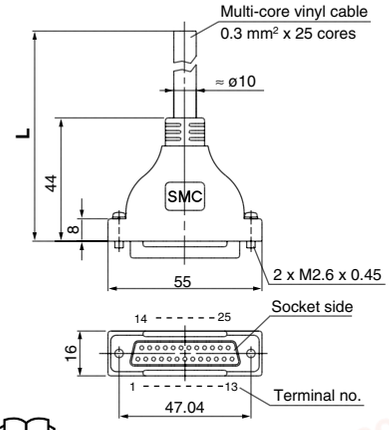

D-sub connector cable assembly

Cable length (L)	Assembly part no.	Note
1.5 m	AXT100-DS25-015	Cable 25 cores x 24AWG
3 m	AXT100-DS25-030	
5 m	AXT100-DS25-050	

Note 1) For other commercial connectors, use a 25 pins type with female connector conforming to MIL-C-24308.
Note 2) Cannot be used for transfer wiring.

Connector manufacturers' example
- Fujitsu Limited
- Japan Aviation Electronics Industry, Ltd.
- J.S.T. Mfg. Co., Ltd.
- Hirose Electric Co., Ltd.

Electrical characteristics

Item	Property
Conductor resistance Ω/km, 20°C	65 or less
Voltage limit V, 1 min, AC	1000
Insulation resistance MΩ/km, 20°C	5 or more

Note) The min. bending radius of the D-sub connector cable assembly is 20 mm.

Wire colour by terminal no. of D-sub connector cable assembly

Terminal no.	Lead wire colour	Dot marking
1	Black	None
2	Brown	None
3	Red	None
4	Orange	None
5	Yellow	None
6	Pink	None
7	Blue	None
8	Purple	White
9	Grey	Black
10	White	Black
11	White	Red
12	Yellow	Red
13	Orange	Red
14	Yellow	Black
15	Pink	Black
16	Blue	White
17	Purple	None
18	Grey	None
19	Orange	Black
20	Red	White
21	Brown	White
22	Pink	Red
23	Grey	Red
24	Black	White
25	White	None

Note 1) Types with 15 pins are also available. Refer to page 55 for details.
Note 2) Lengths other than the above are also available. Please contact SMC for details.

How to Order Manifold

VV5Q 1 1 – 08 C6 F U 1 – [ ] – Q

Series

1	VQ1000
2	VQ2000

Manifold

1	Plug-in unit

Stations

02	2 stations
⋮	⋮
24	24 stations

Note) Refer to page 56 for details.

Connector entry direction

U	Top entry
S	Side entry

Cylinder port

Symbol	Port size	VQ1000	VQ2000
C3	With ø3.2 one-touch fitting	●	—
C4	With ø4 one-touch fitting	●	●
C6	With ø6 one-touch fitting	●	●
C8	With ø8 one-touch fitting	—	●
M5	M5 thread	●	—
CM Note 3)	Mixed sizes and with port plug	●	●
MM Note 4)	Mixed size for different types of piping, option installed	●	●

Note 1) Insert "L" (Top ported) or "B" (Bottom ported) for elbow type.
Example) B6 (Bottom ported elbow with ø6 one-touch fitting)
Note 2) Indicate "LM" for models with elbow fittings and mixed cylinder port sizes.
Note 3) Indicate "Mixed sizes and with port plug" by means of the manifold specification sheet.
Note 4) When selecting the mixed size for different types of piping, dual flow fitting assembly, or double check block (direct mounting), enter "MM" and give instructions in the manifold specification sheet.
Note 5) Inch-size one-touch fittings are available. Refer to "Semi-standard" on page 57 for details.

Cable (Length)

0	Without cable
1	With cable (1.5 m)
2	With cable (3 m)
3	With cable (5 m)

CE compliant
Note) DC specification only

Option

Symbol	Option	VQ1000	VQ2000
—	None	●	●
B Note 2)	With back pressure check valve	●	●
D	DIN rail mounting	●	●
D0	With DIN rail bracket (Without DIN rail)	●	●
D□ Note 3)	DIN rail length specified (□: Stations 02 to 24)	●	●
G1 Note 4)	1 set of regulator unit	●	—
G2 Note 4)	2 sets of regulator unit		
G3 Note 4)	3 sets of regulator unit		
K Note 5)	Special wiring specifications (Except double wiring)	●	●
N	With name plate	●	●
R Note 6)	External pilot	●	●
S	Direct EXH outlet with built-in silencer	●	●

Note 1) When two or more symbols are specified, indicate them alphabetically. Example) -BRS
Note 2) Models with a suffix "-B" have check valves for prevention of back pressure at all manifold stations. When a back pressure check valve is desired, and is to be installed only in certain manifold stations, specify the mounting position by means of the manifold specification sheet.
Note 3) The number of stations that may be displayed is longer than the manifold number of stations.
Note 4) Specify the mounting position by means of the manifold specification sheet.
Note 5) Specify the wiring specifications by means of the manifold specification sheet.
Note 6) Indicate "R" for the valve with external pilot.

chanhvinh.com

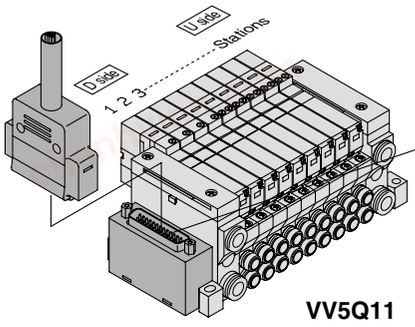

VV5Q11

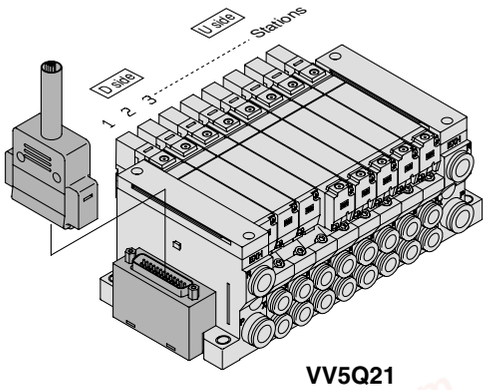

VV5Q21

The total number of stations is tabulated starting from station one on the D-side.

Electrical Wiring Specifications

D-sub connector

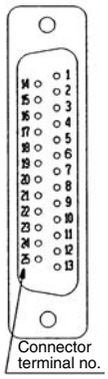

Connector terminal no.

D-sub connector assembly
AXT100-DS25- 015 / 030 / 050 Wire colour

		Terminal no.	Polarity (–)	Polarity (+)	Lead wire colour	Dot marking
Station 1	SOL.A	1	(–)	(+)	Black	None
	SOL.B	14	(–)	(+)	Yellow	Black
Station 2	SOL.A	2	(–)	(+)	Brown	None
	SOL.B	15	(–)	(+)	Pink	Black
Station 3	SOL.A	3	(–)	(+)	Red	None
	SOL.B	16	(–)	(+)	Blue	White
Station 4	SOL.A	4	(–)	(+)	Orange	None
	SOL.B	17	(–)	(+)	Purple	None
Station 5	SOL.A	5	(–)	(+)	Yellow	None
	SOL.B	18	(–)	(+)	Grey	None
Station 6	SOL.A	6	(–)	(+)	Pink	None
	SOL.B	19	(–)	(+)	Orange	Black
Station 7	SOL.A	7	(–)	(+)	Blue	None
	SOL.B	20	(–)	(+)	Red	White
Station 8	SOL.A	8	(–)	(+)	Purple	White
	SOL.B	21	(–)	(+)	Brown	White
Station 9	SOL.A	9	(–)	(+)	Grey	Black
	SOL.B	22	(–)	(+)	Pink	Red
Station 10	SOL.A	10	(–)	(+)	White	Black
	SOL.B	23	(–)	(+)	Grey	Red
Station 11	SOL.A	11	(–)	(+)	White	Red
	SOL.B	24	(–)	(+)	Black	White
Station 12	SOL.A	12	(–)	(+)	Yellow	Red
	SOL.B	25	(–)	(+)	White	None
	COM.	13	(+)	(–) Note)	Orange	Red
			Positive COM spec.	Negative COM spec.		

As the standard electrical wiring specifications, double wiring (connected to SOL. A and SOL. B) is adopted for the internal wiring of each station for 12 stations or less, regardless of valve and option types.
Mixed single and double wiring is available as semi-standard. Refer to page 56 for details.

Note) When using the negative common specifications, use valves for negative common. (Refer to page 56.)
Refer to "Semi-standard" on page 56 for details.

How to Order Valves

VQ 1 1 0 0 ☐ – 5 ☐ ☐ 1 – Q

Series

1	VQ1000
2	VQ2000

Type of actuation

1	2-position single
2	2-position double
3	3-position closed centre
4	3-position exhaust centre
5	3-position pressure centre
A	4-position dual port (N.C. +N.C.)
B	4-position dual port (N.O. +N.O.)
C	4-position dual port (N.C. +N.O.)

Seal

0	Metal seal
1	Rubber seal

Function

Symbol	Specifications
—	Standard
B	High-speed response type
K Note 1)	High-pressure type (1.0 MPa)
N Note 2)	Negative common
R Note 2)	External pilot

Note 1) Metal seal only
Note 2) For external pilot and negative common specifications, refer to "Semi-standard" on pages 56 to 57.
Note 3) When two or more symbols are specified, indicate them alphabetically. Combination of [B] and [K] is not possible.

Manual override

—	Non-locking push type (Tool required)
B	Locking type (Tool required)
C	Locking type (Manual)
D	Slide locking type (Manual)

Light/surge voltage suppressor

—	Yes
E	None

Coil voltage

5	24 VDC
6	12 VDC

CE compliant

Note) DC specification only

How to Order Manifold Assembly

Specify the part numbers for valves and options together beneath the manifold base part number.

<Example>

D-sub connector kit with cable (3 m)

VV5Q11-09C6FU2-Q ··1 set–Manifold base part no.
***VQ1100-51-Q ·····2 sets–Valve part no. (Stations 1 to 2)**
***VQ1200-51-Q ·····4 sets–Valve part no. (Stations 3 to 6)**
***VQ1300-51-Q ·····2 sets–Valve part no. (Stations 7 to 8)**
***VVQ1000-10A-1-Q ···1 set–Blanking plate part no. (Station 9)**

Prefix the asterisk to the part nos. of the solenoid valve, etc.

Write sequentially from the 1st station on the D-side. When part nos. written collectively are complicated, specify them by means of the manifold specification sheet.

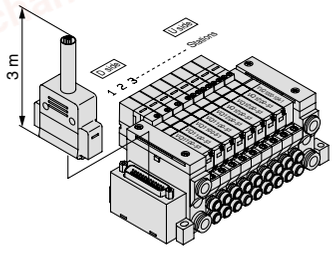

⚠Caution

Use the standard specification when continuously energizing for long periods of time.

chanhvinh.com

VV5Q11

The dashed lines indicate the DIN rail mounting [-D] and the side entry connection [-FS].

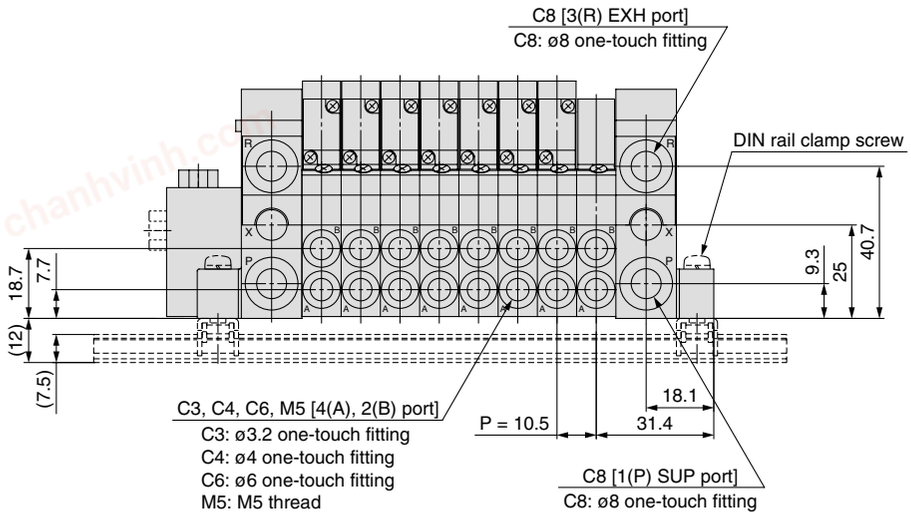

D side Stations -- 1 -- 2 -- 3 -- 4 -- 5 -- 6 -- 7 -- 8 ---- n U side

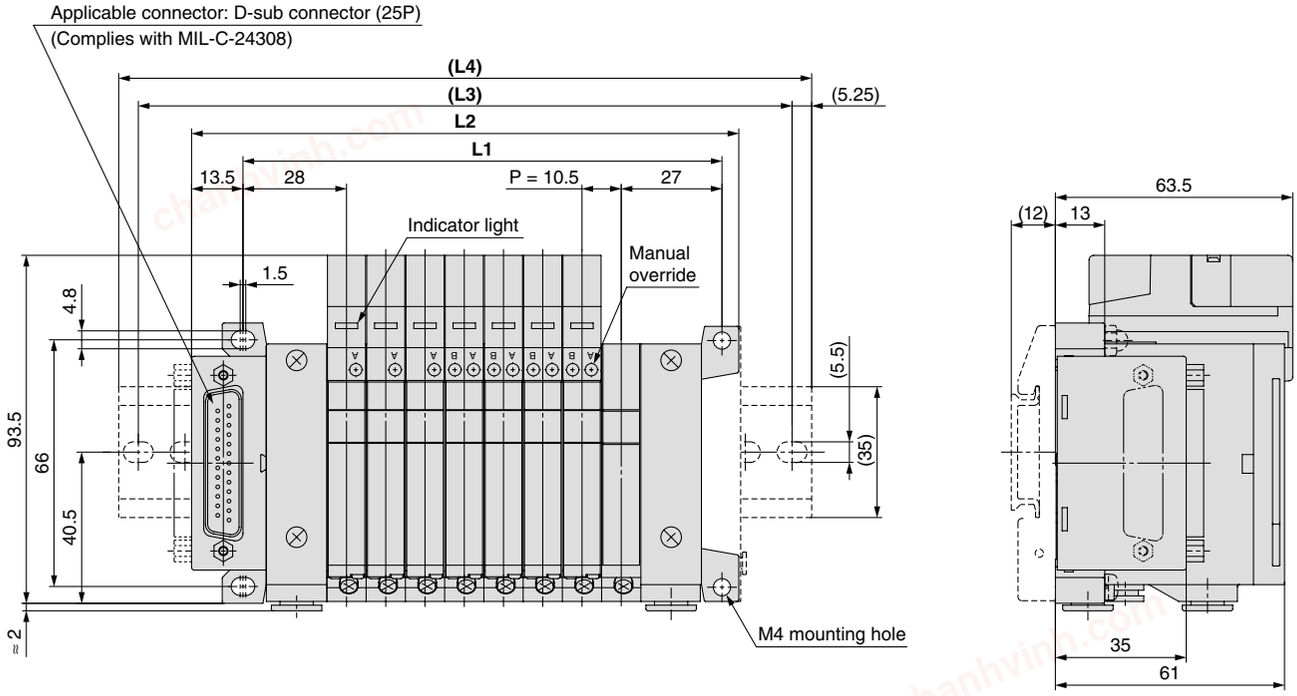

Dimensions

Formula L1 = 10.5n + 44.5, L2 = 10.5n + 62.5 n: Station (Maximum 24 stations)

L \ n	2	3	4	5	6	7	8	9	10	11	12	13	14	15	16	17	18	19	20	21	22	23	24
L1	65.5	76	86.5	97	107.5	118	128.5	139	149.5	160	170.5	181	191.5	202	212.5	223	233.5	244	254.5	265	275.5	286	296.5
L2	83.5	94	104.5	115	125.5	136	146.5	157	167.5	178	188.5	199	209.5	220	230.5	241	251.5	262	272.5	283	293.5	304	314.5
(L3)	112.5	125	125	137.5	150	162.5	175	187.5	187.5	200	212.5	225	237.5	250	250	262.5	275	287.5	300	312.5	325	325	337.5
(L4)	123	135.5	135.5	148	160.5	173	185.5	198	198	210.5	223	235.5	248	260.5	260.5	273	285.5	298	310.5	323	335.5	335.5	348

With ejector unit: Formula L1 = 10.5n + 28.7 + (Number of ejector units x 26.7)
L2 = 10.5n + 46.3 + (Number of ejector units x 26.7)
L4 is L2 plus about 30.

chanhvinh.com

VV5Q21

The dashed lines indicate the DIN rail mounting [-D] and the side entry connection [-FS].

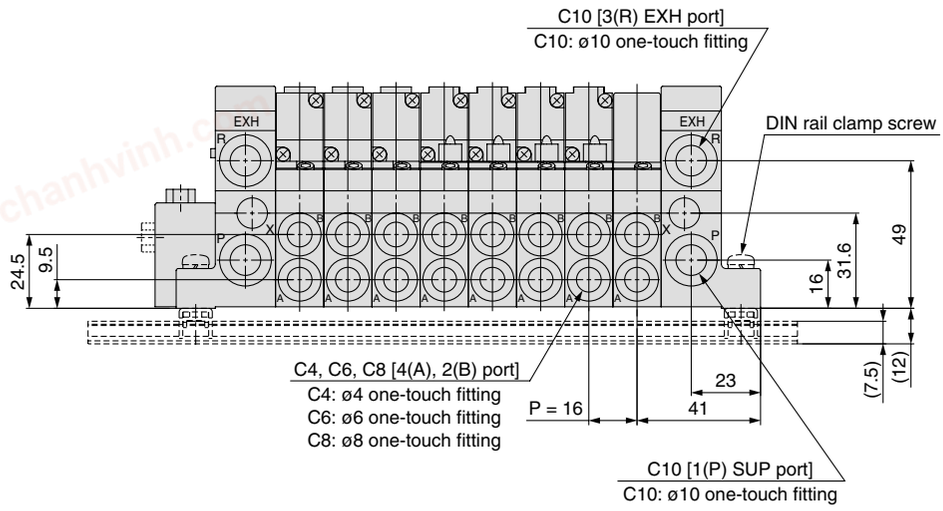

D side Stations -- 1 --- 2 --- 3 --- 4 --- 5 --- 6 --- 7 --- 8 ---- n U side

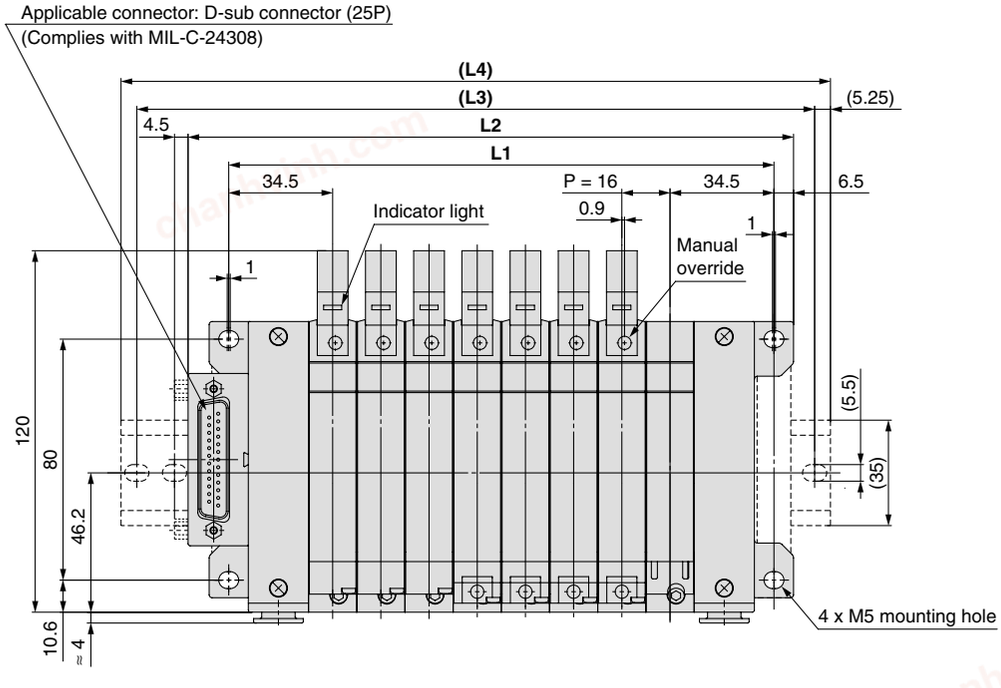

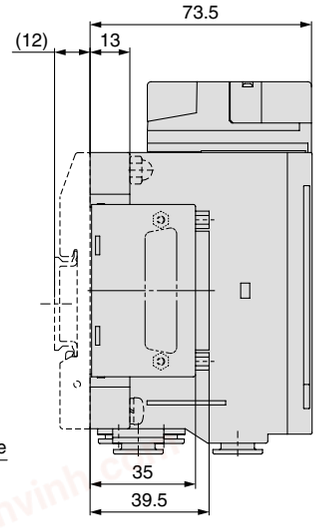

Dimensions

Formula L1 = 16n + 53, L2 = 16n + 73 n: Station (Maximum 24 stations)

L \ n	2	3	4	5	6	7	8	9	10	11	12	13	14	15	16	17	18	19	20	21	22	23	24
L1	85	101	117	133	149	165	181	197	213	229	245	261	277	293	309	325	341	357	373	389	405	421	437
L2	105	121	137	153	169	185	201	217	233	249	265	281	297	313	329	345	361	377	393	409	425	441	457
(L3)	137.5	150	162.5	187.5	200	212.5	225	250	262.5	275	300	312.5	325	337.5	350	375	387.5	400	412.5	437.5	450	462.5	487.5
(L4)	148	160.5	173	198	210.5	223	235.5	260.5	273	285.5	310.5	323	335.5	348	360.5	385.5	398	410.5	423	448	460.5	473	498

chanhvinh.com

P Series VQ1000/2000
kit (Flat ribbon cable)

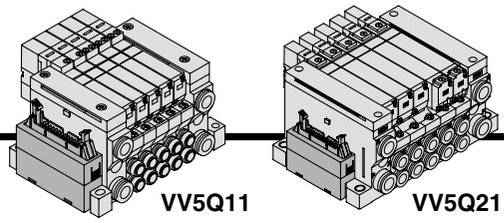

- **MIL flat ribbon cable connector reduces installation labour for electrical connection.**
- **Using the connector for flat ribbon cable (26P) conforming to MIL standard permits the use of connectors put on the market and gives a wide interchangeability.**
- **Top or side receptacle position can be selected in accordance with the available mounting space.**
- **Maximum stations are 24.**

Manifold Specifications

Series	Piping specifications			Applicable stations
	Piping direction	Port size		
		1(P), 3(R)	4(A), 2(B)	
VQ1000	Side	C8	C3, C4, C6, M5	Max. 24 stations
VQ2000	Side	C10	C4, C6, C8	Max. 24 stations

Flat Ribbon Cable (26 Pins)

Cable Assembly

AXT100-FC26- $^{1}_{to}$ $_{3}$

(Flat ribbon cable connector assembly can be ordered individually or included in a specific manifold model no. Refer to "How to Order Manifold.")

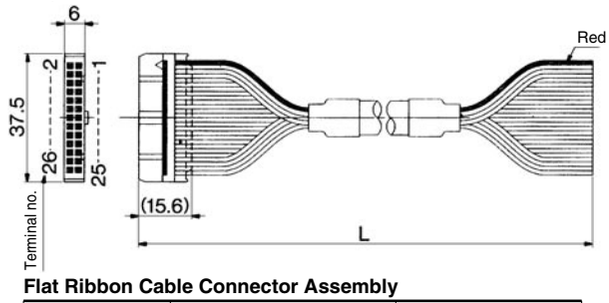

Flat Ribbon Cable Connector Assembly

Cable length (**L**)	Assembly part no.	Note
1.5 m	AXT100-FC26-1	Cable 26 cores x 28AWG
3 m	AXT100-FC26-2	
5 m	AXT100-FC26-3	

Note 1) For other commercial connectors, use a 26 pins type with strain relief conforming to MIL-C-83503.
Note 2) Cannot be used for transfer wiring.

Connector manufacturers' example

- Hirose Electric Co., Ltd.
- Sumitomo 3M Limited
- Fujitsu Limited
- Japan Aviation Electronics Industry, Ltd.
- J.S.T. Mfg. Co., Ltd.
- Oki Electric Cable Co., Ltd.

Note 1) Other than the above model, 10P, 16P, 20P are also available. Refer to page 55 for details.
Note 2) Lengths other than the above are also available. Please contact SMC for details.

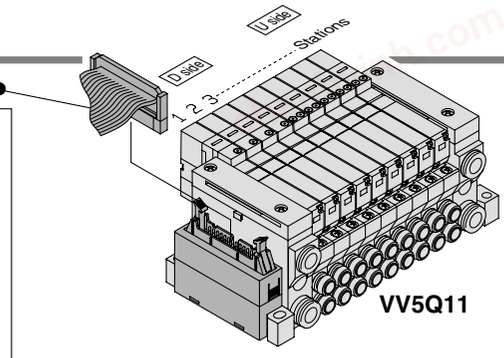

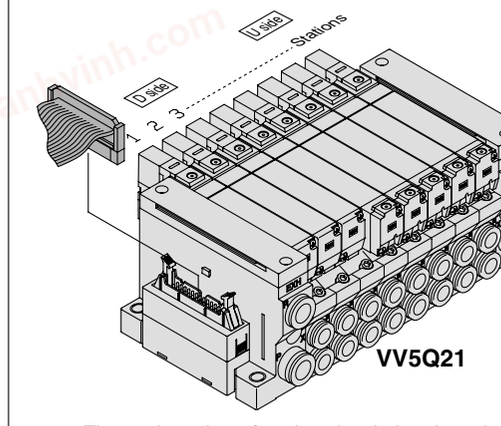

The total number of stations is tabulated starting from one on the D-side.

How to Order Manifold

VV5Q 1 1 – 08 C6 P U 1 – □ – Q

Series

1	VQ1000
2	VQ2000

Manifold

1	Plug-in unit

Stations

02	2 stations
⋮	⋮
24	24 stations

Note) Refer to page 56 for details.

Connector entry direction

U	Top entry
S	Side entry

Cylinder port

Symbol	Port size	VQ1000	VQ2000
C3	With ø3.2 one-touch fitting	●	—
C4	With ø4 one-touch fitting	●	●
C6	With ø6 one-touch fitting	●	●
C8	With ø8 one-touch fitting	—	●
M5	M5 thread	●	—
CM Note 3)	Mixed sizes and with port plug	●	●
MM Note 4)	Mixed size for different types of piping, option installed	●	●

Cable (Length)

0	Without cable
1	With cable (1.5 m)
2	With cable (3 m)
3	With cable (5 m)

CE compliant
Note) DC specification only

Option

Symbol	Option	VQ1000	VQ2000
—	None	●	●
B Note 2)	With back pressure check valve	●	●
D	DIN rail mounting	●	●
D0	With DIN rail bracket (Without DIN rail)	●	●
D□ Note 3)	DIN rail length specified (□: Stations 02 to 24)	●	●
G1 Note 4)	1 set of regulator unit	●	—
G2 Note 4)	2 sets of regulator unit		
G3 Note 4)	3 sets of regulator unit		
K Note 5)	Special wiring specifications (Except double wiring)	●	●
N	With name plate	●	●
R Note 6)	External pilot	●	●
S	Direct EXH outlet with built-in silencer	●	●

Note 1) Insert "L" (Top ported) or "B" (Bottom ported) for elbow type.
Example) B6 (Bottom ported elbow with ø6 one-touch fitting)
Note 2) Indicate "LM" for models with elbow fittings and mixed cylinder port sizes.
Note 3) Indicate "Mixed sizes and with port plug" by means of the manifold specification sheet.
Note 4) When selecting the mixed size for different types of piping, dual flow fitting assembly, or double check block (direct mounting), enter "MM" and give instructions in the manifold specification sheet.
Note 5) Inch-size one-touch fittings are available. Refer to "Semi-standard" on page 57 for details.

Note 1) When two or more symbols are specified, indicate them alphabetically.
Example) -BRS
Note 2) Models with a suffix "-B" have check valves for prevention of back pressure at all manifold stations. When a back pressure check valve is desired, and is to be installed only in certain manifold stations, specify the mounting position by means of the manifold specification sheet.
Note 3) The number of stations that may be displayed is longer than the manifold number of stations.
Note 4) Specify the mounting position by means of the manifold specification sheet.
Note 5) Specify the wiring specifications by means of the manifold specification sheet.
Note 6) Indicate "R" for the valve with external pilot.

chanhvinh.com

● Electrical Wiring Specifications

Flat ribbon cable connector

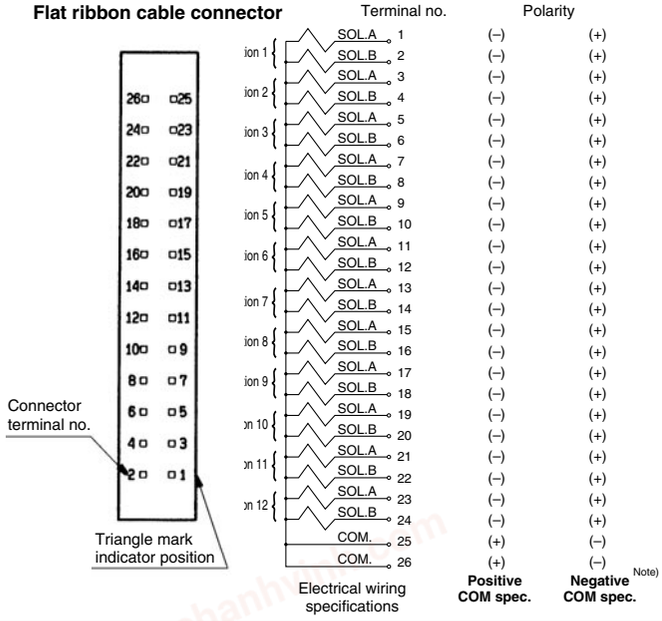

As the standard electrical wiring specifications, double wiring (connected to SOL. A and SOL. B) is adopted for the internal wiring of each station for 12 stations or less, regardless of valve and option types.
Mixed single and double wiring is available as semi-standard. Refer to page 56 for details.

Note) When using the negative common specifications, use valves for negative common. (Refer to page 56,) Refer to "Semi-standard" on page 56 for details.

How to Order Valves

VQ 1 1 0 0 ☐ – 5 ☐ ☐ 1 – Q

Series

1	VQ1000
2	VQ2000

Type of actuation

1	2-position single
2	2-position double
3	3-position closed centre
4	3-position exhaust centre
5	3-position pressure centre
A	4-position dual port (N.C. +N.C.)
B	4-position dual port (N.O. +N.O.)
C	4-position dual port (N.C. +N.C.)

Seal

0	Metal seal
1	Rubber seal

Function

Symbol	Specifications
—	Standard
B	High-speed response type
K Note 1)	High-pressure type (1.0 MPa)
N Note 2)	Negative common
R Note 2)	External pilot

Coil voltage

5	24 VDC
6	12 VDC

Light/surge voltage suppressor

—	Yes
E	None

Manual override

—	Non-locking push type (Tool required)
B	Locking type (Tool required)
C	Locking type (Manual)
D	Slide locking type (Manual)

CE compliant

Note) DC specification only

⚠Caution
Use the standard specification when continuously energizing for long periods of time.

Note 1) Metal seal only
Note 2) Refer to "Semi-standard" on pages 56 to 57 for external pilot and negative common specifications.
Note 3) When two or more symbols are specified, indicate them alphabetically. Combination of [B] and [K] is not possible.

How to Order Manifold Assembly

Specify the part numbers for valves and options together beneath the manifold base part number.

<Example>
Flat ribbon cable kit with cable (3 m)

VV5Q11-09C6PU2-Q···1 set–Manifold base part no.
∗**VQ1100-51-Q**·····**2 sets–Valve part no. (Stations 1 to 2)**
∗**VQ1200-51-Q**·····**4 sets–Valve part no. (Stations 3 to 6)**
∗**VQ1300-51-Q**·····**2 sets–Valve part no. (Stations 7 to 8)**
∗**VVQ1000-10A-1-Q**····**1 set–Blanking plate part no. (Station 9)**

Prefix the asterisk to the part nos. of the solenoid valve, etc.

Write sequentially from the 1st station on the D-side. When part nos. written collectively are complicated, specify them by means of the manifold specification sheet.

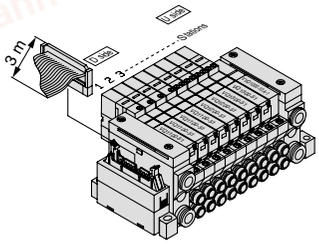

chanhvinh.com

VV5Q11

The dashed lines indicate the DIN rail mounting [-D] and the side entry connection [-PS].

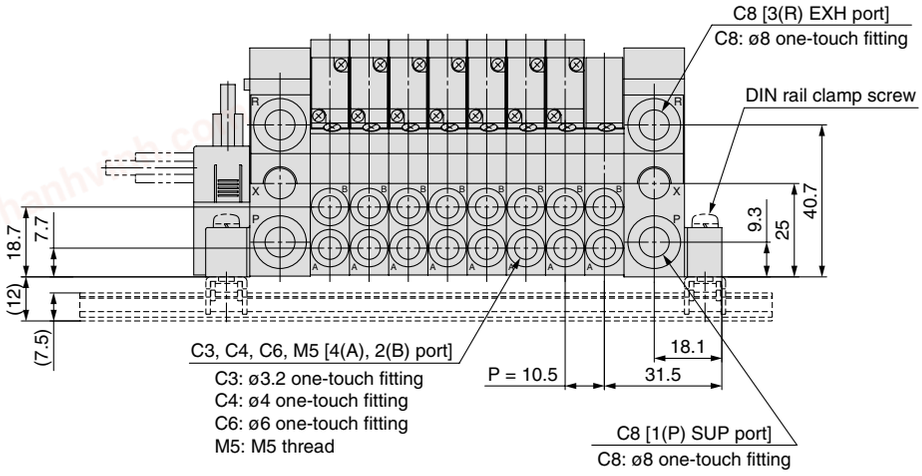

D side Stations 1 2 3 4 5 6 7 8 n U side

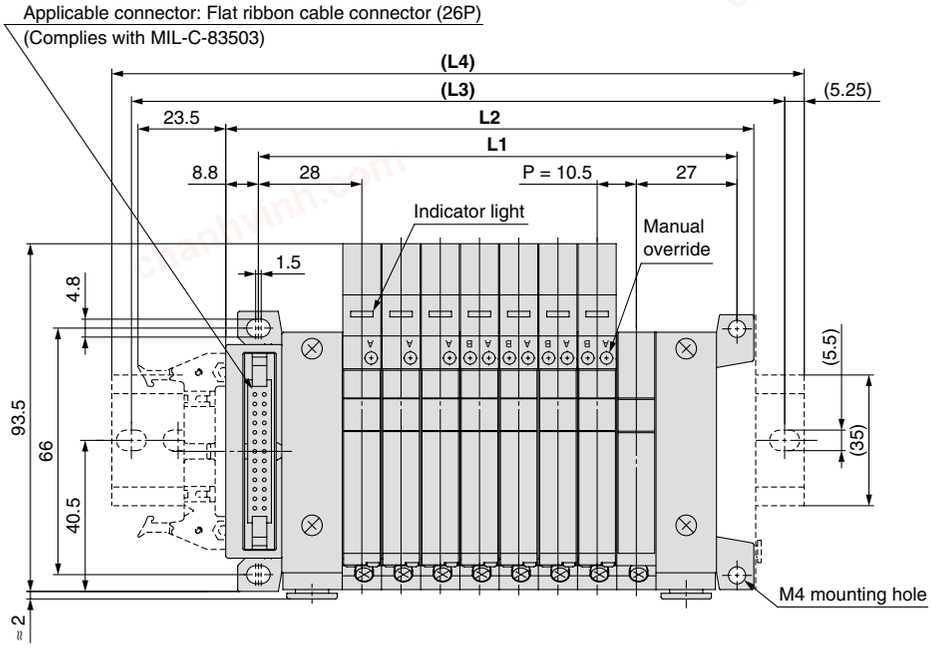

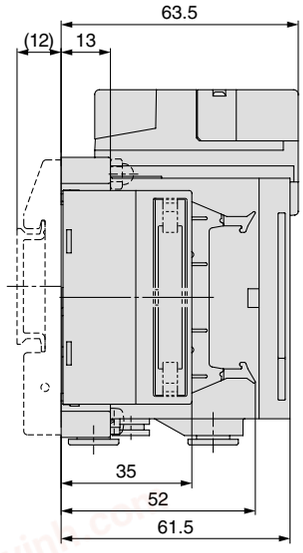

Dimensions

Formula L1 = 10.5n + 44.5, L2 = 10.5n + 57.5 n: Station (Maximum 24 stations)

L \ n	2	3	4	5	6	7	8	9	10	11	12	13	14	15	16	17	18	19	20	21	22	23	24
L1	65.5	76	86.5	97	107.5	118	128.5	139	149.5	160	170.5	181	191.5	202	212.5	223	233.5	244	254.5	265	275.5	286	296.5
L2	78.5	89	99.5	110	120.5	131	141.5	152	162.5	173	183.5	194	204.5	215	225.5	236	246.5	257	267.5	278	288.5	299	309.5
(L3)	112.5	125	125	137.5	150	162.5	175	187.5	187.5	200	212.5	225	225	237.5	250	262.5	275	287.5	287.5	300	312.5	325	337.5
(L4)	123	135.5	135.5	148	160.5	173	185.5	198	198	210.5	223	235.5	235.5	248	260.5	273	285.5	298	298	310.5	323	335.5	348

With ejector unit: Formula L1 = 10.5n + 28.7 + (Number of ejector units x 26.7)
L2 = 10.5n + 41.3 + (Number of ejector units x 26.7)
L4 is L2 plus about 30.

chanhvinh.com

VV5Q21

The dashed lines indicate the DIN rail mounting [-D] and the side entry connection [-PS].

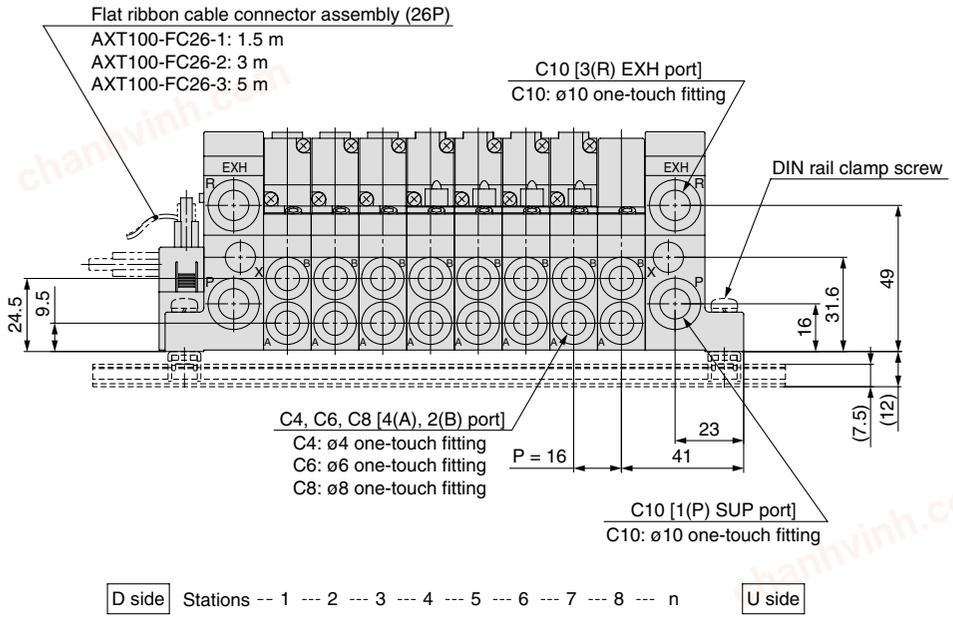

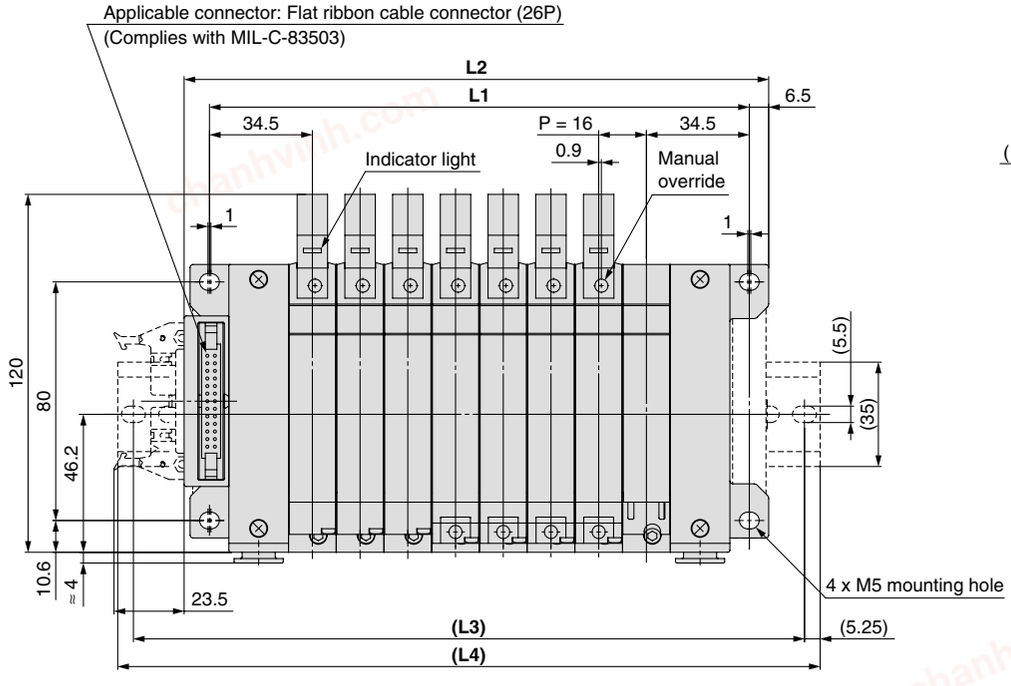

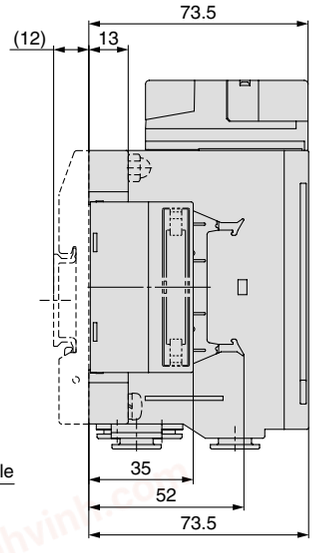

Dimensions

Formula L1 = 16n + 53, L2 = 16n + 68 n: Station (Maximum 24 stations)

L \ n	2	3	4	5	6	7	8	9	10	11	12	13	14	15	16	17	18	19	20	21	22	23	24
L1	85	101	117	133	149	165	181	197	213	229	245	261	277	293	309	325	341	357	373	389	405	421	437
L2	100	116	132	148	164	180	196	212	228	244	260	276	292	308	324	340	356	372	388	404	420	436	452
(L3)	125	150	162.5	175	187.5	212.5	225	237.5	262.5	275	287.5	300	312.5	337.5	350	362.5	387.5	400	412.5	425	450	462.5	475
(L4)	135.5	160.5	173	185.5	198	223	235.5	248	273	285.5	298	310.5	323	348	360.5	373	398	410.5	423	435.5	460.5	473	485.5

chanhvinh.com

J Series VQ1000/2000
kit (Flat ribbon cable)

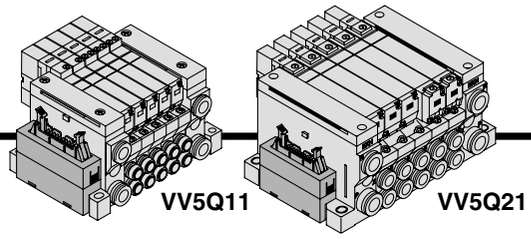

- **MIL flat ribbon cable connector reduces installation labour for electrical connection.**
- **Using the connector for flat ribbon cable connectors (20P) conforming to MIL standard permits the use of connector put on the market and gives a wide interchangeability.**
- **Top or side receptacle position can be selected in accordance with the available mounting space.**
- **Maximum stations are 16.**

Manifold Specifications

Series	Piping specifications			Applicable stations
	Piping direction	Port size		
		1(P), 3(R)	4(A), 2(B)	
VQ1000	Side	C8	C3, C4, C6, M5	Max. 16 stations
VQ2000	Side	C10	C4, C6, C8	Max. 16 stations

Flat Ribbon Cable (20 Pins)

Cable Assembly

AXT100-FC20- $^{1}_{\text{to}}$ $_{3}$

(Flat ribbon cable connector assembly can be ordered individually or included in a specific manifold model no. Refer to "How to Order Manifold.")

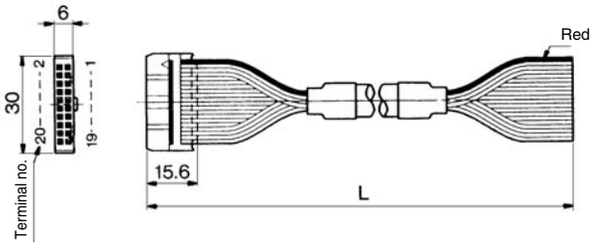

Flat Ribbon Cable Connector Assembly

Cable length (L)	Assembly part no.	Note
1.5 m	AXT100-FC20-1	Cable 20 cores x 28AWG
3 m	AXT100-FC20-2	
5 m	AXT100-FC20-3	

Note 1) For other commercial connectors, use a 20 pins with strain relief conforming to MIL-C-83503.
Note 2) Cannot be used for transfer wiring.

Connector manufacturers' example

- Hirose Electric Co., Ltd.
- Sumitomo 3M Limited
- Fujitsu Limited
- Japan Aviation Electronics Industry, Ltd.
- J.S.T. Mfg. Co., Ltd.
- Oki Electric Cable Co., Ltd.

Note) Lengths other than the above are also available. Please contact SMC for details.

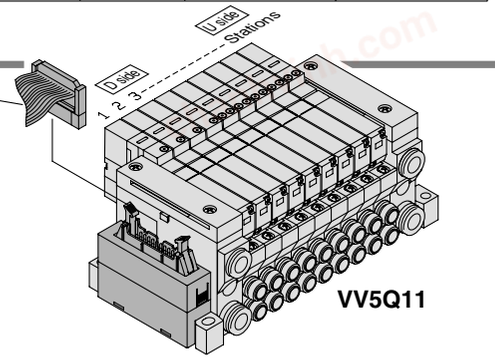

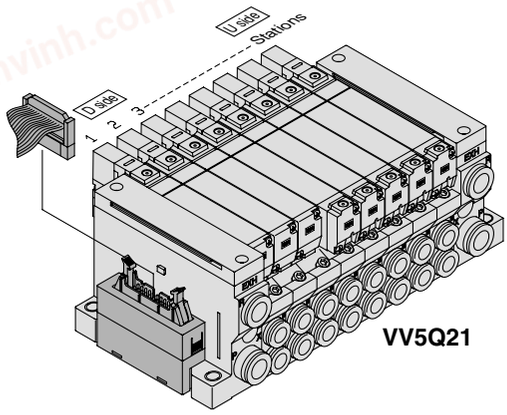

The total number of stations is tabulated starting from one on the D-side.

How to Order Manifold

VV5Q 1 1 – 08 C6 J U 1 – □ – Q

Series

1	VQ1000
2	VQ2000

Manifold

1	Plug-in unit

Stations

02	2 stations
⋮	⋮
16	16 stations

Note) Refer to page 56 for details.

Connector entry direction

U	Top entry
S	Side entry

Cylinder port

Symbol	Port size	VQ1000	VQ2000
C3	With ø3.2 one-touch fitting	●	—
C4	With ø4 one-touch fitting	●	●
C6	With ø6 one-touch fitting	●	●
C8	With ø8 one-touch fitting	—	●
M5	M5 thread	●	—
CM Note 3)	Mixed sizes and with port plug	●	●
MM Note 4)	Mixed size for different types of piping, option installed	●	●

Cable (Length)

0	Without cable
1	With cable (1.5 m)
2	With cable (3 m)
3	With cable (5 m)

CE compliant

Option

Symbol	Option	VQ1000	VQ2000
—	None	●	●
B Note 2)	With back pressure check valve	●	●
D	DIN rail mounting	●	●
D0	With DIN rail bracket (Without DIN rail)	●	●
D□ Note 3)	DIN rail length specified (□: Stations 02 to 24)	●	●
G1 Note 4)	1 set of regulator unit	●	—
G2 Note 4)	2 sets of regulator unit		
G3 Note 4)	3 sets of regulator unit		
K Note 5)	Special wiring specifications (Except double wiring)	●	●
N	With name plate	●	●
R Note 6)	External pilot	●	●
S	Direct EXH outlet with built-in silencer	●	●

Note 1) When two or more symbols are specified, indicate them alphabetically. Example) -BRS
Note 2) Models with a suffix "-B" have check valves for prevention of back pressure at all manifold stations. When a back pressure check valve is desired, and is to be installed only in certain manifold stations, specify the mounting position by means of the manifold specification sheet.
Note 3) The number of stations that may be displayed is longer than the manifold number of stations.
Note 4) Specify the mounting position by means of the manifold specification sheet.
Note 5) Specify the wiring specifications by means of the manifold specification sheet.
Note 6) Indicate "R" for the valve with external pilot.

Note 1) Insert "L" (Top ported) or "B" (Bottom ported) for elbow type.
Example) B6 (Bottom ported elbow with ø6 one-touch fitting)
Note 2) Indicate "LM" for models with elbow fittings and mixed cylinder port sizes.
Note 3) Indicate "Mixed sizes and with port plug" by means of the manifold specification sheet.
Note 4) When selecting the mixed size for different types of piping, dual flow fitting assembly, or double check block (direct mounting), enter "MM" and give instructions in the manifold specification sheet.
Note 5) Inch-size one-touch fittings are available. Refer to "Semi-standard" on page 57 for details.

chanhvinh.com

● Electrical Wiring Specifications

Flat ribbon cable connector

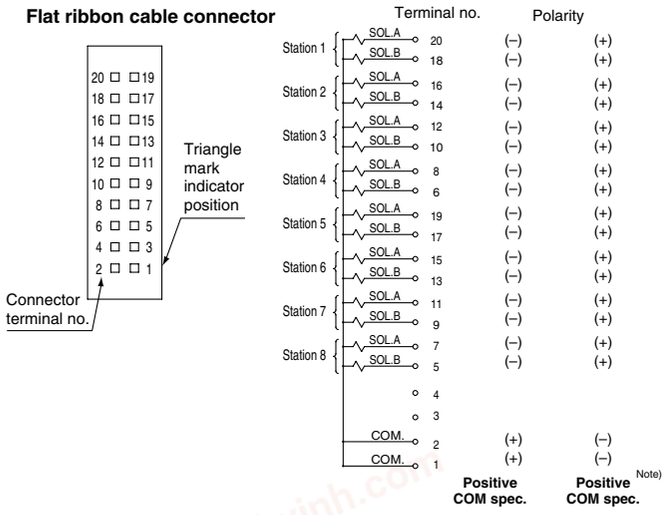

As the standard electrical wiring specifications, double wiring (connected to SOL. A and SOL. B) is adopted for the internal wiring of each station for 8 stations or less, regardless of valve and option types.
Mixed single and double wiring is available as semi-standard. Refer to "Semi-standard" on page 56 for details.

Note) When using the negative common specifications, use valves for negative common. (Refer to page 56,)
Refer to "Semi-standard" on page 56 for details.

How to Order Valves

VQ [1] [1] [0] [0] [ ] – [5] [ ] [ ] 1 – [Q]

Series

1	VQ1000
2	VQ2000

Type of actuation

1	2-position single
2	2-position double
3	3-position closed centre
4	3-position exhaust centre
5	3-position pressure centre
A	4-position dual port (N.C. +N.C.)
B	4-position dual port (N.O. +N.O.)
C	4-position dual port (N.C. +N.O.)

Seal

0	Metal seal
1	Rubber seal

Function

Symbol	Specifications
—	Standard
B	High-speed response type
K Note 1)	High-pressure type (1.0 MPa)
N Note 2)	Negative common
R Note 2)	External pilot

Manual override

—	Non-locking push type (Tool required)
B	Locking type (Tool required)
C	Locking type (Manual)
D	Slide locking type (Manual)

Light/surge voltage suppressor

—	Yes
E	None

Coil voltage

5	24 VDC

CE compliant

Note 1) Metal seal only
Note 2) Refer to "Semi-standard" on pages 56 to 57 for external pilot and negative common specifications.
Note 3) When two or more symbols are specified, indicate them alphabetically. Combination of [B] and [K] is not possible.

How to Order Manifold Assembly

Specify the part numbers for valves and options together beneath the manifold base part number.

<Example>

Flat ribbon cable kit with cable (3 m)

VV5Q11-08C6JU2-Q ··· 1 set–Manifold base part no.
∗**VQ1100-51-Q** ····· **2 sets–Valve part no. (Stations 1 to 2)**
∗**VQ1200-51-Q** ····· **4 sets–Valve part no. (Stations 3 to 6)**
∗**VQ1300-51-Q** ····· **1 set–Valve part no. (Station 7)**
∗**VVQ1000-10A-1-Q** ···· **1 set–Blanking plate part no. (Station 8)**

Prefix the asterisk to the part nos. of the solenoid valve, etc.

Write sequentially from the 1st station on the D-side. When part nos. written collectively are complicated, specify them by means of the manifold specification sheet.

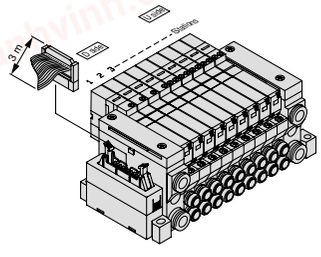

chanhvinh.com

VV5Q11

The dashed lines indicate the DIN rail mounting [-D] and the side entry connection [-JS].

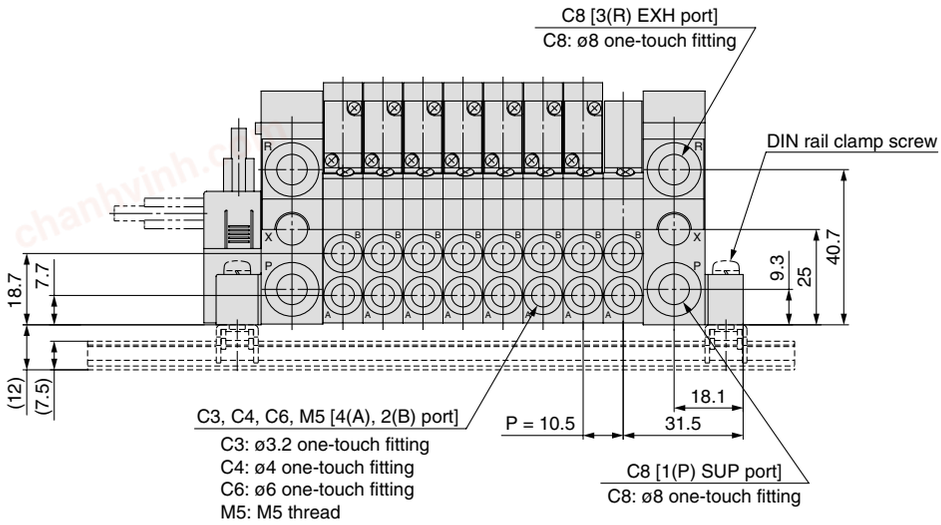

D side Stations 1 2 3 4 5 6 7 8 n U side

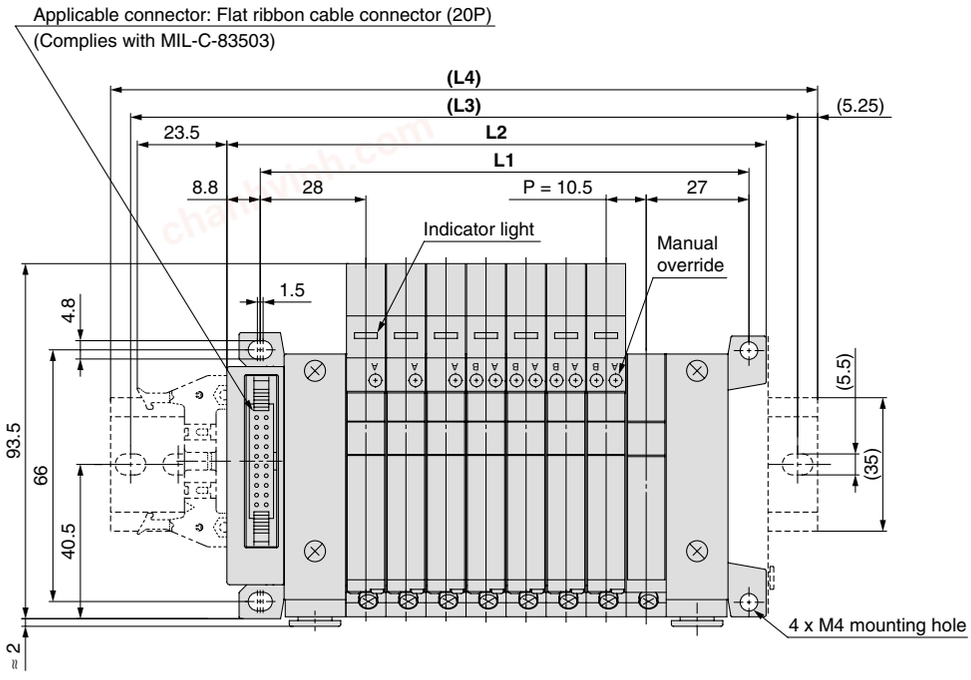

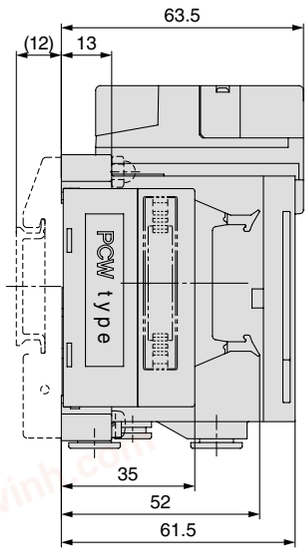

Dimensions

Formula L1 = 10.5n + 44.5, L2 = 10.5n + 57.5 n: Station (Maximum 16 stations)

L \ n	2	3	4	5	6	7	8	9	10	11	12	13	14	15	16
L1	65.5	76	86.5	97	107.5	118	128.5	139	149.5	160	170.5	181	191.5	202	212.5
L2	78.5	89	99.5	110	120.5	131	141.5	152	162.5	173	183.5	194	204.5	215	225.5
(L3)	112.5	125	125	137.5	150	162.5	175	187.5	187.5	200	212.5	225	225	237.5	250
(L4)	123	135.5	135.5	148	160.5	173	185.5	198	198	210.5	223	235.5	235.5	248	260.5

With ejector unit: Formula L1 = 10.5n + 28.7 + (Number of ejector units x 26.7)
L2 = 10.5n + 41.3 + (Number of ejector units x 26.7)
L4 is L2 plus about 30.

chanhvinh.com

VV5Q21

The dashed lines indicate the DIN rail mounting [-D] and the side entry connection [-JS].

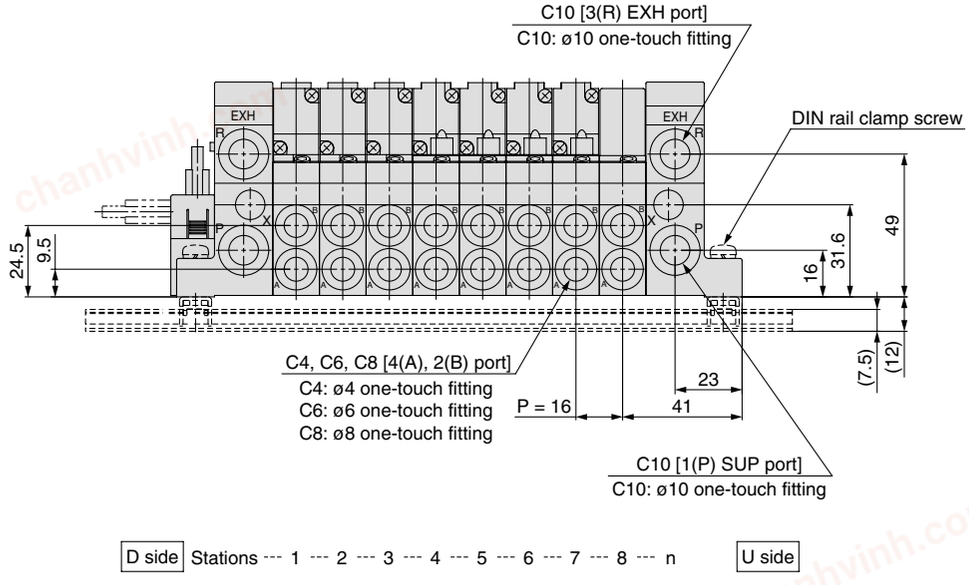

D side Stations --- 1 --- 2 --- 3 --- 4 --- 5 --- 6 --- 7 --- 8 --- n U side

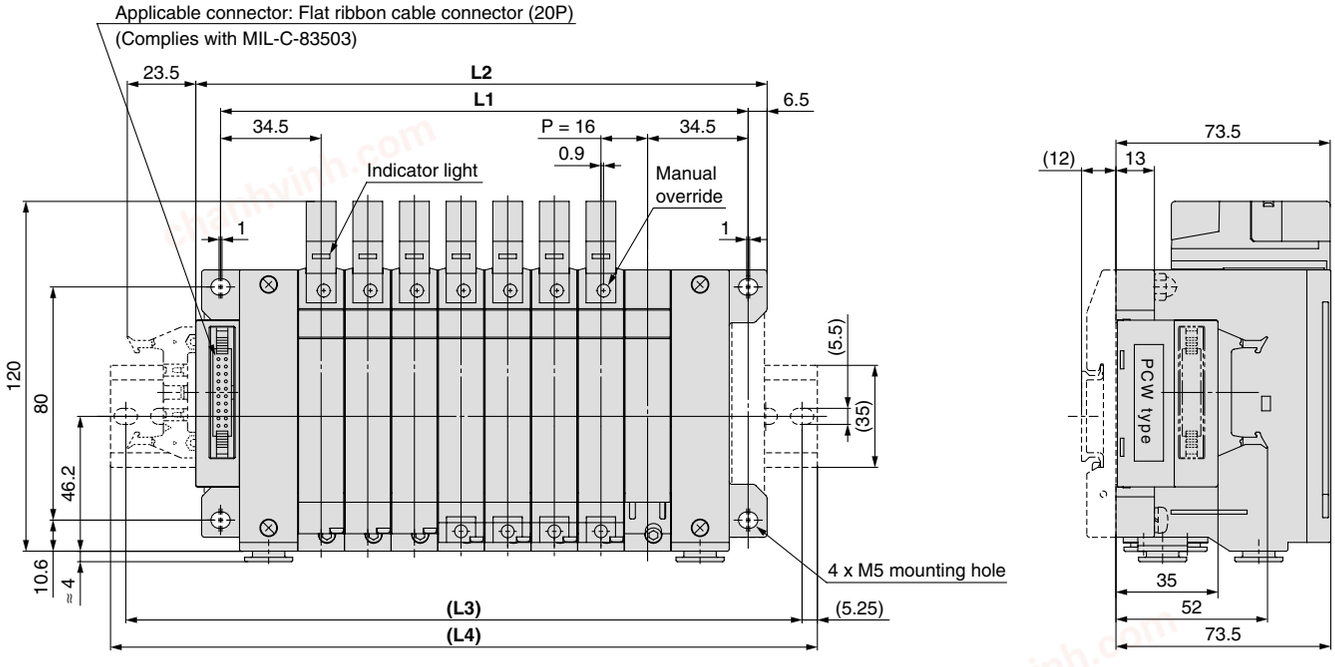

Dimensions

Formula L1 = 16n + 53, L2 = 16n + 68 n: Station (Maximum 16 stations)

L \ n	2	3	4	5	6	7	8	9	10	11	12	13	14	15	16
L1	85	101	117	133	149	165	181	197	213	229	245	261	277	293	309
L2	100	116	132	148	164	180	196	212	228	244	260	276	292	308	324
(L3)	125	150	162.5	175	187.5	212.5	225	237.5	262.5	275	287.5	300	312.5	337.5	350
(L4)	135.5	160.5	173	185.5	198	223	235.5	248	273	285.5	298	310.5	323	348	360.5

chanhvinh.com

G Series VQ1000/2000
kit (Flat ribbon cable with terminal block)

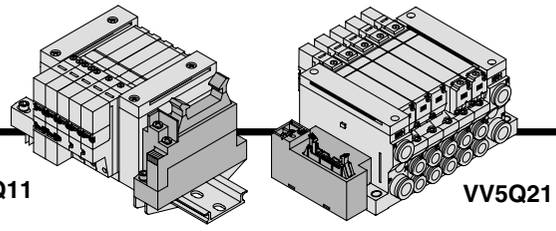

- **Terminal block for power supply equipped with a 20 pins flat ribbon cable connection for rationalized connection of valves.**
- **Solenoid valves and power supply can be connected by the same cable to a specific output unit that requires power supply from the output section to the internal circuit.**
- **Maximum stations are 16.**

Manifold Specifications

Series	Piping specifications			Applicable stations
	Piping direction	Port size		
		1(P), 3(R)	4(A), 2(B)	
VQ1000	Side	C8	C3, C4, C6, M5	Max. 16 stations
VQ2000	Side	C10	C4, C6, C8	Max. 16 stations

Flat Ribbon Cable (20 Pins)

Cable Assembly

AXT100-FC20- $^{1}_{3}$ **to**

(Flat ribbon cable connector assembly can be ordered individually or included in a specific manifold model no. Refer to "How to Order Manifold.")

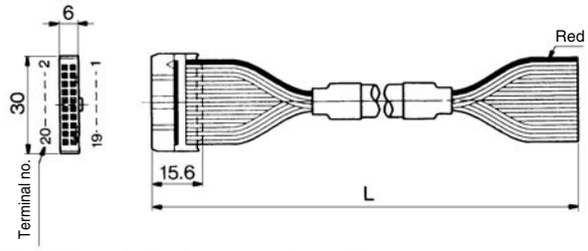

Flat Ribbon Cable Connector Assembly

Cable length (**L**)	Assembly part no.	Note
1.5 m	AXT100-FC20-1	Cable 20 cores x 28AWG
3 m	AXT100-FC20-2	
5 m	AXT100-FC20-3	

∗ For other commercial connectors, use a 20 pins type with strain relief conforming to MIL-C-83503.
∗ Cannot be used for transfer wiring.

Connector manufacturers' example

- Hirose Electric Co., Ltd.
- Sumitomo 3M Limited
- Japan Aviation Electronics Industry, Ltd.
- J.S.T. Mfg. Co., Ltd.
- Oki Electric Cable Co., Ltd.
- Fujitsu Limited

Note) Lengths other than the above are also available. Please contact SMC for details.

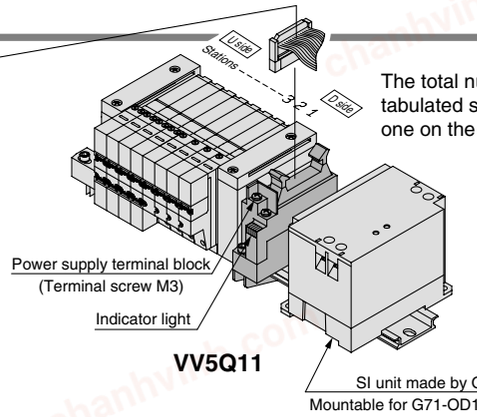

The total number of stations is tabulated starting from station one on the D-side.

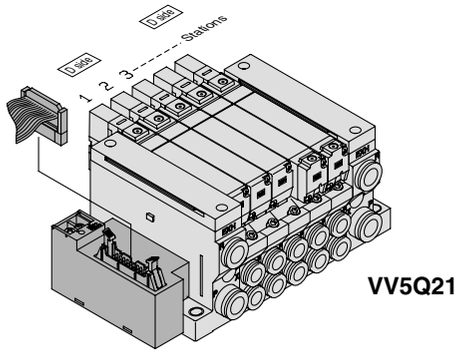

How to Order Manifold

VV5Q 1 1 – 08 C6 G □ □ – □ – Q

Series

1	VQ1000
2	VQ2000

Manifold

1	Plug-in unit

Stations

02	2 stations
⋮	⋮
16 Note)	16 stations

Note) Refer to page 56 for details.

Cylinder port

Symbol	Port size	VQ1000	VQ2000
C3	With ø3.2 one-touch fitting	●	—
C4	With ø4 one-touch fitting	●	●
C6	With ø6 one-touch fitting	●	●
C8	With ø8 one-touch fitting	—	●
M5	M5 thread	●	—
CM Note 3)	Mixed sizes and with port plug	●	●
MM Note 4)	Mixed size for different types of piping, option installed	●	●

Connector entry direction, Top entry

—	VQ1000
U	VQ2000

Cable (Length)

0	Without cable
1	Cable length 1.5 m
2	Cable length 3 m
3	Cable length 5 m

CE compliant

Option

Symbol	Option	VQ1000	VQ2000
—	None	●	●
B Note 2)	With back pressure check valve	●	●
D	DIN rail mounting	●	●
D0	With DIN rail bracket (Without DIN rail)	●	●
D□ Note 3)	DIN rail length specified (□: Stations 02 to 24)	●	●
G1 Note 4)	1 set of regulator unit	●	—
G2 Note 4)	2 sets of regulator unit		
G3 Note 4)	3 sets of regulator unit		
K Note 5)	Special wiring specifications (Except double wiring)	●	●
N	With name plate	●	●
R Note 6)	External pilot	●	●
S	Direct EXH outlet with built-in silencer	●	●

Note 1) Insert "L" (Top ported) or "B" (Bottom ported) for elbow type.
Example) B6 (Bottom ported elbow with ø6 one-touch fitting)
Note 2) Indicate "LM" for models with elbow fittings and mixed cylinder port sizes.
Note 3) Indicate "Mixed sizes and with port plug" by means of the manifold specification sheet.
Note 4) When selecting the mixed size for different types of piping, dual flow fitting assembly, or double check block (direct mounting), enter "MM" and give instructions in the manifold specification sheet.
Note 5) Inch-size one-touch fittings are available. Refer to "Semi-standard" on page 57 for details.

Note 1) When two or more symbols are specified, indicate them alphabetically.
Example) -BRS
Note 2) Models with a suffix "-B" have check valves for prevention of back pressure at all manifold stations. When a back pressure check valve is desired, and is to be installed only in certain manifold stations, specify the mounting position by means of the manifold specification sheet.
Note 3) The number of stations that may be displayed is longer than the manifold number of stations.
Note 4) Specify the mounting position by means of the manifold specification sheet.
Note 5) Specify the wiring specifications by means of the manifold specification sheet.
Note 6) Indicate "R" for the valve with external pilot.

chanhvinh.com

● Connector Assembly

Electric circuit diagram (Below wiring is the case of all double solenoid connections.)

Flat ribbon cable connector

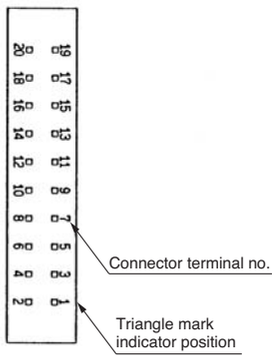

Terminal no.

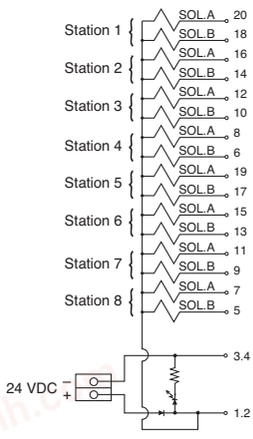

As the standard electrical wiring specifications, double wiring (connected to SOL. A and SOL. B) is adopted for the internal wiring of each station for 8 stations or less, regardless of valve and option types. Mixed single and double wiring is available as semi-standard. Refer to page 56 for details.

How to Order Valves

VQ [1] [1] [0] [0] [ ] – [5] [ ] [ ] 1 – [Q]

CE compliant

Series

1	VQ1000
2	VQ2000

Seal

0	Metal seal
1	Rubber seal

Type of actuation

1	2-position single
2	2-position double
3	3-position closed centre
4	3-position exhaust centre
5	3-position pressure centre
A	4-position dual port (N.C. +N.C.)
B	4-position dual port (N.O. +N.O.)
C	4-position dual port (N.C. +N.O.)

Coil voltage

5	24 VDC

Manual override

—	Non-locking push type (Tool required)
B	Locking type (Tool required)
C	Locking type (Manual)
D	Slide locking type (Manual)

Light/surge voltage suppressor

Nil	Yes
E	None

Function

Symbol	Specifications
—	Standard
B	High-speed response type
K Note 1)	High- pressure type (1.0 MPa)
R Note 2)	External pilot

Note 1) Metal seal only
Note 2) Refer to “Semi-standard” on page 57 for external pilot specifications.
Note 3) When two or more symbols are specified, indicate them alphabetically. Combination of [B] and [K] is not possible.

How to Order Manifold Assembly

Specify the part numbers for valves and options together beneath the manifold base part number.

<Example>

Flat ribbon cable kit with terminal block with cable (3 m)

VV5Q11-08C6G2-Q ··· 1 set–Manifold base part no.
***VQ1100-51-Q ····· 4 sets–Valve part no. (Stations 1 to 4)**
***VQ1200-51-Q ····· 1 set–Valve part no. (Station 5)**
***VQ1300-51-Q ····· 3 sets–Valve part no. (Stations 6 to 8)**

Prefix the asterisk to the part nos. of the solenoid valve, etc.

Write sequentially from the 1st station on the D-side. When part nos. written collectively are complicated, specify them by means of the manifold specification sheet.

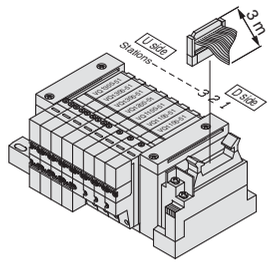

chanhvinh.com

VV5Q11

The dashed lines and dimensions in parentheses indicate DIN rail mounting [-D].

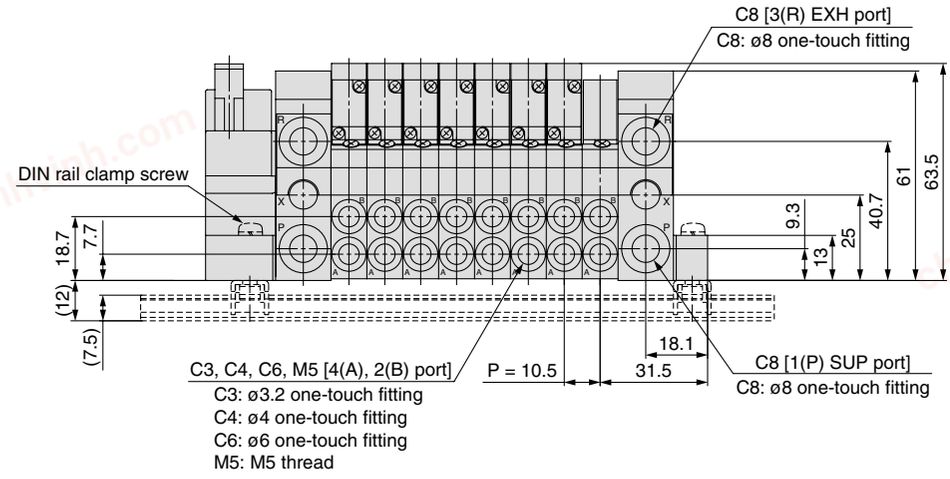

D side Stations -- 1 -- 2 -- 3 -- 4 -- 5 -- 6 -- 7 -- 8 ---- n U side

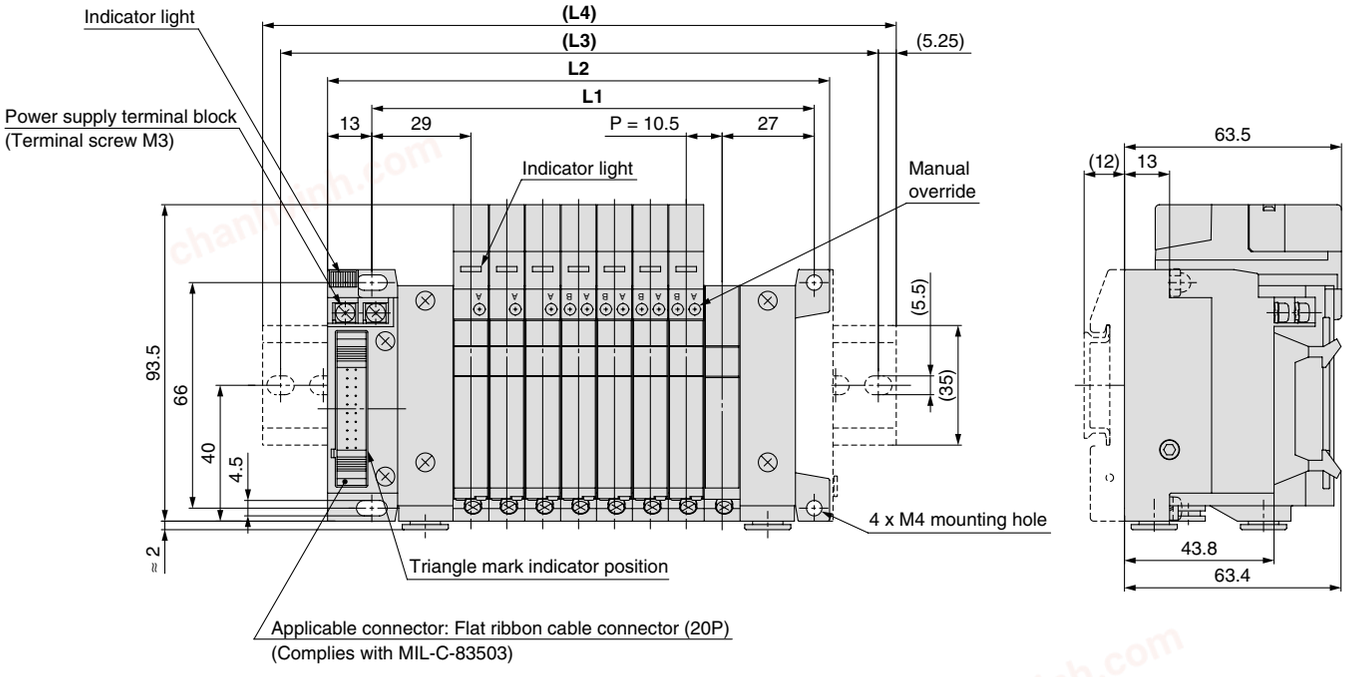

Dimensions

Formula L1 = 10.5n + 45.5, L2 = 10.5n + 63 n: Station (Maximum 16 stations)

L \ n	2	3	4	5	6	7	8	9	10	11	12	13	14	15	16
L1	66.5	77	87.5	98	108.5	119	129.5	140	150.5	161	171.5	182	192.5	203	213.5
L2	84	94.5	105	115.5	126	136.5	147	157.5	168	178.5	189	199.5	210	220.5	231
(L3)	112.5	125	125	137.5	150	162.5	175	187.5	187.5	200	212.5	225	237.5	250	262.5
(L4)	123	135.5	135.5	148	160.5	173	185.5	198	198	210.5	223	235.5	248	260.5	273

With ejector unit: Formula L1 = 10.5n + 29.7 + (Number of ejector units x 26.7)
L2 = 10.5n + 46.8 + (Number of ejector units x 26.7)
L4 is L2 plus about 30.

chanhvinh.com

VV5Q21

The dashed lines indicate DIN rail mounting [-D] (with DIN rail mounting bracket).

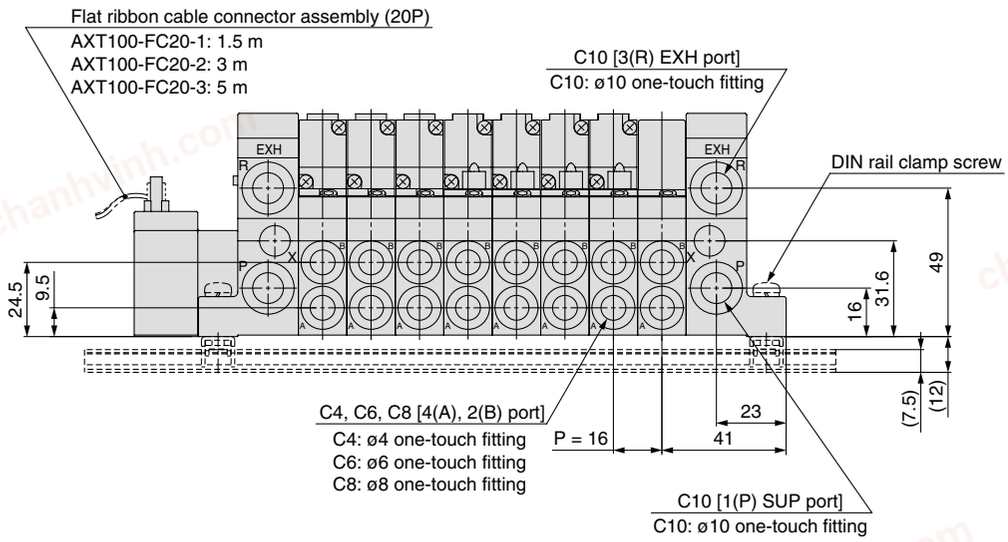

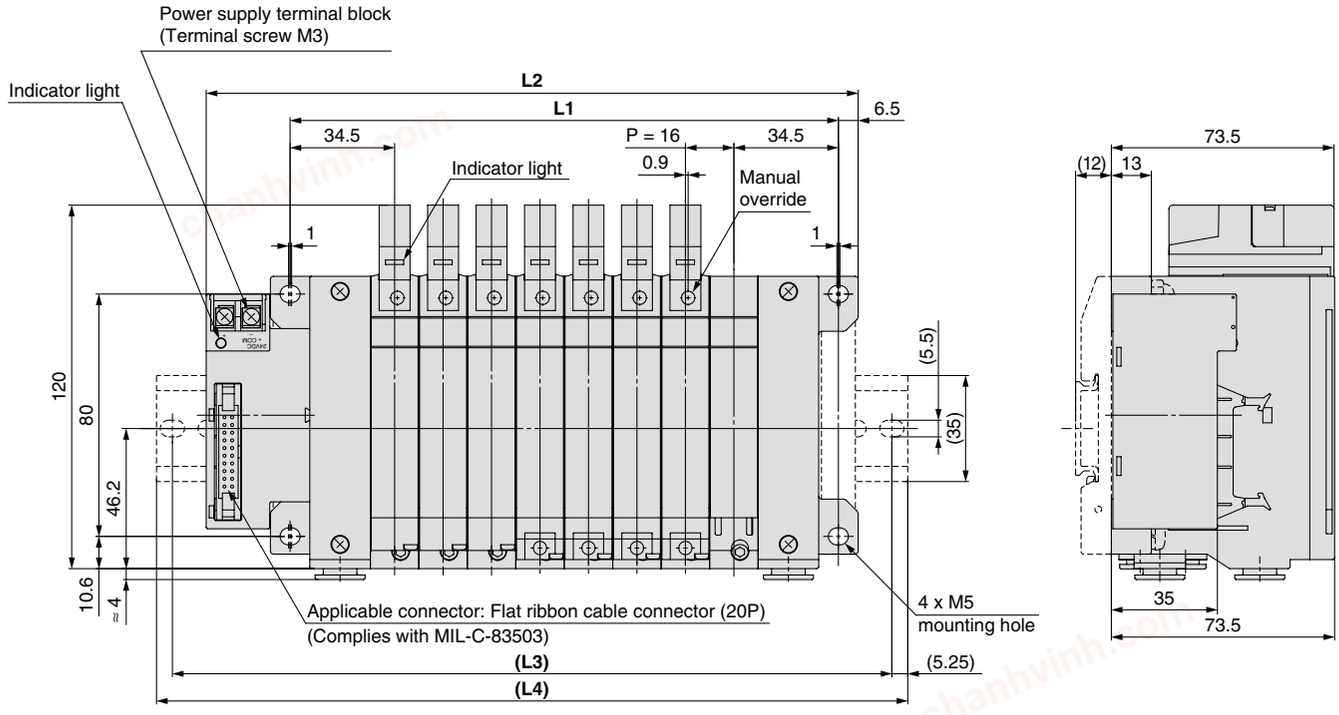

Dimensions

Formula L1 = 16n + 53, L2 = 16n + 87 n: Station (Maximum 16 stations)

L \ n	2	3	4	5	6	7	8	9	10	11	12	13	14	15	16
L1	85	101	117	133	149	165	181	197	213	229	245	261	277	293	309
L2	119	135	151	167	183	199	215	231	247	263	279	295	311	327	343
(L3)	150	162.5	175	187.5	212.5	225	237.5	262.5	275	287.5	300	325	337.5	350	362.5
(L4)	160.5	173	185.5	198	223	235.5	248	273	285.5	298	310.5	335.5	348	360.5	373

chanhvinh.com

T Series VQ1000/2000 kit (Terminal block box)

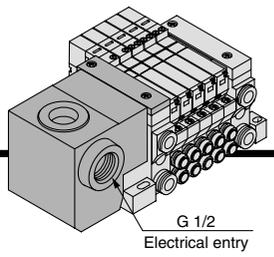

VV5Q11

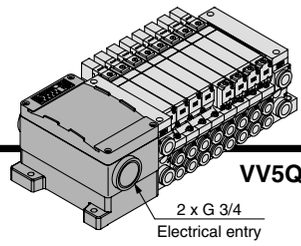

VV5Q21

IP65 compliant

- **This kit has a small terminal block inside a junction box. The electrical entry port {VQ1000: G 1/2, VQ2000: G 3/4} permits connection of conduit fittings.**
- **Maximum stations: 24 (VQ1000), 20 (VQ2000)**
- **Enclosure: Dust-tight, Water-jet-proof (IP65) compatible (Series VQ2000)**

Manifold Specifications

Series	Piping specifications			Applicable stations
	Piping direction	Port size		
		1(P), 3(R)	4(A), 2(B)	
VQ1000	Side	C8	C3,C4,C6,M5	Max. 24 stations
VQ2000	Side	C10	C4,C6,C8	Max. 20 stations

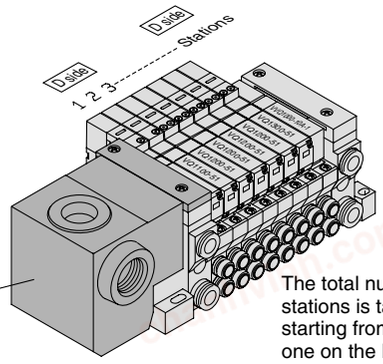

The total number of stations is tabulated starting from station one on the D-side.

Terminal Block Connection (VQ1000)

Open the terminal block cover to connect the wires to the terminal block.

Step 1. Removing the terminal block cover

Loosen the screws on the terminal block cover and open it in the direction shown by the arrow. The cover can then be removed from the terminal block.

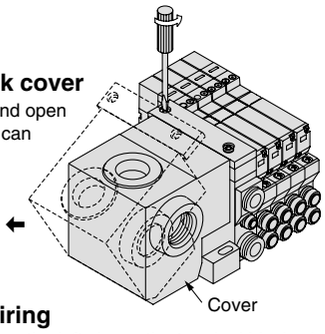

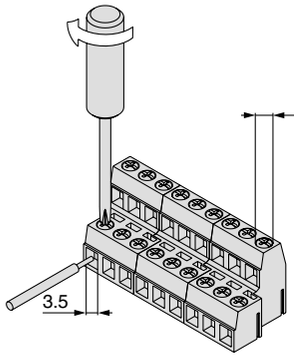

Step 2. Wiring

The diagram on the left shows the terminal block wiring schematic. All stations are provided with double solenoid wiring. Insert each lead wire into the terminal opening and tighten the screw directly above.

How to connect is inserting the lead wire into the terminal window, then tighten the screw on the top. (Tightening torque: 0.25 to 0.35 N·m)

Step 3. Mounting the terminal block cover

Hook groove (a) on shaft (b) and close the cover. Then tighten the screws.

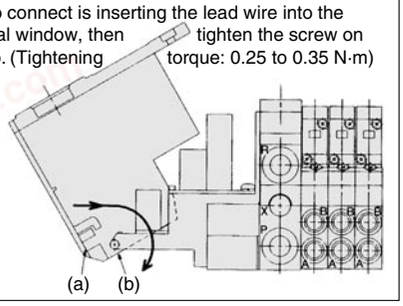

Electrical Wiring Specifications: VQ1000

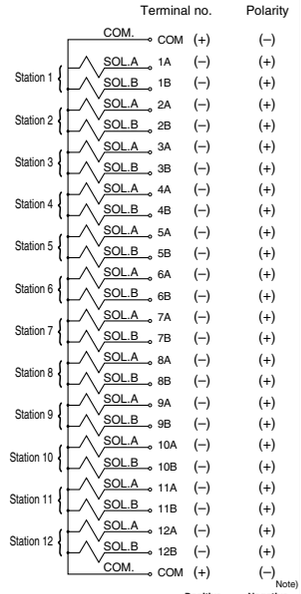

1st row 2nd row ····· 3rd row

The quantity of terminal blocks used depends on the number of manifold stations:

Manifold	Terminal block
2 to 8 stations	2 rows
9 to 12 stations	3 rows

As the standard electrical wiring specifications, double wiring (connected to SOL. A and SOL. B) is adopted for the internal wiring of each station for 12 stations or less, regardless of valve and option types.
Mixed single and double wiring is available as semi-standard. Refer to page 56 for details.

Note) When using the negative common specifications, use valves for negative common. Refer to "Semi-standard" on page 56 for details.

How to Order Manifold

VV5Q 1 1 – 08 C6 T 0 – □ – Q

Series

1	VQ1000
2	VQ2000

Manifold

1	Plug-in unit

Stations

02	2 stations
⋮	⋮
24 Note)	24 stations

Note 1) VQ2000: Max. 20 stations
Note 2) Refer to page 56 for details.

Note) For negative common specifications, refer to "Semi-standard" on page 56.

Cylinder port

Symbol	Port size	VQ1000	VQ2000
C3	With ø3.2 one-touch fitting	●	—
C4	With ø4 one-touch fitting	●	●
C6	With ø6 one-touch fitting	●	●
C8	With ø8 one-touch fitting	—	●
M5	M5 thread	●	—
CM Note 3)	Mixed sizes and with port plug	●	●
MM Note 4)	Mixed size for different types of piping, option installed	●	●

Note 1) Insert "L" (Top ported) or "B" (Bottom ported) for elbow type.
Example) B6 (Bottom ported elbow with ø6 one-touch fitting)
Note 2) Indicate "LM" for models with elbow fittings and mixed cylinder port sizes.
Note 3) Indicate "Mixed sizes and with port plug" by means of the manifold specification sheet.
Note 4) When selecting the mixed size for different types of piping, dual flow fitting assembly, or double check block (direct mounting), enter "MM" and give instructions in the manifold specification sheet.
Note 5) Inch-size one-touch fittings are available. Refer to "Semi-standard" on page 57 for details.

CE compliant

Note) DC specification only

Option

Symbol	Option	VQ1000	VQ2000
—	None	●	●
B Note 2)	With back pressure check valve	●	●
D	DIN rail mounting	●	●
D0	With DIN rail bracket (Without DIN rail)	●	●
D□ Note 5)	DIN rail length specified (□: Stations 02 to 24)	●	●
G1 Note 4)	1 set of regulator unit	●	—
G2 Note 4)	2 sets of regulator unit		
G3 Note 4)	3 sets of regulator unit		
K Note 5)	Special wiring spec. (Except double wiring)	●	●
N	With name plate	●	●
R Note 6)	External pilot	●	●
S	Direct EXH outlet with built-in silencer	●	●
W	Enclosure: Dust-tight, Water-jet-proof (IP65)	—	●

Note 1) When two or more symbols are specified, indicate them alphabetically.
Example) -BRS
Note 2) Models with a suffix "-B" have check valves for prevention of back pressure at all manifold stations. When a back pressure check valve is desired, and is to be installed only in certain manifold stations, specify the mounting position by means of the manifold specification sheet.
Note 3) The number of stations that may be displayed is longer than the manifold number of stations.
Note 4) Specify the mounting position by means of the manifold specification sheet.
Note 5) Specify the wiring specifications by means of the manifold specification sheet.
Note 6) Indicate "R" for the valve with external pilot.

chanhvinh.com

● Terminal Block Wiring (VQ2000)

Open the terminal block cover to connect the wires to the terminal block.

Step 1. Removing the terminal block cover

Loosen mounting screws (4 pcs.) on the terminal block cover and remove the cover.

Step 2. Wiring

Loosen screws on the terminal block, connect wiring and complete it by tightening screws.(Tightening torque: 0.5 to 0.7 N·m)

The diagram on the right shows the terminal block wiring. All stations are provided with double wiring regardless of the valves which are mounted.

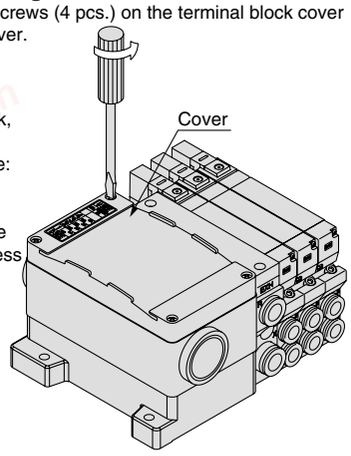

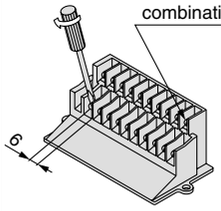

Applicable crimped terminal:
1.25-3S, 1.25Y-3,
1.25Y-3N, 1.25Y-3.5

Step 3. Mounting the terminal block cover

Securely tighten the screws after confirming that the gasket is installed correctly.
(Tightening torque: 0.7 to 1.2 N·m)

● Special Wiring Specifications: VQ2000

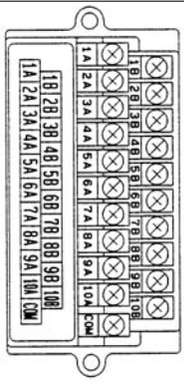

As the standard electrical wiring specifications, double wiring (connected to SOL. A and SOL. B) is adopted for the internal wiring of each station for 10 stations or less, regardless of valve and option types.
Mixed single and double wiring is available as semi-standard. Refer to page 56 for details.

Note) When using the negative common specifications, use valves for negative common.

Refer to "Semi-standard" on page 56 for details.

	Terminal no.	Polarity	
			Note)
		Positive COM spec.	Negative COM spec.
Station 1	SOL.A 1A	(–)	(+)
	SOL.B 1B	(–)	(+)
Station 2	SOL.A 2A	(–)	(+)
	SOL.B 2B	(–)	(+)
Station 3	SOL.A 3A	(–)	(+)
	SOL.B 3B	(–)	(+)
Station 4	SOL.A 4A	(–)	(+)
	SOL.B 4B	(–)	(+)
Station 5	SOL.A 5A	(–)	(+)
	SOL.B 5B	(–)	(+)
Station 6	SOL.A 6A	(–)	(+)
	SOL.B 6B	(–)	(+)
Station 7	SOL.A 7A	(–)	(+)
	SOL.B 7B	(–)	(+)
Station 8	SOL.A 8A	(–)	(+)
	SOL.B 8B	(–)	(+)
Station 9	SOL.A 9A	(–)	(+)
	SOL.B 9B	(–)	(+)
Station 10	SOL.A 10A	(–)	(+)
	SOL.B 10B	(–)	(+)
	COM.	(+)	(–)

How to Order Valves

VQ 1 1 0 0 ☐ – 5 ☐ ☐ ☐ 1 – Q

Series

1	VQ1000
2	VQ2000

Type of actuation

1	2-position single
2	2-position double
3	3-position closed centre
4	3-position exhaust centre
5	3-position pressure centre
A	4-position dual port (N.C. +N.C.)
B	4-position dual port (N.O. +N.O.)
C	4-position dual port (N.C. +N.O.)

Seal

0	Metal seal
1	Rubber seal

Function

Symbol	Specifications
—	Standard
B	High-speed response type
K Note 1)	High-pressure type (1.0 MPa)
N Note 2)	Negative common
R Note 2)	External pilot

Coil voltage

5	24 VDC
6	12 VDC

Light/surge voltage suppressor

—	Yes
E	None

Manual override

—	Non-locking push type (Tool required)
B	Locking type (Tool required)
C	Locking type (Manual)
D	Slide locking type (Manual)

Enclosure

—	Dust-protected
W Note)	Dust-tight, Water-jet-proof (IP65)

Note) VQ2000 only

CE compliant

Note) DC specification only

How to Order Manifold Assembly

Specify the part numbers for valves and options together beneath the manifold base part number.

<Example>

Terminal block box kit

VV5Q11-08C6T0-Q ··· 1 set–Manifold base part no.
***VQ1100-51-Q ····· 2 sets–Valve part no. (Stations 1 to 2)**
***VQ1200-51-Q ····· 4 sets–Valve part no. (Stations 3 to 6)**
***VQ1300-51-Q ····· 1 set–Valve part no. (Station 7)**
***VVQ1000-10A-1 ····· 1 set–Blanking plate part no. (Station 8)**

Prefix the asterisk to the part nos. of the solenoid valve, etc.

Write sequentially from the 1st station on the D-side. When part nos. written collectively are complicated, specify them by means of the manifold specification sheet.

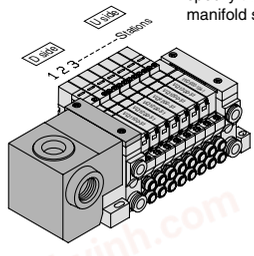

⚠Caution

Use the standard specification when continuously energizing for long periods of time.

Note 1) Metal seal only
Note 2) Refer to "Semi-standard" on pages 56 to 57 for external pilot and negative common specifications.
Note 3) When two or more symbols are specified, indicate them alphabetically. Combination of [B] and [K] is not possible.

chanhvinh.com

T Series VQ1000/2000
kit (Terminal block box)

VV5Q11

The dashed lines and dimensions in parentheses indicate DIN rail mounting [-D].

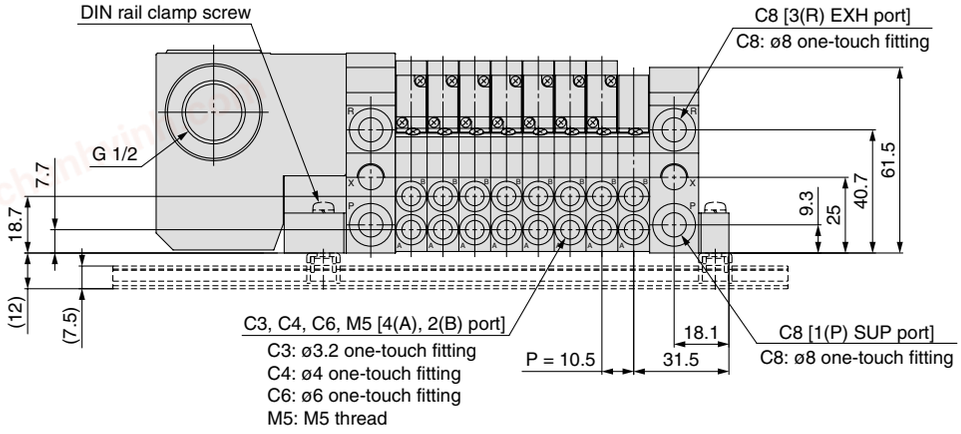

D side Stations 1 2 3 4 5 6 7 8 n U side

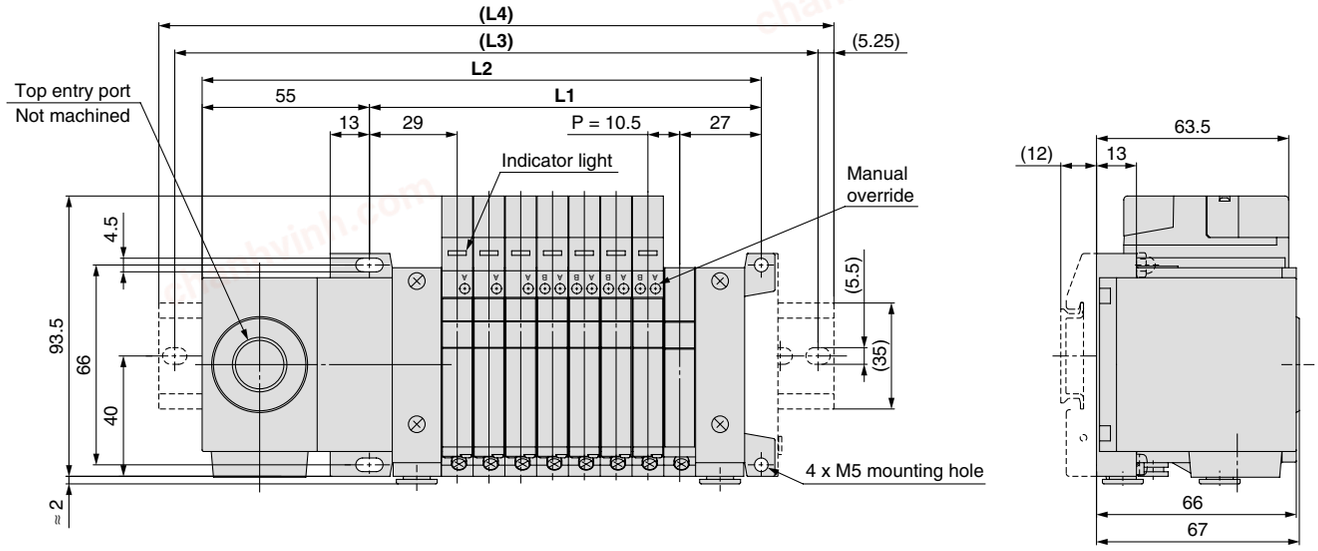

Dimensions

Formula L1 = 10.5n + 45.5, L2 = 10.5n + 105 n: Station (Maximum 24 stations)

L \ n	2	3	4	5	6	7	8	9	10	11	12	13	14	15	16	17	18	19	20	21	22	23	24
L1	66.5	77	87.5	98	108.5	119	129.5	140	150.5	161	171.5	182	192.5	203	213.5	224	234.5	245	255.5	266	276.5	287	297.5
L2	126	136.5	147	157.5	168	178.5	189	199.5	210	220.5	231	241.5	252	262.5	273	283.5	294	304.5	315	325.5	336	346.5	357
(L3)	150	162.5	175	187.5	187.5	200	212.5	225	237.5	250	262.5	262.5	275	287.5	300	312.5	325	325	337.5	350	362.5	375	387.5
(L4)	160.5	173	185.5	198	198	210.5	223	235.5	248	260.5	273	273	285.5	298	310.5	323	335.5	335.5	348	360.5	373	385.5	398

With ejector unit: Formula L1 = 10.5n + 29.7 + (Number of ejector units x 26.7)
L2 = 10.5n + 88.8 + (Number of ejector units x 26.7)
L4 is L2 plus about 30.

chanhvinh.com

VV5Q21

The dashed lines indicate DIN rail mounting [-D] (with DIN rail mounting bracket).

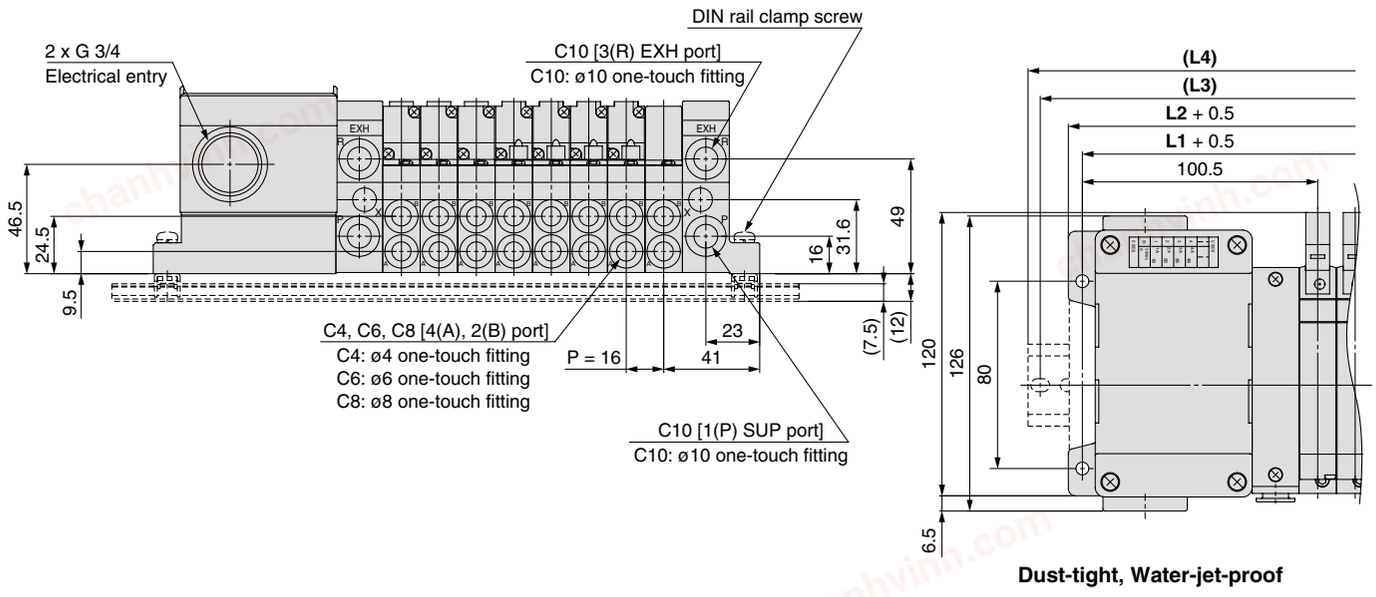

Dust-tight, Water-jet-proof

D side Stations -- 1 -- 2 -- 3 -- 4 -- 5 -- 6 -- 7 -- 8 -- n U side

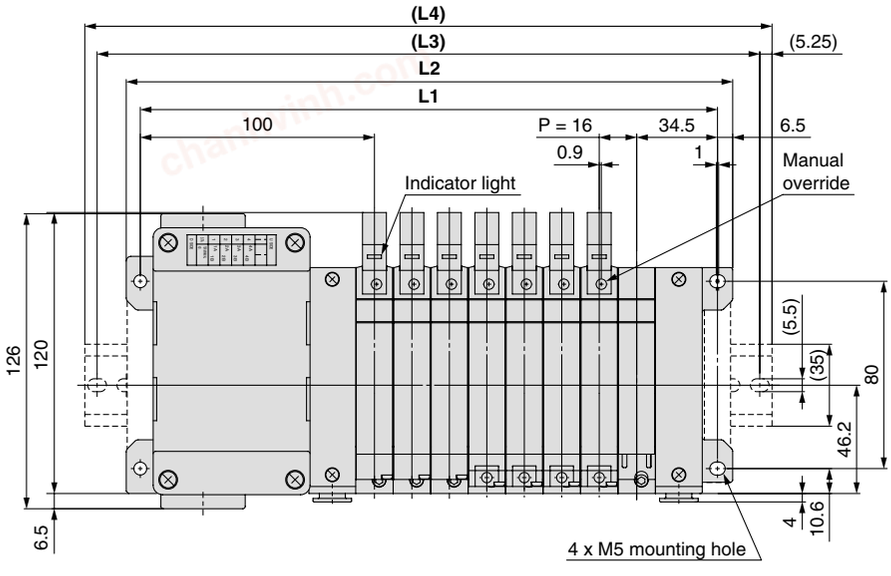

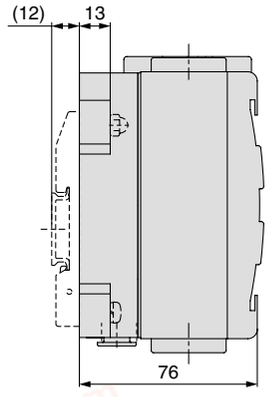

Dimensions

Formula L1 = 16n + 118.5, L2 = 16n + 131 n: Station (Maximum 20 stations)

L \ n	2	3	4	5	6	7	8	9	10	11	12	13	14	15	16	17	18	19	20
L1	150.5	166.5	182.5	198.5	214.5	230.5	246.5	262.5	278.5	294.5	310.5	326.5	342.5	358.5	374.5	390.5	406.5	422.5	438.5
L2	163	179	195	211	227	243	259	275	291	307	323	339	355	371	387	403	419	435	451
(L3)	187.5	200	225	237.5	250	262.5	287.5	300	312.5	337.5	350	362.5	375	400	412.5	425	450	462.5	475
(L4)	198	210.5	235.5	248	260.5	273	298	310.5	323	348	360.5	373	385.5	410.5	423	435.5	460.5	473	485.5

chanhvinh.com

L Series VQ1000/2000
kit (Lead wire)

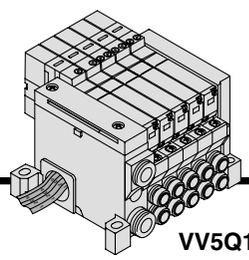
VV5Q11

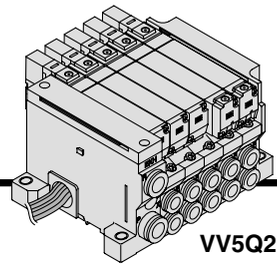
VV5Q21

IP65 compliant

- **Direct electrical entry. Models with one or more stations are available.**
- **(SUP) and (EXH) ports are provided on one side for further space savings.**
- **Maximum stations are 8.**
- **Enclosure: Dust-tight, Water-jet-proof (IP65) compatible (Series VQ2000)**

Wiring Specifications: Positive COM ●

Three lead wires are attached to each station regardless of the type of valve which is mounted.
The red wire is for COM connection.

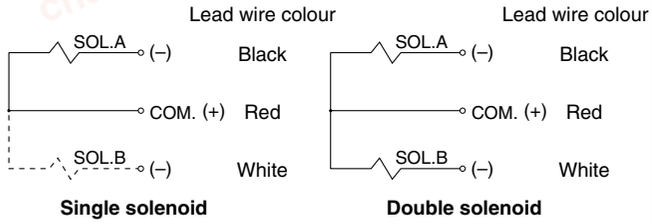

Single solenoid **Double solenoid**

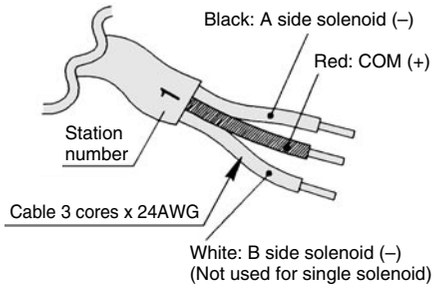

Use any of the below cable lead wire assembly to change the lead wire length:

Lead wire assembly with connector

Lead wire length	Part no.
0.6 m	VVQ1000-84A-6-✻
1.5 m	VVQ1000-84A-15-✻
3 m	VVQ1000-84A-30-✻

✻ Station number 1 to 8

Manifold Specifications

Series	Piping specifications			Applicable stations
	Piping direction	Port size		
		1(P), 3(R)	4(A), 2(B)	
VQ1000	Side	C8	C3, C4, C6, M5	Max. 8 stations
VQ2000	Side	C10	C6, C8	Max. 8 stations

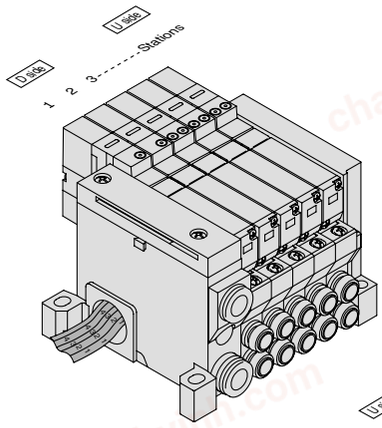

VV5Q11

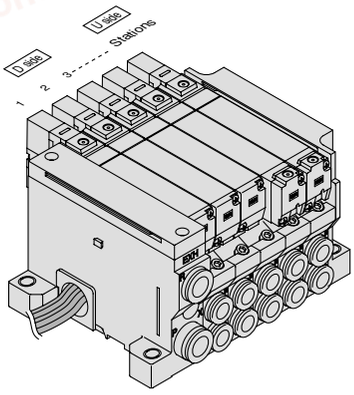

The total number of stations is tabulated on the D-side.

VV5Q21

How to Order Manifold

VV5Q [1] [1] – [06] [C6] L [1] – [ ] – [Q]

Series

1	VQ1000
2	VQ2000

Manifold

1	Plug-in unit

Stations

01	1 station
⋮	⋮
08	8 stations

Note) For negative common specifications, refer to "Semi-standard" on page 56.

Cable (Length)

0	Cable length 0.6 m
1	Cable length 1.5 m
2	Cable length 3 m

Cylinder port

Symbol	Port size	VQ1000	VQ2000
C3	With ø3.2 one-touch fitting	●	—
C4	With ø4 one-touch fitting	●	●
C6	With ø6 one-touch fitting	●	●
C8	With ø8 one-touch fitting	—	●
M5	M5 thread	●	—
CM Note 3)	Mixed sizes and with port plug	●	●
MM Note 4)	Mixed size for different types of piping, option installed	●	●

Note 1) Insert "L" (Top ported) or "B" (Bottom ported) for elbow type.
Example) B6 (Bottom ported elbow with ø6 one-touch fitting)
Note 2) Indicate "LM" for models with elbow fittings and mixed cylinder port sizes.
Note 3) Indicate "Mixed sizes and with port plug" by means of the manifold specification sheet.
Note 4) When selecting the mixed size for different types of piping, dual flow fitting assembly, or double check block (direct mounting), enter "MM" and give instructions in the manifold specification sheet.
Note 5) Inch-size one-touch fittings are available. Refer to "Semi-standard" on page 57 for details.

Option

Symbol	Option	VQ1000	VQ2000
—	None	●	●
B Note 2)	With back pressure check valve	●	●
D	DIN rail mounting	●	●
D0	With DIN rail bracket (Without DIN rail)	●	●
D□ Note 3)	DIN rail length specified (□: Stations 02 to 24)	●	●
G1 Note 4)	1 set of regulator unit	●	—
G2 Note 4)	2 sets of regulator unit	●	—
G3 Note 4)	3 sets of regulator unit	●	—
N	With name plate	●	●
R Note 5)	External pilot	●	●
S	Direct EXH outlet with built-in silencer	●	●
W	Enclosure: Dust-tight, Water-jet-proof (IP65)	—	●

Note 1) When two or more symbols are specified, indicate them alphabetically. Example) -BRS
Note 2) Models with a suffix "-B" have check valves for prevention of back pressure at all manifold stations. When a back pressure check valve is desired, and is to be installed only in certain manifold stations, specify the mounting position by means of the manifold specification sheet.
Note 3) The number of stations that may be displayed is longer than the manifold number of stations.
Note 4) Specify the mounting position by means of the manifold specification sheet.
Note 5) Indicate "R" for the valve with external pilot.

CE compliant

Note) DC specification only

chanhvinh.com

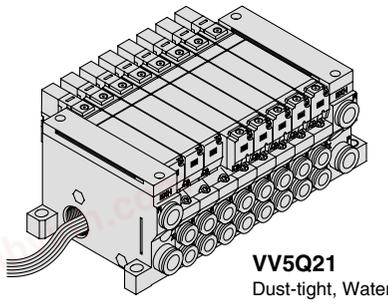

VV5Q21
Dust-tight, Water-jet-proof

● Wiring Specifications: Negative COM (Semi-standard)

Three lead wires are attached to each station regardless of the type of valve which is mounted.
The black wire is for COM connection.

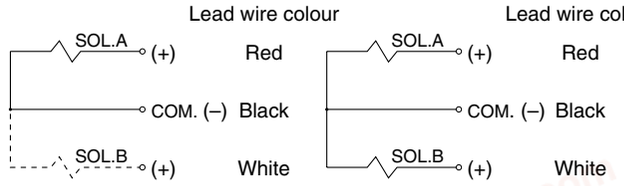

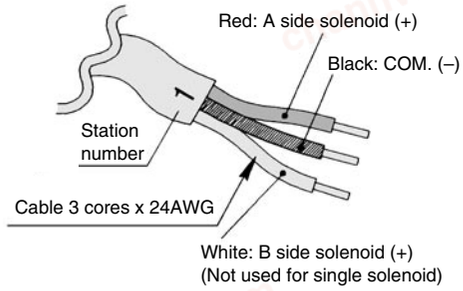

Lead wire assembly with connector

Lead wire length	Part no.
0.6 m	VVQ1000-84AN-6-∗
1.5 m	VVQ1000-84AN-15-∗
3 m	VVQ1000-84AN-30-∗

∗ Station number 1 to 8

Note) When using the negative common specifications, use valves for negative common. For negative common specifications, refer to “Semi-standard” on page 56.

How to Order Valves

VQ 1 1 0 0 ☐ – 5 ☐ ☐ ☐ 1 – Q

Series

1	VQ1000
2	VQ2000

Seal

0	Metal seal
1	Rubber seal

Type of actuation

1	2-position single
2	2-position double
3	3-position closed centre
4	3-position exhaust centre
5	3-position pressure centre
A	4-position dual port (N.C. +N.C.)
B	4-position dual port (N.O. +N.O.)
C	4-position dual port (N.C. +N.O.)

Function

Symbol	Specifications
—	Standard
B	High-speed response type
K Note 1)	High-pressure type (1.0 MPa)
N Note 2)	Negative common
R Note 2)	External pilot

Enclosure

—	Dust-protected
W Note)	Dust-tight, Water-jet-proof (IP65)

Note) VQ2000 only

Manual override

—	Non-locking push type (Tool required)
B	Locking type (Tool required)
C	Locking type (Manual)
D	Slide locking type (Manual)

Light/surge voltage suppressor

—	Yes
E	None

Coil voltage

5	24 VDC
6	12 VDC

CE compliant

Note) DC specification only

Note 1) Metal seal only
Note 2) For external pilot and negative common specifications, refer to “Semi-standard” on pages 56 to 57.
Note 3) When two or more symbols are specified, indicate them alphabetically. Combination of [B] and [K] is not possible.

How to Order Manifold Assembly

Specify the part numbers for valves and options together beneath the manifold base part number.

<Example>

Lead wire kit with cable (3 m)

VV5Q11-06C6L2-Q ··· 1 set–Manifold base part no.
∗VQ1100-51-Q ····· 2 sets–Valve part no. (Stations 1 to 2)
∗VQ1200-51-Q ····· 2 sets–Valve part no. (Stations 3 to 4)
∗VQ1300-51-Q ····· 1 set–Valve part no. (Station 5)
∗VVQ1000-10A-1 ····· 1 set–Blanking plate part no. (Station 6)

Prefix the asterisk to the part nos. of the solenoid valve, etc.

Write sequentially from the 1st station on the D-side. When part nos. written collectively are complicated, specify them by means of the manifold specification sheet.

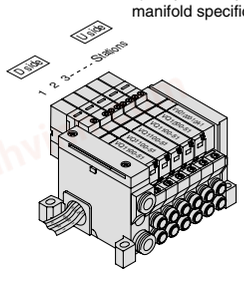

⚠Caution

Use the standard specification when continuously energizing for long periods of time.

chanhvinh.com

VV5Q11

The dashed lines indicate DIN rail mounting [-D] (with DIN rail mounting bracket).

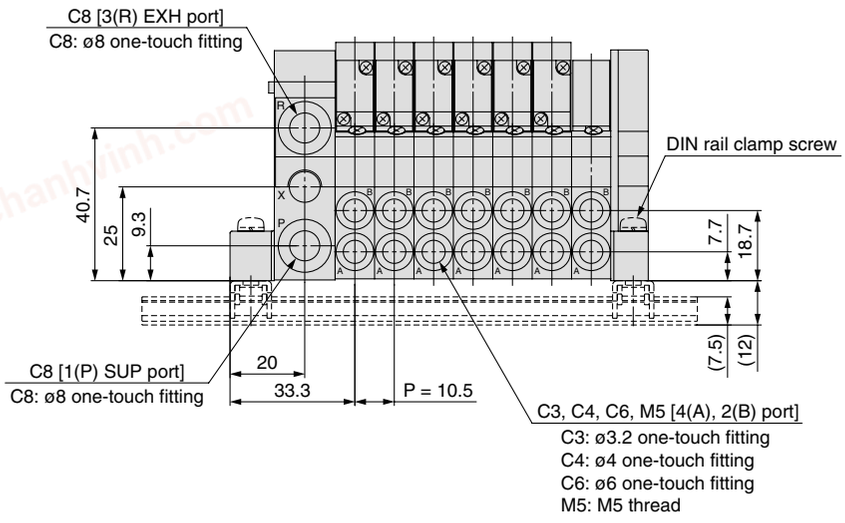

D side Stations -- 1 -- 2 -- 3 -- 4 -- 5 -- 6 -- 7 -- n U side

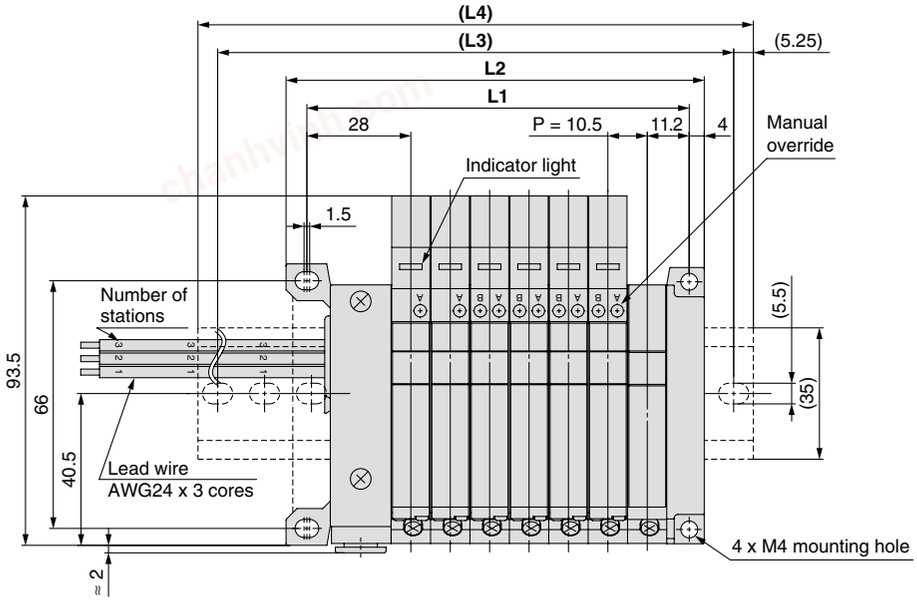

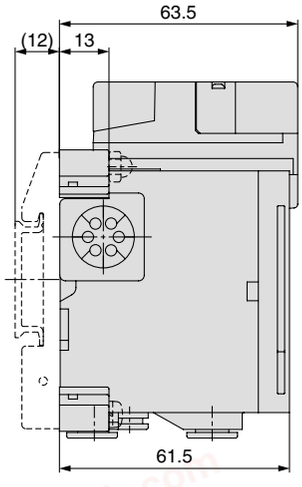

Dimensions

Formula L1 = 10.5n + 28.5, L2 = 10.5n + 38
n: Station (Maximum 8 stations)

L \ n	1	2	3	4	5	6	7	8
L1	39	49.5	60	70.5	81	91.5	102	112.5
L2	48.5	59	69.5	80	90.5	101	111.5	122
(L3)	75	87.5	87.5	100	112.5	125	137.5	150
(L4)	85.5	98	98	110.5	123	135.5	148	160.5

With ejector unit: Formula L1 = 10.5n + 28.5 + (Number of ejector units x 26.7)
L2 = 10.5n + 38 + (Number of ejector units x 26.7)
L4 is L2 plus about 30.

chanhvinh.com

VV5Q21

The dashed lines indicate DIN rail mounting [-D] (with DIN rail mounting bracket).

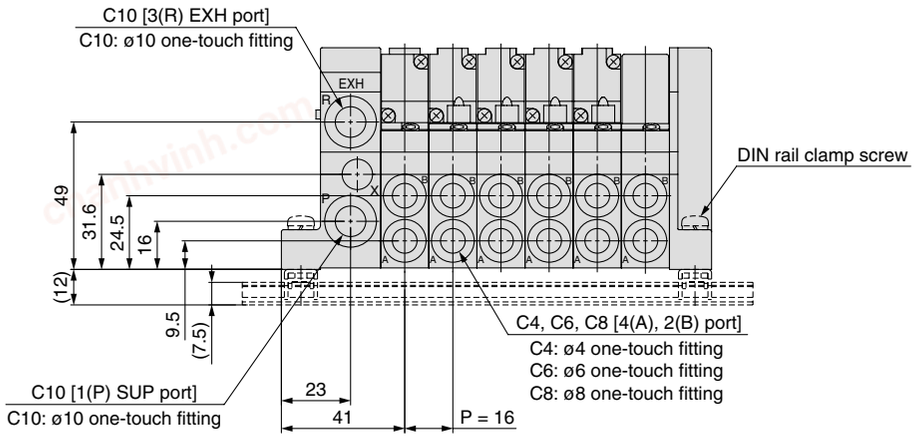

D side Stations --- 1 --- 2 --- 3 --- 4 --- 5 --- 6 --- n U side

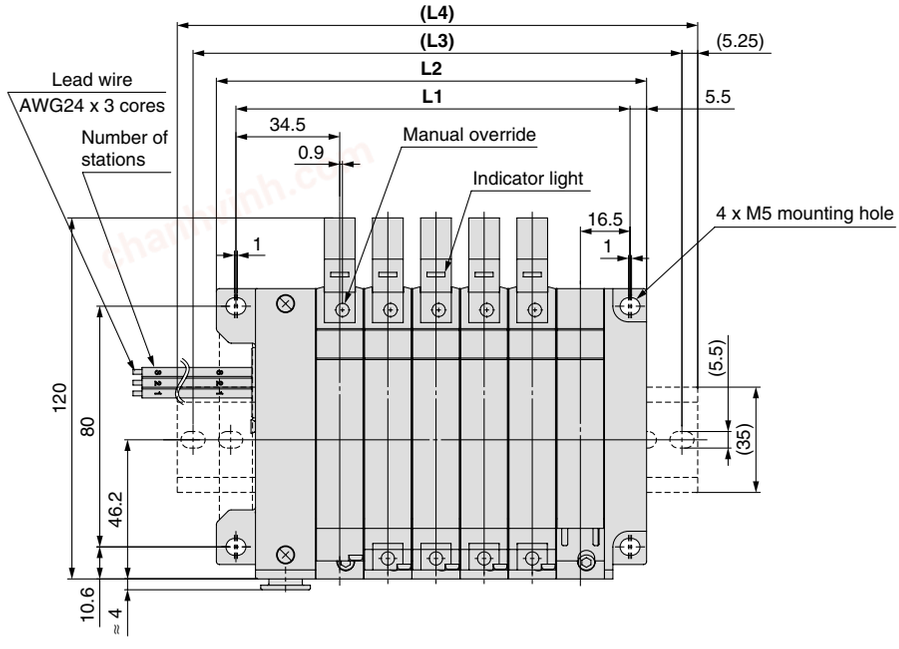

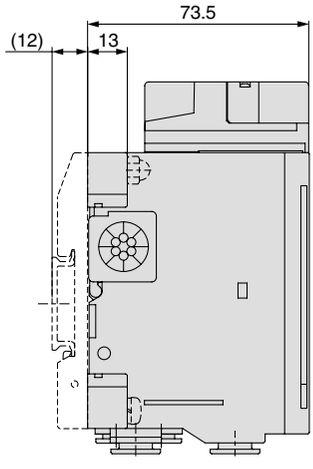

Dust-tight, Water-jet-proof

Formula L1 = 16n + 35, L2 = 16n + 47
n: Station (Maximum 8 stations)

Dimensions

L \ n	1	2	3	4	5	6	7	8
L1	51	67	83	99	115	131	147	163
L2	63	79	95	111	127	143	159	175
(L3)	87.5	100	125	137.5	150	162.5	184.5	200
(L4)	98	110.5	135.5	148	160.5	173	198	210.5

chanhvinh.com

S Series VQ1000/2000

kit (Serial transmission) Base mounted plug-in manifold: For EX510 Gateway-type serial transmission system

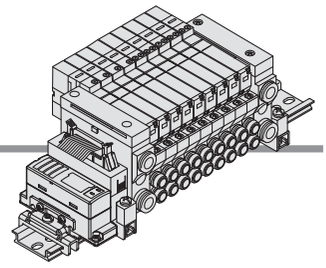

How to Order Manifold

VV5Q 1 1 – SB □ 08 □ – □ – Q

Manifold series

1	VQ1000
2	VQ2000

SI unit specifications

—	NPN output (+COM.)
N	PNP output (–COM.)

Valve stations

Symbol	Stations
01	1 station
⋮	⋮
08	8 stations

Note) Max. 16 stations. (Special wiring specifications)

SI unit part no.

Symbol	SI unit specifications	SI unit part no.
—	NPN output (+COM.)	EX510-S002A
N	PNP output (–COM.)	EX510-S102A

Cylinder port

Symbol		Port size	VQ1000	VQ2000
Metric size	C3	With ø3.2 one-touch fitting	○	—
	C4	With ø4 one-touch fitting	○	○
	C6	With ø6 one-touch fitting	○	○
	C8	With ø8 one-touch fitting	—	○
	M5	M5 thread	○	—
	CM Note 1)	With mixed sizes and with port plug	○	○
	L3	Top ported elbow with ø3.2 one-touch fitting	○	—
	L4	Top ported elbow with ø4 one-touch fitting	○	○
	L6	Top ported elbow with ø6 one-touch fitting	○	○
	L8	Top ported elbow with ø8 one-touch fitting	—	○
	L5	Top ported elbow M5 thread	○	—
	B3	Bottom ported elbow with ø3.2 one-touch fitting	○	—
	B4	Bottom ported elbow with ø4 one-touch fitting	○	○
	B6	Bottom ported elbow with ø6 one-touch fitting	○	○
	B8	Bottom ported elbow with ø8 one-touch fitting	—	○
	B5	Bottom ported elbow M5 thread	○	—
	LM Note 1)	Elbow port, mixed sizes	○	○
Inch size	N1	ø1/8" with one-touch fitting	○	—
	N3	ø5/32" with one-touch fitting	○	○
	N7	ø1/4" with one-touch fitting	○	○
	N9	ø5/16" with one-touch fitting	—	○
	M5T	UNF10-32 thread	○	—
	NM Note 1)	With mixed sizes and with port plug	○	○
	LN1	Top ported elbow with ø1/8" one-touch fitting	○	—
	LN3	Top ported elbow with ø5/32" one-touch fitting	○	○
	LN7	Top ported elbow with ø1/4" one-touch fitting	○	○
	LN9	Top ported elbow with ø5/16" one-touch fitting	—	○
	L5T	Top ported elbow UNF10-32 thread	○	—
	BN1	Bottom ported elbow with ø1/8" one-touch fitting	○	—
	BN3	Bottom ported elbow with ø5/32" one-touch fitting	○	○
	BN7	Bottom ported elbow with ø1/4" one-touch fitting	○	○
	BN9	Bottom ported elbow with ø5/16" one-touch fitting	—	○
	B5T	Bottom ported elbow UNF10-32 thread	○	—
	LNM Note 1)	Elbow port, mixed sizes	○	○
MM Note 2)		Mixed size for different types of piping, option installed	○	○

Note 1) Indicate "Mixed sizes and with port plug" in the manifold specification sheet.
Note 2) When selecting the mixed size for different types of piping, dual flow fitting assembly, or double check block (direct mounting), enter "MM" and give instructions in the manifold specification sheet.

Refer to Best Pneumatics No. ① for details on EX510 gateway-type serial transmission system.

Option

Symbol	Option
—	None
B Note 2)	With back pressure check valve
D Note 8)	DIN rail mounting
D□ Note 7)	DIN rail length specified (□: Stations 02 to 16)
G1 Note 3) Note 6)	1 set of regulator unit
G2 Note 3) Note 6)	2 sets of regulator unit
G3 Note 3) Note 6)	3 sets of regulator unit
K Note 4)	Special wiring spec. (Except double wiring)
N	With name plate
R Note 5)	with external pilot
S	Direct EXH outlet with built-in silencer

Note 1) When two or more symbols are specified, indicate them alphabetically. Example) -BRS
Note 2) Models with a suffix "-B" have check valves for prevention of back pressure at all manifold stations. When a back pressure check valve is desired, and is to be installed only in certain manifold stations, specify the mounting position by means of the manifold specification sheet.
Note 3) Specify the mounting position by means of the manifold specification sheet.
Note 4) Specify the wiring specifications by means of the manifold specification sheet.
Note 5) Indicate "R" for the valve with external pilot.
Note 6) VQ1000 only
Note 7) The number of stations that may be displayed is longer than the manifold number of stations.
Note 8) Need to be chosen with "D" or "D□".

How to Order Manifold Assembly

Example

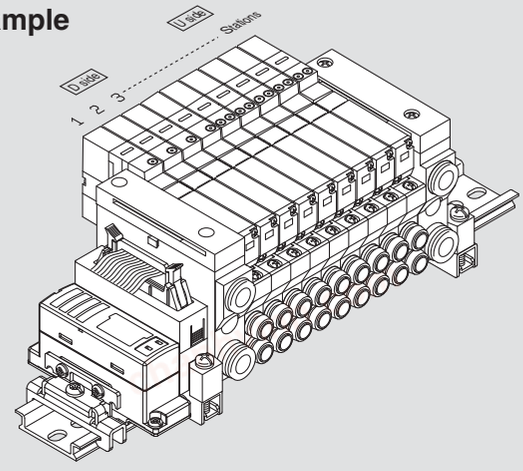

VV5Q11-SB08C6-D-Q ··· 1 set (SB kit, 8-station manifold part no.)
✻VQ1100-51-Q ····· 4 sets (Single type part no.)
✻VQ1200-51-Q ····· 3 sets (Double type part no.)
✻VQ1300-51-Q ····· 1 set (3 position type part no.)

→The asterisk denotes the symbol for assembly. Prefix it to the part nos. of the solenoid valve, etc.
→Enter in order starting from the first station on the D-side.

Add the valve and option part numbers under the manifold base part number. In the case of complex arrangement, specify them by means of the manifold specification sheet.

chanhvinh.com

How to Order Valves

VQ 1 1 0 0 ☐ – 5 ☐ 1 – Q

CE compliant

Series

1	VQ1000
2	VQ2000

Type of actuation

1		2-position single	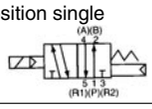
2	Metal	2-position double	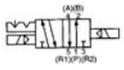
	Rubber	2-position double	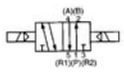
3		3-position closed centre	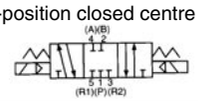
4		3-position exhaust centre	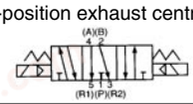
5		3-position pressure centre	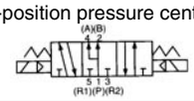
A Note)		4-position dual 3-port valve (A)	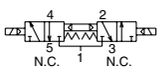
B Note)		4-position dual 3-port valve (B)	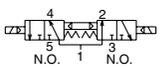
C Note)		4-position dual 3-port valve (C)	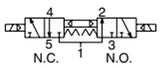

Note) Rubber seal only

Manual override

Nil: Non-locking push type (Tool required)

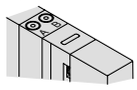

B: Locking type (Tool reguired)

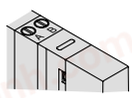

C: Locking type (Manual)

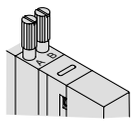

D: Slide locking type (Manual)

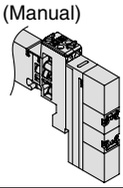

Rated voltage

5	24 VDC

Function

Symbol	Specifications
—	Standard (0.4 W)
B	High-speed response type (0.95 W)
K Note 1)	High-pressure type (1.0 MPa) [0.95 W]
N Note 2)	Negative common
R Note 2)	External pilot

Note 1) Metal seal only
Note 2) For external pilot and negative common specifications, refer to "Semi-standard" on pages 56 to 57.
Note 3) When two or more symbols are specified, indicate them alphabetically. Combination of [B] and [K] is not possible.

Seal

0	Metal seal
1	Rubber seal

chanhvinh.com

VV5Q11

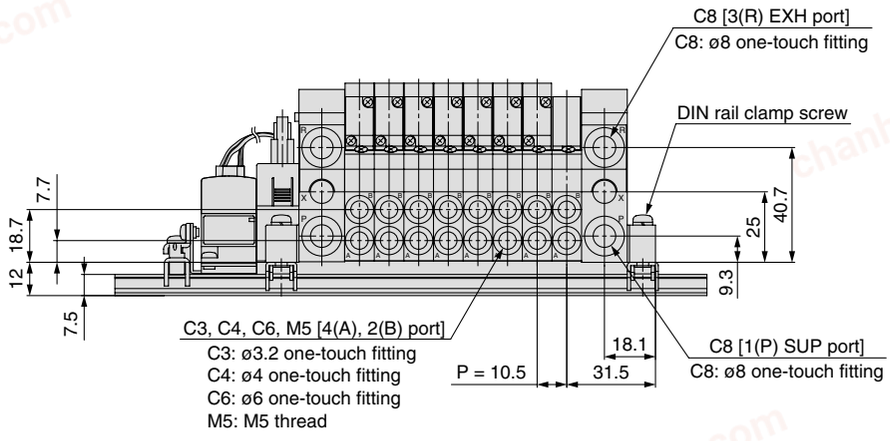

D side Stations 1 2 3 4 5 6 7 8 n U side

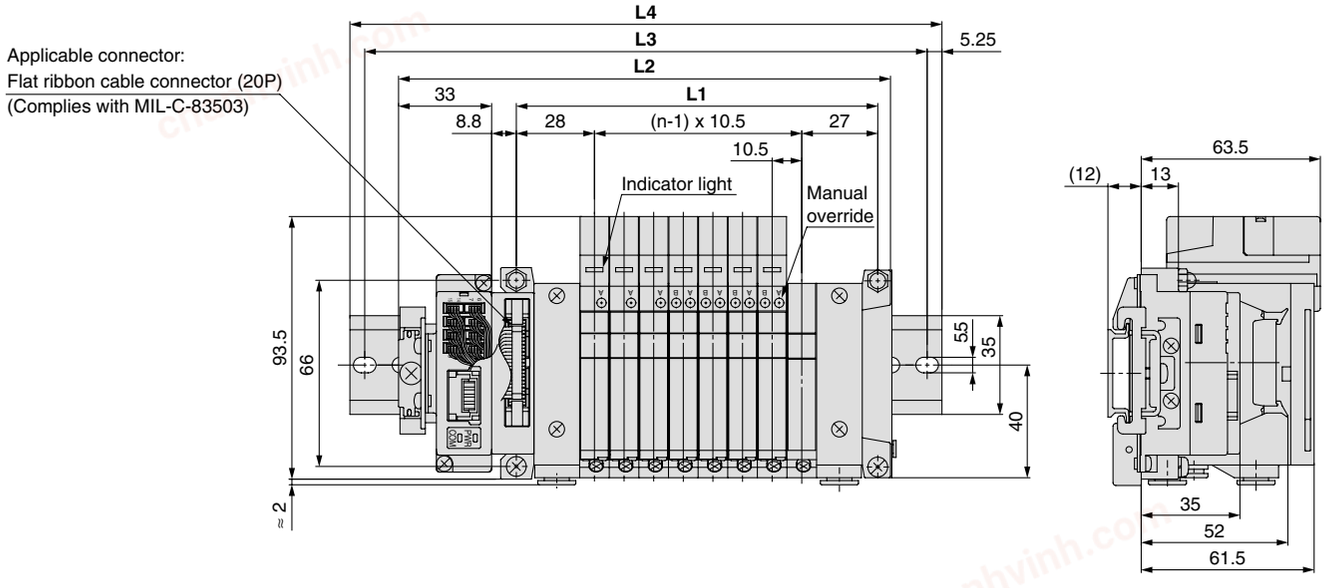

Dimensions Formula L1 = 10.5n + 44.5, L2 = 10.5n + 91 n: Station (Maximum 16 stations)

L \ n	1	2	3	4	5	6	7	8	9	10	11	12	13	14	15	16
L1	55	65.5	76	86.5	97	107.5	118	128.5	139	149.5	160	170.5	181	191.5	202	212.5
L2	101.5	112	122.5	133	143.5	154	164.5	175	185.5	196	206.5	217	227.5	238	248.5	259
L3	125	137.5	150	162.5	175	175	187.5	200	212.5	225	237.5	237.5	250	262.5	275	287.5
L4	135.5	148	160.5	173	185.5	185.5	198	210.5	223	235.5	248	248	260.5	273	285.5	298

chanhvinh.com

VV5Q21

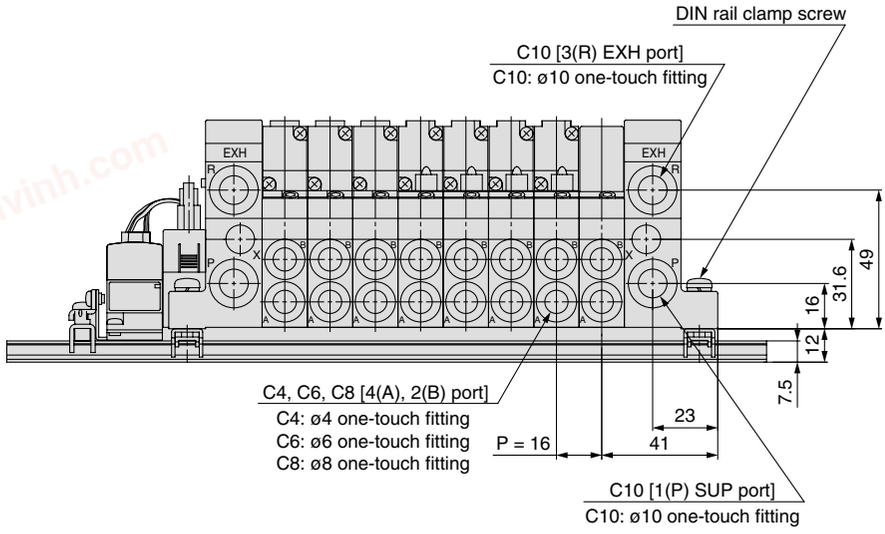

D side Stations -- 1 --- 2 --- 3 --- 4 --- 5 --- 6 --- 7 --- 8 --- n U side

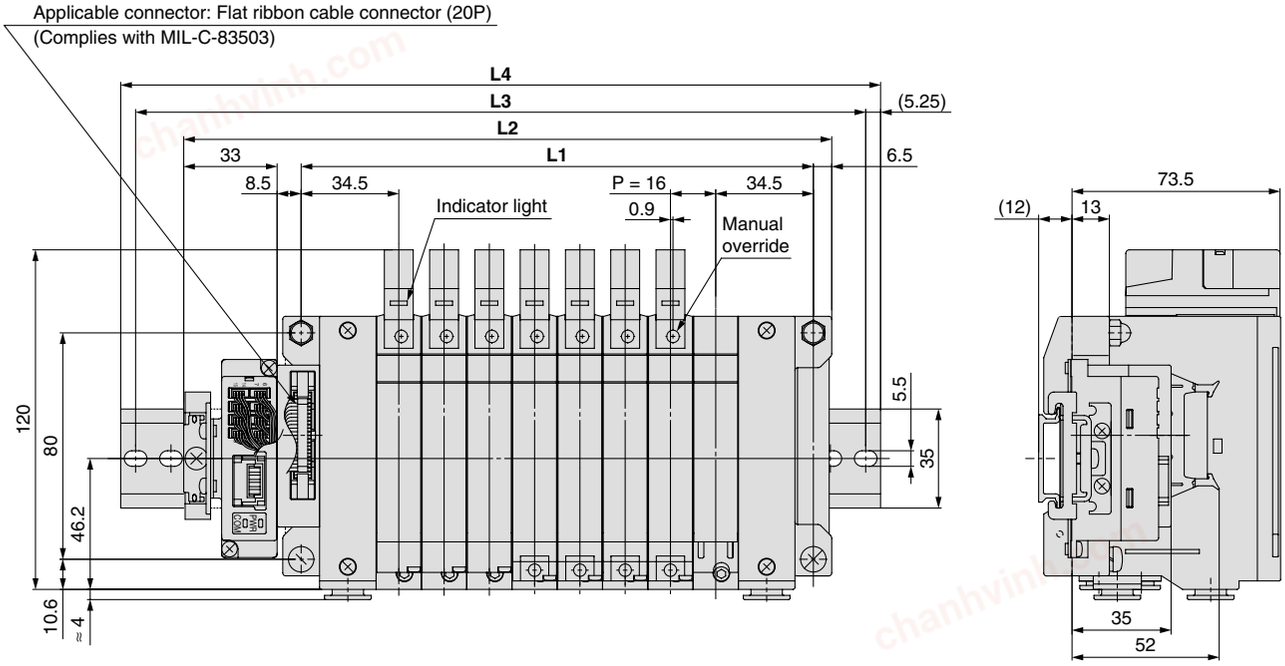

Dimensions

Formula L1 = 16n + 53, L2 = 16n + 101 n: Station (Maximum 16 stations)

L \ n	1	2	3	4	5	6	7	8	9	10	11	12	13	14	15	16
L1	69	85	101	117	133	149	165	181	197	213	229	245	261	277	293	309
L2	117	133	149	165	181	197	213	229	245	261	277	293	309	325	341	357
L3	137.5	162.5	175	187.5	212.5	225	237.5	250	275	287.5	300	312.5	337.5	350	362.5	387.5
L4	148	173	185.5	198	223	235.5	248	260.5	285.5	298	310.5	323	348	360.5	373	398

chanhvinh.com

S Series VQ1000/2000

kit (Serial transmission): For EX120/124 Integrated-type (Output) serial transmission system

IP65 compliant

- **The serial transmission system reduces wiring work, while minimizing wiring and saving space.**
- **Enclosure: Dust-tight, Water-jet-proof (IP65) compatible (Series VQ2000)**

Manifold Specifications

Series	Piping specifications			Applicable stations
	Piping direction	Port size		
		1(P), 3(R)	4(A), 2(B)	
VQ1000	Side	C8	C3, C4, C6, M5	Max. 16 stations
VQ2000	Side	C10	C4, C6, C8	Max. 16 stations

How to Order Manifold

VV5Q 1 1 – 08 C6 S V – ☐ – XP – Q

Series

1	VQ1000
2	VQ2000

Manifold

1	Plug-in unit

Stations

02	2 stations
⋮	⋮
16 Note)	16 stations

Note 1) Refer to page 56 for details.
Note 2) Max. 16 stations. (Specify a model with 9 to 16 stations by means of the manifold specification sheet.)

SI unit specifications

Symbol	Protocol	Stations
0	Without SI unit	Max. 16 stations
Q	DeviceNet™ System	Max.16 stations
R1	OMRON Corp.: CompoBus/S (16 outputs)	
R2	OMRON Corp.: CompoBus/S (8 outputs)	Max. 8 stations
V	CC-LINK	Max. 16 stations

Cylinder port

Symbol	Port size	VQ1000	VQ2000
C3	With ø3.2 one-touch fitting	●	—
C4	With ø4 one-touch fitting	●	●
C6	With ø6 one-touch fitting	●	●
C8	With ø8 one-touch fitting	—	●
M5	M5 thread	●	—
CM Note 3)	Mixed sizes and with port plug	●	●
MM Note 4)	Mixed size for different types of piping, option installed	●	●

Note 1) Insert "L" (Top ported) or "B" (Bottom ported) for elbow type.
Example) B6 (Bottom ported elbow with ø6 one-touch fitting)
Note 2) Indicate as "LM" for models with elbow fittings and mixed cylinder port sizes.
Note 3) Indicate "Mixed sizes and with port plug" by means of the manifold specification sheet.
Note 4) When selecting the mixed size for different types of piping, dual flow fitting assembly, or double check block (direct mounting), enter "MM" and give instructions in the manifold specification sheet.
Note 5) Inch-size one-touch fittings are available. Refer to "Semi-standard" on page 57 for details.

Dust-protected (-XP)

Suffix "-XP" to the end of the part number for the dust-protected SI units.
(Except Q option when the SI unit specifications are compatible with DeviceNet™.)

CE compliant

Option

Symbol	Option	VQ1000	VQ2000
—	None	●	●
B Note 2)	With back pressure check valve	●	●
D	DIN rail mounting	●	●
D☐ Note 3)	DIN rail mounting (☐: Stations 02 to 24)	●	●
G1 Note 4)	1 set of regulator unit	●	—
G2 Note 4)	2 sets of regulator unit		
G3 Note 4)	3 sets of regulator unit		
K Note 5)	Special wiring specifications (Except double wiring)	●	●
N	With name plate	●	●
R Note 6)	With external pilot	●	●
S	Direct EXH outlet with built-in silencer	●	●
W Note 7) Note 8)	Enclosure: Dust-tight, Water-jet-proof (IP65)	—	●

Note 1) When two or more symbols are specified, indicate them alphabetically.
Example) -BRS.
Note 2) Models with a suffix "-B" have check valves for prevention of back pressure at all manifold stations. When a back pressure check valve is desired, and is to be installed only in certain manifold stations, specify the mounting position by means of the manifold specification sheet.
Note 3) The number of stations that may be displayed is longer than the manifold number of stations.
Note 4) Specify the mounting position by means of the manifold specification sheet.
Note 5) Specify the wiring specifications by means of the manifold specification sheet.
Note 6) Indicate "R" for the valve with external pilot.
Note 7) A combination of "W" and "XP" is unavailable.
Note 8) Refer to "Dimensions" on page 48 for SI unit and valve, in case of W (Dust-tight, Water-jet-proof).

SI Unit Part No. (Without option W [Dust-protected (-XP) is included.])

Symbol	Protocol	SI unit part no.	CE compliant
Q	DeviceNet™	Standard: EX120-SDN1 Dust-protected: No part no.	○
R1	OMRON Corp.: CompoBus/S (16 outputs)	Standard: EX120-SCS1 Dust-protected: EX120-SCS1-XP	○
R2	OMRON Corp.: CompoBus/S (8 outputs)	Standard: EX120-SCS2 Dust-protected: EX120-SCS2-XP	○
V	CC-LINK	Standard: EX120-SMJ1 Dust-protected: EX120-SMJ1-XP	○

SI Unit Part No. (With option W)

Symbol	Protocol	SI unit part no.	CE compliant
Q	DeviceNet™ System	EX124D-SDN1	○
R1	OMRON Corp.: CompoBus/S (16 outputs)	EX124D-SCS1	○
R2	OMRON Corp.: CompoBus/S (8 outputs)	EX124D-SCS2	○
V	CC-LINK	EX124D-SMJ1	○

Refer to Best Pneumatics No. ① for details on the EX120/124 integrated-type (Output) serial transmission system.

chanhvinh.com

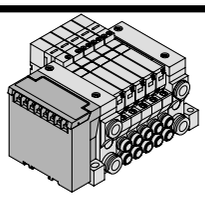

VV5Q11

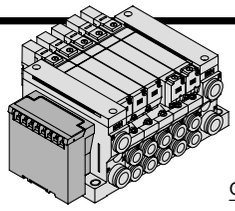

VV5Q21

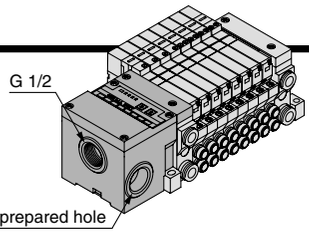

VV5Q11
Dust-protected (**-XP**)

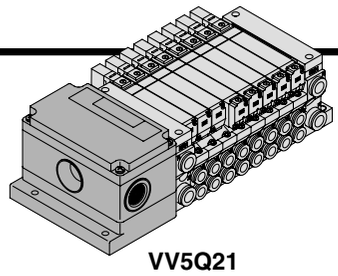

VV5Q21
Dust-tight, Water-jet-proof (**-W**)

How to Order Valves

VQ 1 1 0 0 ☐ – 5 ☐ ☐ 1 – Q

Series

1	VQ1000
2	VQ2000

Type of actuation

1	2-position single
2	2-position double
3	3-position closed centre
4	3-position exhaust centre
5	3-position pressure centre
A	4-position dual port (N.C. +N.C.)
B	4-position dual port (N.O. +N.O.)
C	4-position dual port (N.C. +N.O.)

Seal

0	Metal seal
1	Rubber seal

Function

Symbol	Specifications
—	Standard
B	High-speed response type
K Note 1)	High-pressure type (1.0 MPa)
N Note 2)	Negative common
R Note 2	External pilot

Note 1) Metal seal only
Note 2) For external pilot and negative common specifications, refer to "Semi-standard" on pages 56 to 57.
Note 4) When two or more symbols are specified, indicate them alphabetically. Combination of [B] and [K] is not possible.

Coil voltage

5	24 VDC; With indicator light/ surge voltage suppressor

Manual override

—	Non-locking push type (Tool required)
B	Locking type (Tool required)
C	Locking type (Manual)
D	Slide locking type (Manual)

Enclosure

—	Dust-protected
W Note)	Dust-tight, Water-jet-proof (IP65)

Note) VQ2000 only

CE compliant

Q	CE compliant

How to Order Manifold Assembly

Specify the part numbers for valves and options together beneath the manifold base part number.

<Example>

VV5Q11-08C6SV-Q ··1 set–Manifold base part no.
∗VQ1100-51-Q ·····2 sets–Valve part no. (Stations 1 to 2)
∗VQ1200-51-Q ·····4 sets–Valve part no. (Stations 3 to 6)
∗VQ1300-51-Q ·····1 set–Valve part no. (Station 7)
∗VVQ1000-10A-1···1 set–Blanking plate part no. (Station 8)

Prefix the asterisk to the part nos. of the solenoid valve, etc.

Write sequentially from the 1st station on the D-side. When part nos. written collectively are complicated, specify them by means of the manifold specification sheet.

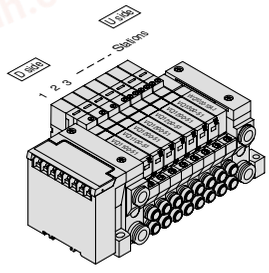

chanhvinh.com

S Series VQ1000/2000

kit (Serial transmission): For EX120 Integrated-type (Output) serial transmission system

VV5Q11

The dashed lines indicate DIN rail mounting [-D] (with DIN rail mounting bracket).

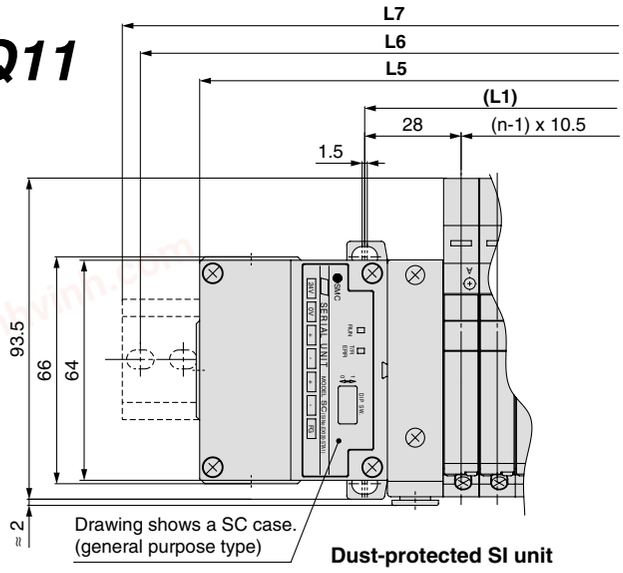

Dust-protected SI unit

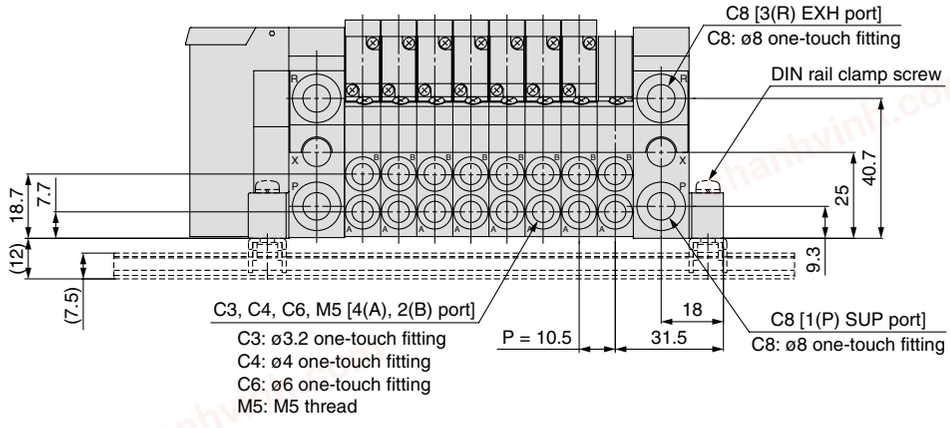

D side Stations -- 1 -- 2 -- 3 -- 4 -- 5 -- 6 -- 7 -- 8 --- n U side

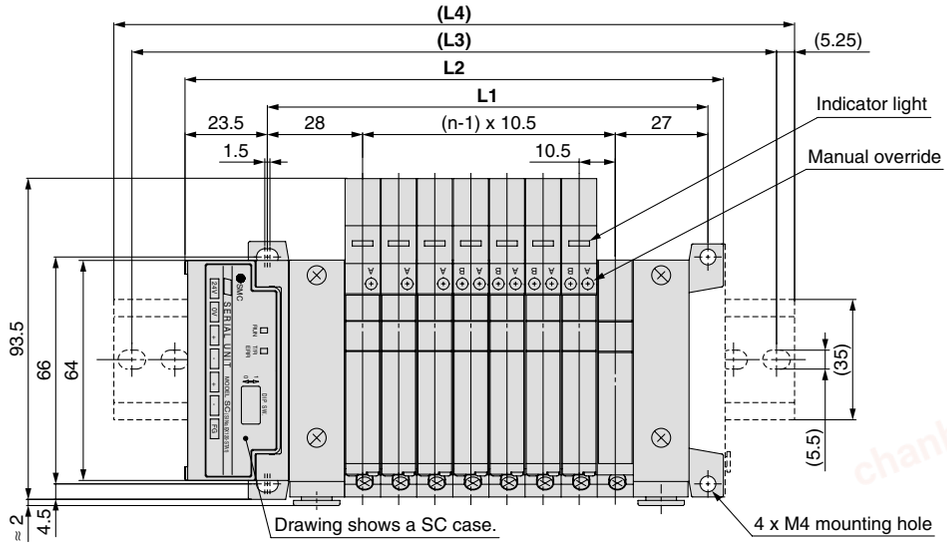

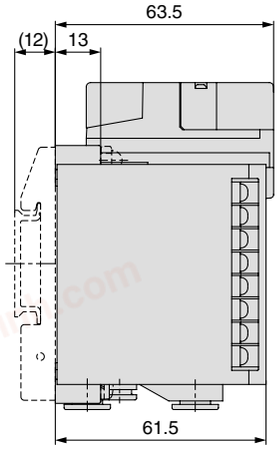

With ejector unit: Formula
L1 = 10.5n + 28.7 + (Number of ejector units x 26.7)
L2 = 10.5n + 56.3 + (Number of ejector units x 26.7)
L4 is L2 plus about 30.

Dust-protected SI unit: L5 = 10.5n + 97, L6 = L3 + 25, L7 = L4 + 25
Formula L1 = 10.5n + 44.5, L2 = 10.5n + 72.5 n: Station (Maximum 16 stations)

Dimensions

L \ n	2	3	4	5	6	7	8	9	10	11	12	13	14	15	16
L1	65.5	76	86.5	97	107.5	118	128.5	139	149.5	160	170.5	181	191.5	202	212.5
L2	93.5	104	114.5	125	135.5	146	156.5	167	177.5	188	198.5	209	219.5	230	240.5
(L3)	125	125	137.5	150	162.5	175	187.5	187.5	200	212.5	225	237.5	250	250	262.5
(L4)	135.5	135.5	148	160.5	173	185.5	198	198	210.5	223	235.5	248	260.5	260.5	273

chanhvinh.com

The dashed lines indicate DIN rail mounting [-D] (with DIN rail mounting bracket).

VV5Q21

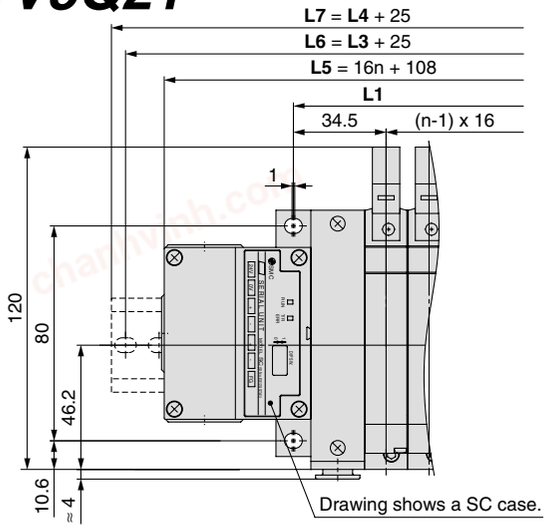

Dust-protected SI unit

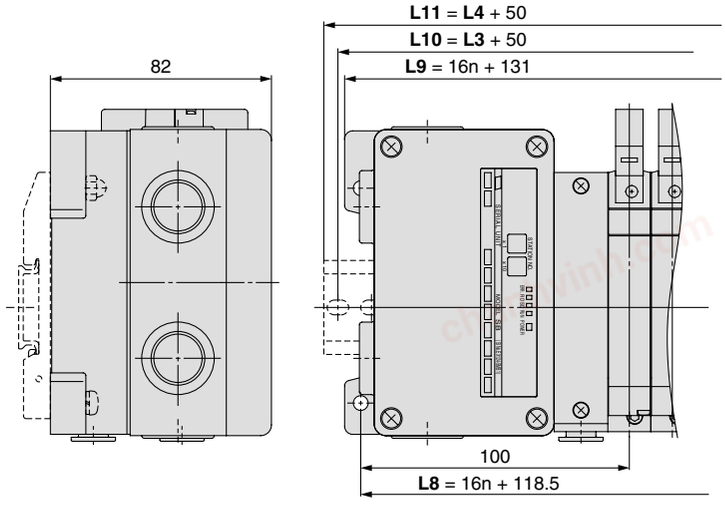

Dust-tight, Water-jet-proof (IP65) SI unit
(EX124 Integrated-type (output) serial transmission system)

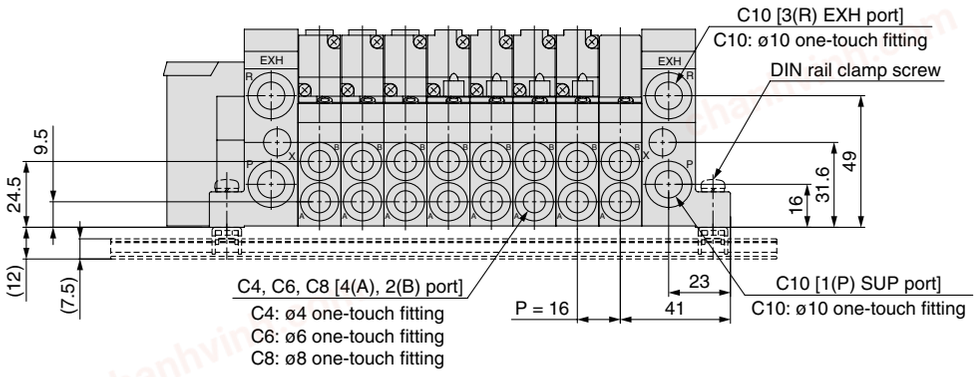

D side Stations -- 1 -- 2 -- 3 -- 4 -- 5 -- 6 -- 7 -- 8 -- n U side

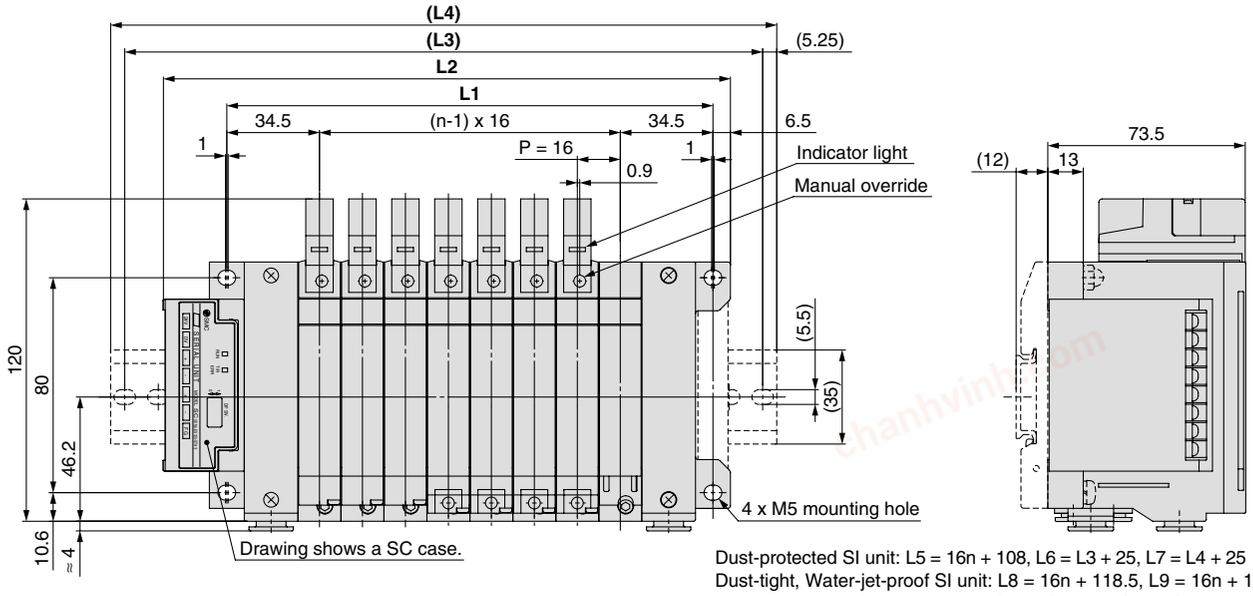

Dust-protected SI unit: L5 = 16n + 108, L6 = L3 + 25, L7 = L4 + 25
Dust-tight, Water-jet-proof SI unit: L8 = 16n + 118.5, L9 = 16n + 131
L10 = L3 + 50, L11 = L4 + 50

Dimensions

Formula L1 = 16n + 53, L2 = 16n + 83 n: Station (Maximum 16 stations)

L \ n	2	3	4	5	6	7	8	9	10	11	12	13	14	15	16
L1	85	101	117	133	149	165	181	197	213	229	245	261	277	293	309
L2	115	131	147	163	179	195	211	227	243	259	275	291	307	323	339
(L3)	137.5	162.5	175	187.5	200	225	237.5	250	262.5	287.5	300	312.5	337.5	350	362.5
(L4)	148	173	185.5	198	210.5	235.5	248	260.5	273	298	310.5	323	348	360.5	373

chanhvinh.com

S Series VQ2000

kit (Serial transmission): For EX240 Integrated-type (I/O) serial transmission system IP65 compliant

VQ2000 only

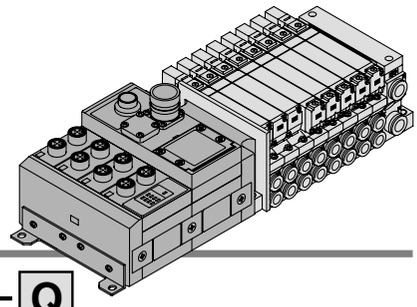

- **The serial transmission system reduces wiring work, while minimizing wiring and saving space.**

How to Order Manifold

VV5Q21 – 08 C6 S D QW 1 ☐ – N W – Q

VQ2000 Plug-in series

Stations

01	1 station
⋮	⋮
16	16 stations

Cylinder port

Symbol	Port size
C4	With ø4 one-touch fitting
C6	With ø6 one-touch fitting
C8	With ø8 one-touch fitting
CM Note 3)	Mixed sizes and with port plug
MM Note 4)	Mixed size for different types of piping, option installed

SI unit mounting
D: D side mounting

Note 1) Insert "L" (Top ported) or "B" (Bottom ported) for elbow type.
Example) B6 (Bottom ported elbow with ø6 one-touch fitting)
Note 2) Indicate "LM" for models with elbow fittings and mixed cylinder port sizes.
Note 3) Indicate "Mixed sizes and with port plug" by means of the manifold specification sheet.
Note 4) When selecting the mixed size for different types of piping, dual flow fitting assembly, or double check block (direct mounting), enter "MM" and give instructions in the manifold specification sheet.
Note 5) Inch-size one-touch fittings are available. Refer to "Semi-standard" on page 57 for details.

Refer to Best Pneumatics No. ① for details on the EX240 integrated-type (Output) serial transmission system.

Model

0W	Without SI unit	
QW	DeviceNet™	+COM.
NWN	PROFIBUS-DP	–COM.

Note) Only +COM is available for DeviceNet™. Order a mounting valve with +COM. Since PROFIBUS is –COM only, order –COM for valves to be mounted.

Number of DI unit

—	Without SI unit or DI unit
0	DI unit: None
1	DI unit: 1 pc.
2	DI unit: 2 pcs.
3	DI unit: 3 pcs.
4	DI unit: 4 pcs.

DI unit specifications

—	PNP sensor input (+COM) or without SI/DI unit
N	NPN sensor input (–COM)

Option

Symbol	Option
—	None
B	With back pressure check valve
K	Special wiring spec. (Except double wiring)
N	With name plate
R	External pilot

Note) When two or more symbols are specified, indicate them alphabetically.
Example: -BNR

Enclosure
IP65 (Dust-tight, Water-jet-proof)

CE compliant

Q	CE compliant

How to Order Manifold

VQ 2 1 0 0 ☐ – 5 ☐ W 1 – Q

Type of actuation

1	2-position single
2	2-position double
3	3-position closed centre
4	3-position exhaust centre
5	3-position pressure centre
A	4-position dual port (N.C. +N.C.)
B	4-position dual port (N.O. +N.O.)
C	4-position dual port (N.C. +N.O.)

Seal

0	Metal seal
1	Rubber seal

Function

Symbol	Specifications
—	Standard
B	High-speed response type
K Note 1)	High-pressure type (1.0 MPa)
N Note 2)	Negative common
R Note 2)	External pilot

Note) For external pilot and negative common specifications, refer to "Semi-standard" on pages 56 to 57.

Manual override

—	Non-locking push type (Tool required)
B	Locking type (Tool required)
C	Locking type (Manual)
D	Slide locking type (Manual)

Coil voltage

5	24 VDC; With indicator light/surge voltage suppressor

Note 1) Metal seal only
Note 2) For external pilot and negative common specifications, refer to "Semi-standard" on pages 56 to 57.
Note 3) When a valve is compatible with PROFIBUS DP, the SI unit is negative common. Select valves for negative common.
Note 4) When two or more symbols are specified, indicate them alphabetically. Combination of [B] and [K] is not possible.

Enclosure
IP65 (Dust-tight, Water-jet-proof)

CE compliant

Q	CE compliant

⚠Caution
Use the standard specification when continuously energizing for long periods of time.

chanhvinh.com

VV5Q21

(Serial transmission kit: EX240)

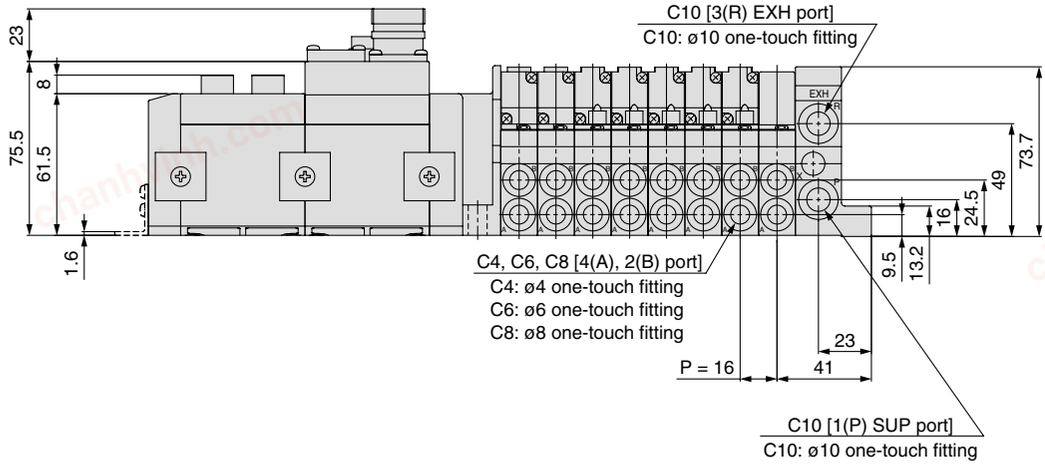

D side Stations ---- 1 -- 2 -- 3 -- 4 -- 5 -- 6 -- 7 -- 8 -- n U side

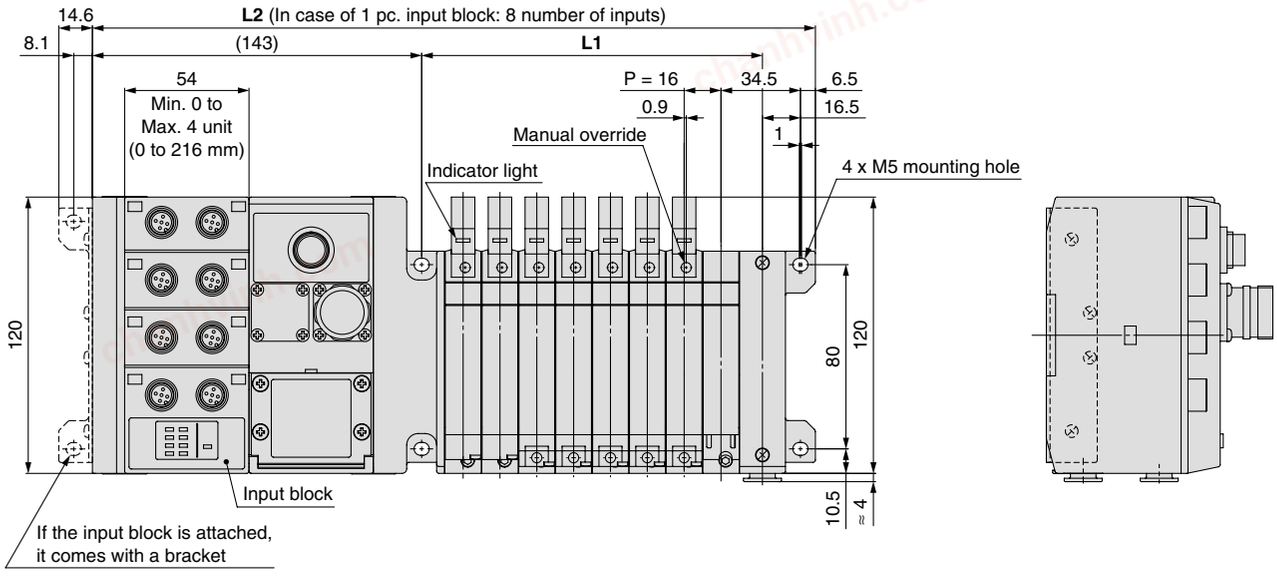

Formula L1 = 16n + 36.5 L2 = 16n + 186 (In case of 1 pc. DI unit, 54 mm will be added for increasing every 1 pc.)
n: Station (Maximum 24 stations)

Dimensions

L \ n	2	3	4	5	6	7	8	9	10	11	12	13	14	15	16	17	18	19	20	21	22	23	24
L1	68.5	84.5	100.5	116.5	132.5	148.5	164.5	180.5	196.5	212.5	228.5	244.5	260.5	276.5	292.5	308.5	324.5	340.5	356.5	372.5	388.5	404.5	420.5
L2	218	234	250	266	282	298	314	330	346	362	378	394	410	426	442	458	474	490	506	522	538	554	570

chanhvinh.com

M Series VQ2000
kit (Circular connector)

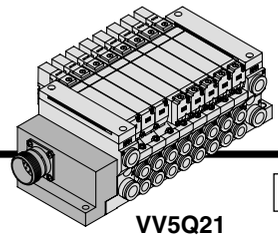

VV5Q21

VQ2000 only

- **MIL flat cable connector reduces installation labour for electrical connection.**
- **Manifold and connectors, both compliant with the IP65 rating (Dust-tight, Water-jet-proof), provide a high-degree of protection for the electrical parts.**
- **Maximum stations are 24.**

Manifold Specifications

Series	Piping specifications			Applicable stations
	Piping direction	Port size		
		1(P), 3(R)	4(A), 2(B)	
VQ2000	Side	C10	C4, C6, M8	Max. 24 stations

Circular Connector (26 Pins)

Cable Assembly ●

AXT100-MC26- 015 / 030 / 050

(Circular connector cable assembly included in a specific manifold model no. Refer to "How to Order Manifold.")

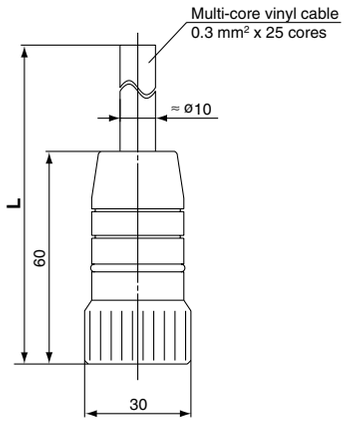

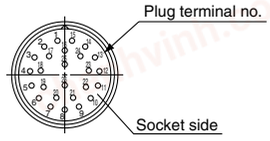

Circular connector cable assembly

Cable length (L)	Assembly part no.	Note
1.5 m	AXT100-MC26-015	Cable 25-core x 24AWG
3 m	AXT100-MC26-030	
5 m	AXT100-MC26-050	

Note) Cannot be used for transfer wiring.

Electrical characteristics

Item	Property
Conductor resistance Ω/km, 20°C	65 or less
Voltage limit V, 1 min, AC	1000
Insulation resistance MΩ/km, 20°C	5 or more

Note) The minimum bending radius of the circular connector cable is 20 mm.

Circular connector cable assembly terminal no.

Terminal no.	Lead wire colour	Dot marking
1	Black	None
2	Brown	None
3	Red	None
4	Orange	None
5	Yellow	None
6	Pink	None
7	Blue	None
8	Purple	White
9	Grey	Black
10	White	Black
11	White	Red
12	Yellow	Red
13	Orange	Red
14	Yellow	Black
15	Pink	Black
16	Blue	White
17	Purple	None
18	Grey	None
19	Orange	Black
20	Red	White
21	Brown	White
22	Pink	Red
23	Grey	Red
24	Black	White
25	White	None
26	White	None

Note) Lengths other than the above are also available. Please contact SMC for details.

How to Order Manifold

VV5Q 2 1 – 08 C6 M 1 – N W – Q

Series

2	VQ2000

Manifold

1	Plug-in unit

Stations

02	2 stations
⋮	⋮
24	24 stations

Note) Refer to page 56 for details.

Cylinder port

Symbol	Port size
C4	With ø4 one-touch fitting
C6	With ø6 one-touch fitting
C8	With ø8 one-touch fitting
CM Note 3)	Mixed sizes and with port plug
MM Note 4)	Mixed size for different types of piping, option installed

Note 1) Insert "L" (Top ported) or "B" (Bottom ported) for elbow type. Example) B6 (Bottom ported elbow with ø6 one-touch fitting)
Note 2) Indicate "LM" for models with elbow fittings and mixed cylinder port sizes.
Note 3) Indicate "Mixed sizes and with port plug" by means of the manifold specification sheet.
Note 4) When selecting the mixed size for different types of piping, dual flow fitting assembly, or double check block (direct mounting), enter "MM" and give instructions in the manifold specification sheet.
Note 5) Inch-size one-touch fittings are available. Refer to "Semi-standard" on page 57 for details.

Cable (Length)

0	Without cable
1	With cable (1.5 m)
2	With cable (3 m)
3	With cable (5 m)

Enclosure
IP65 (Dust-tight, Water-jet-proof)

Option

Symbol	Option
—	None
B Note 2)	With back pressure check valve
D	DIN rail mounting
D0	With DIN rail bracket (Without DIN rail)
D□ Note 3)	DIN rail mounting (□: Stations 02 to 24)
K Note 4)	Special wiring spec. (Except double wiring)
N	With name plate
R Note 5)	External pilot

Note 1) When two or more symbols are specified, indicate them alphabetically. Example) -BKR
Note 2) Models with a suffix "-B" have check valves for prevention of back pressure at all manifold stations. When a back pressure check valve is desired, and is to be installed only in certain manifold stations, specify the mounting position by means of the manifold specification sheet.
Note 3) The number of stations that may be displayed is longer than the manifold number of stations.
Note 4) Specify the wiring specifications by means of the manifold specification sheet.
Note 5) Indicate "R" for the valve with external pilot.

CE compliant

—	—
Q	CE compliant

Note) DC specification only

chanhvinh.com

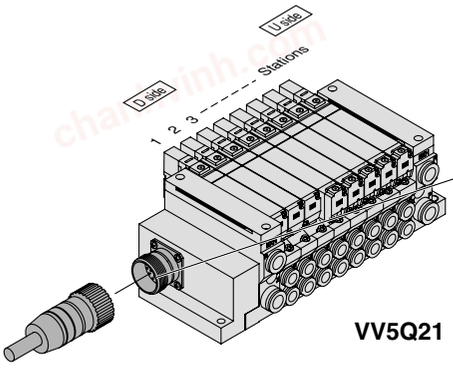

VV5Q21

The total number of stations is tabulated starting from station one on the D-side.

Electrical Wiring Specifications

Circular connector cable assembly
AXT100-MC26- **015** / **030** / **050** **Wire colour**

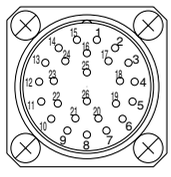

		Terminal no.	Polarity		Lead wire colour	Dot marking
Station 1	SOL.A	1	(–)	(+)	Black	None
	SOL.B	2	(–)	(+)	Brown	None
Station 2	SOL.A	3	(–)	(+)	Red	None
	SOL.B	4	(–)	(+)	Orange	None
Station 3	SOL.A	5	(–)	(+)	Yellow	None
	SOL.B	6	(–)	(+)	Pink	None
Station 4	SOL.A	7	(–)	(+)	Blue	None
	SOL.B	8	(–)	(+)	Purple	White
Station 5	SOL.A	9	(–)	(+)	Grey	Black
	SOL.B	10	(–)	(+)	White	Black
Station 6	SOL.A	11	(–)	(+)	White	Red
	SOL.B	12	(–)	(+)	Yellow	Red
Station 7	SOL.A	13	(–)	(+)	Orange	Red
	SOL.B	14	(–)	(+)	Yellow	Black
Station 8	SOL.A	15	(–)	(+)	Pink	Black
	SOL.B	16	(–)	(+)	Blue	White
Station 9	SOL.A	17	(–)	(+)	Purple	None
	SOL.B	18	(–)	(+)	Grey	None
Station 10	SOL.A	19	(–)	(+)	Orange	Black
	SOL.B	20	(–)	(+)	Red	White
Station 11	SOL.A	21	(–)	(+)	Brown	White
	SOL.B	22	(–)	(+)	Pink	Red
Station 12	SOL.A	23	(–)	(+)	Grey	Red
	SOL.B	24	(–)	(+)	Black	White
(Max.)	COM.	25	(+)	Note) (–)	White	None
	COM.	26	(+)	(–)	White	None
			Positive COM spec.	**Negative COM spec.**		

As the standard electrical wiring specifications, double wiring (connected to SOL. A and SOL. B) is adopted for the internal wiring of each station for 12 stations or less, regardless of valve and option types. Mixed single and double wiring is available as semi-standard. Refer to page 56 for details.

Note) When using the negative common specifications, use valves for negative common. (Refer to page 56.)
Refer to "Semi-standard" on page 56 for details.

How to Order Valves

VQ 2 1 0 0 ☐ – 5 ☐ ☐ W 1 – Q

Series

2	VQ2000

Type of actuation

1	2-position single
2	2-position double
3	3-position closed centre
4	3-position exhaust centre
5	3-position pressure centre
A	4-position dual port (N.C. +N.C.)
B	4-position dual port (N.O. +N.O.)
C	4-position dual port (N.C. +N.O.)

Seal

0	Metal seal
1	Rubber seal

Function

Symbol	Specifications
—	Standard
B	High-speed response type
K Note 1)	High-pressure type (1.0 MPa)
N Note 2)	Negative common
R Note 2)	External pilot

Note 1) Metal seal only
Note 2) For external pilot and negative common specifications, refer to "Semi-standard" on pages 56 to 57.
Note 3) When two or more symbols are specified, indicate them alphabetically. Combination of [B] and [K] is not possible.

Light/surge voltage suppressor

—	Yes
E	None

Coil voltage

5	24 VDC
6	12 VDC

CE compliant
Note) DC specification only

Enclosure
IP65 (Dust-tight, Water-jet-proof)

Manual override

—	Non-locking push type (Tool required)
B	Locking type (Tool required)
C	Locking type (Manual)
D	Slide locking type (Manual)

⚠Caution
Use the standard specification when continuously energizing for long periods of time.

How to Order Manifold Assembly

Specify the part numbers for valves and options together beneath the manifold base part number.

<Example>
Circular connector kit with cable (3 m)
VV5Q21-09C6M2-W-Q ··· 1 set–Manifold base part no.
***VQ2100-51-Q ····· 3 sets–Valve part no. (Stations 1 to 3)**
***VQ2200-51-Q ····· 3 sets–Valve part no. (Stations 4 to 6)**
***VQ2300-51-Q ····· 2 sets–Valve part no. (Stations 7 to 8)**
***VVQ2000-10A-1 ··· 1 set–Blanking plate part no. (Station 9)**

Prefix the asterisk to the part nos. of the solenoid valve, etc.

Write sequentially from the 1st station on the D-side.
When part nos. written collectively are complicated, specify them by means of the manifold specification sheet.

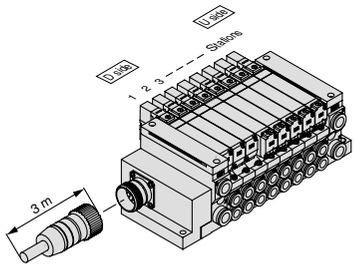

chanhvinh.com

VV5Q21

The dashed lines and dimensions in parentheses indicate DIN rail mounting [-D].

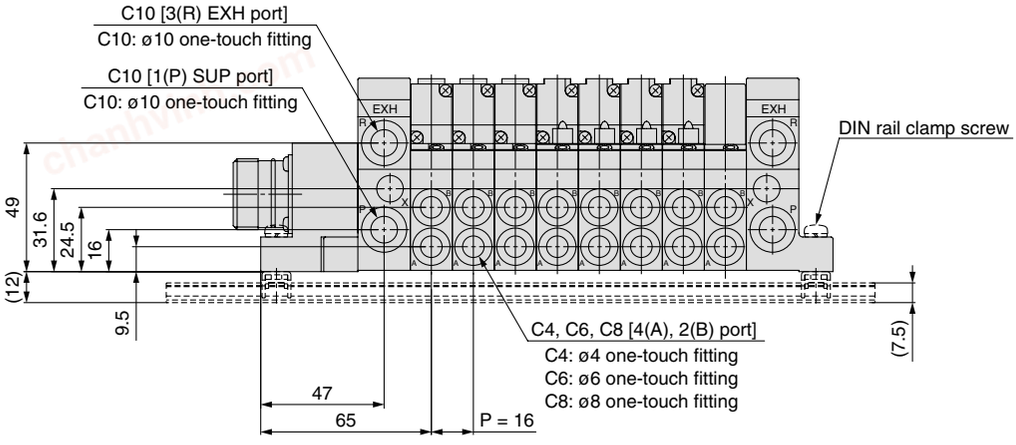

D side Stations -- 1 -- 2 -- 3 -- 4 -- 5 -- 6 -- 7 -- 8 -- n U side

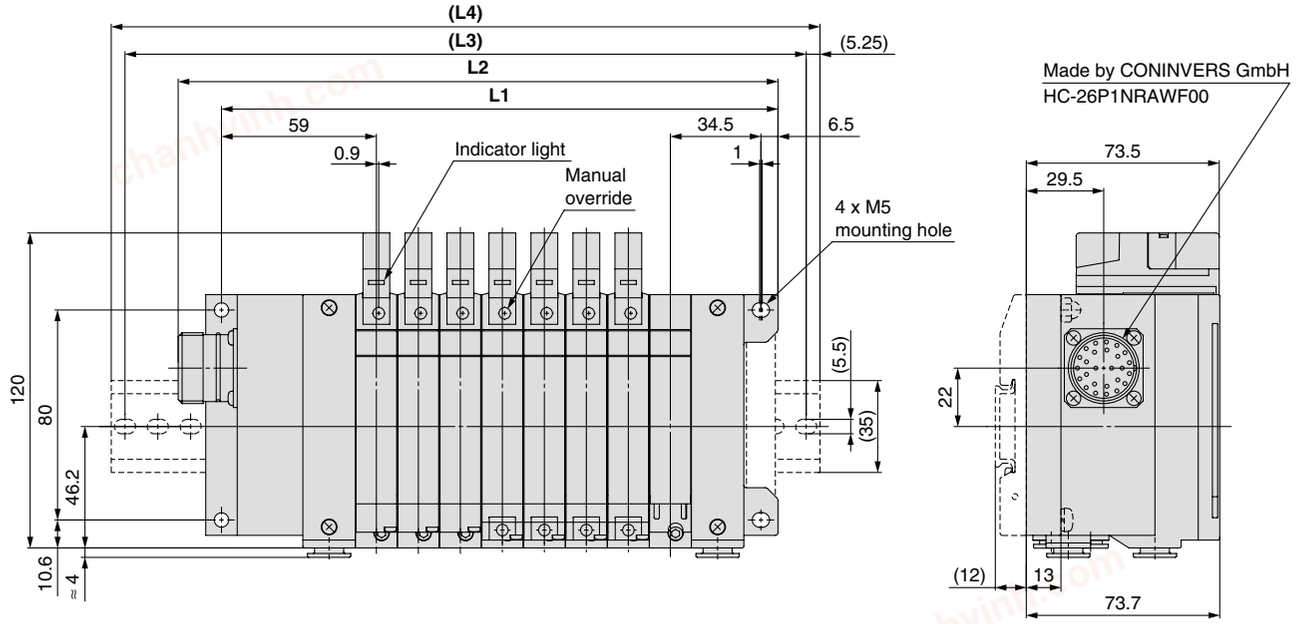

Dimensions

Formula L1 = 16n + 77.5, L2 = 16n + 100.5 n: Station (Maximum 12 stations)

L \ n	2	3	4	5	6	7	8	9	10	11	12
L1	109.5	125.5	141.5	157.5	173.5	189.5	205.5	221.5	237.5	253.5	269.5
L2	132.5	148.5	164.5	180.5	196.5	212.5	228.5	244.5	260.5	276.5	292.5
(L3)	162.5	175	187.5	200	225	237.5	250	275	287.5	300	312.5
(L4)	173	185.5	198	210.5	235.5	248	260.5	285.5	298	310.5	323

chanhvinh.com

Sub-plate Single Unit

VQ2000 Only

Series VQ2000

How to Order

IP65 enclosure in standard specifications

Easy-to-use terminal block

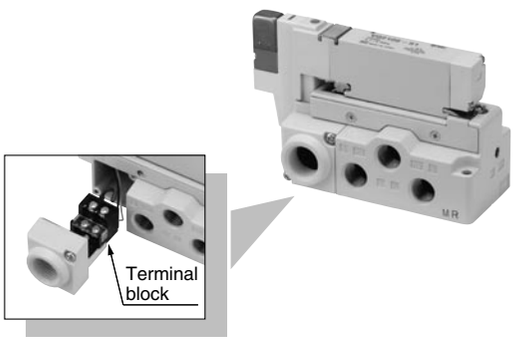

In the case of Valve + Sub-plate

VQ2 1 0 0 – 5 W 1 – 02 [ ] – Q

- Entry is the same as standard products.
- Enclosure

—	Dust-protected
W Note 1)	IP65 (Dust-tight, Water-jet-proof)

Note 1) Valves are IP65 specifications.

- Thread type

—	Rc
N	NPT
T	NPTF
F	G

- Port size

02	1/4

- CE compliant

Note) DC specification only

In the case of Sub-plate alone

VQ2000 – PW – 02

Dimensions

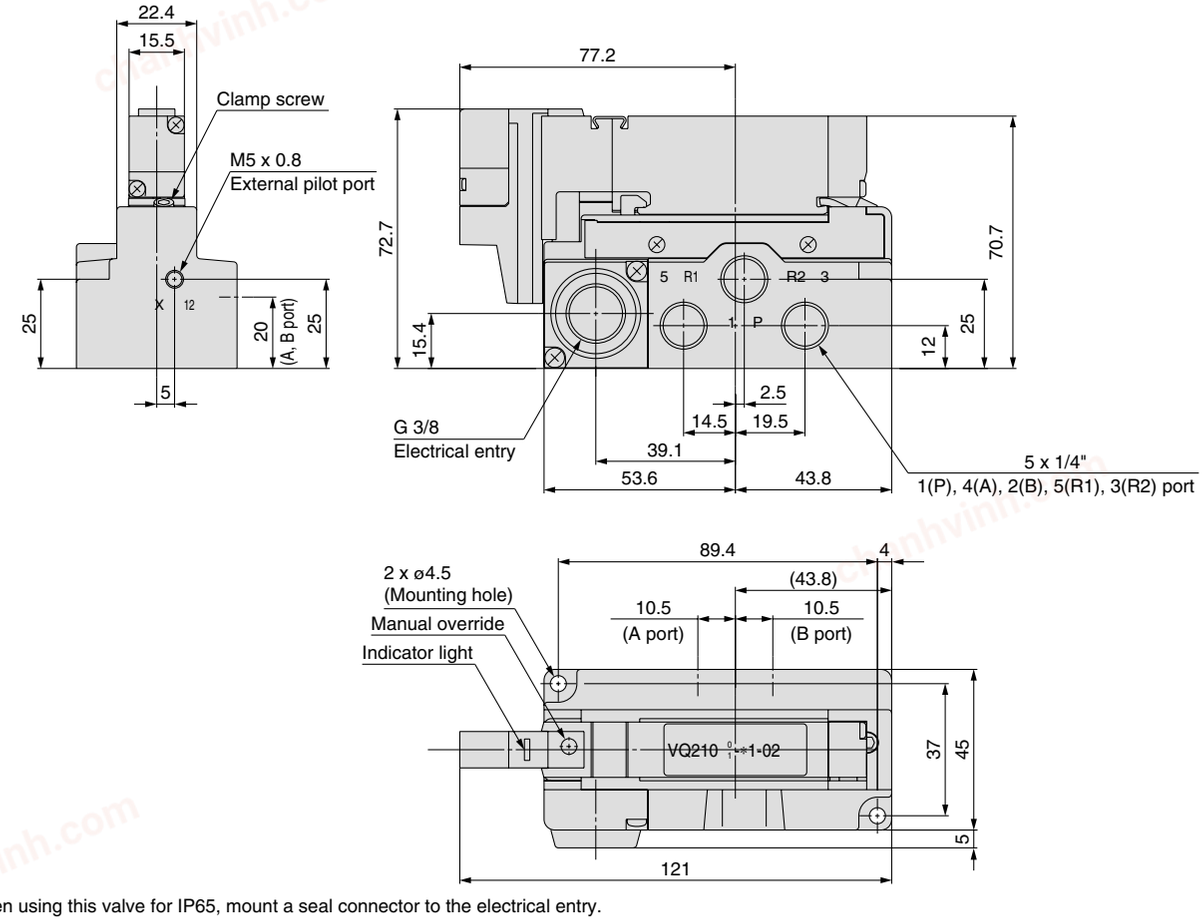

Note) When using this valve for IP65, mount a seal connector to the electrical entry.

chanhvinh.com

Series VQ1000/2000

Semi-standard

Different Number of Connector Pins

F and P kits with the following number of pins are available besides the standard number (F = 25P; P = 26P). Select the desired number of pins and cable length from the cable assembly list. Place an order for the cable assembly separately.

F kit (D-sub connector) 15 pins

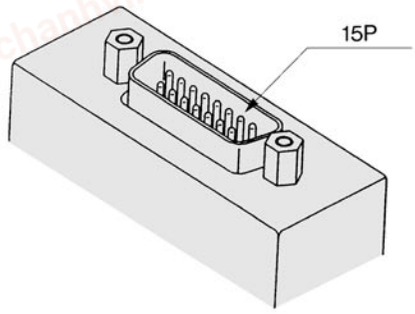

How to Order Manifold

VV5Q11– 06 C6 F SA – □ – Q

- 06: Stations
- C6: Cylinder port
- F SA: How to Order — D-sub connector, 15 pins, Connector location–Side, Without cable
- □: Option
- Q

Kit type/Electrical entry

Pins \ Location	Top entry		Side entry	
15P (Max. 7 stations)	**F** kit	**UA**	**F** kit	**SA**

Note) In the same way as the 25-pin models (standard), the terminal no. 1 is for SOL.A at the 1st station, the terminal no. 9 for SOL.B at the 1st station, and the terminal no. 8 for COM.

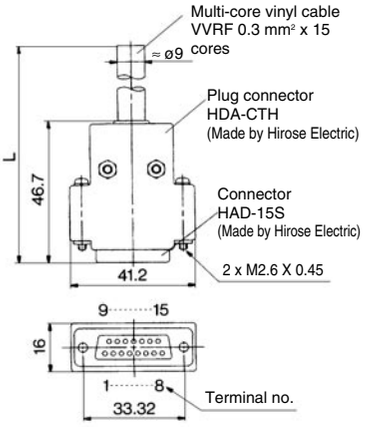

Wire Colour Table by Terminal No. of D-sub Connector Cable Assembly

Terminal no.	Lead wire colour	Dot marking
1	Black	None
2	Brown	None
3	Red	None
4	Orange	None
5	Yellow	None
6	Pink	None
7	Blue	None
8	Purple	White
9	Grey	Black
10	White	Black
11	White	Red
12	Yellow	Red
13	Orange	Red
14	Yellow	Black
15	Pink	Black

D-sub Connector Cable Assembly

Cable length (L) \ Pins	15P
1.5 m	AXT100-DS15-1
3 m	AXT100-DS15-2
5 m	AXT100-DS15-3

Note) For other commercial connectors, use a type conforming to MIL-C-24308.

P kit (Flat ribbon cable) 10/16/20 pins

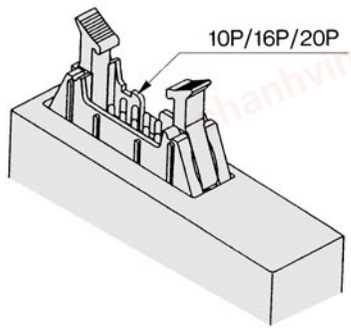

How to Order Manifold

VV5Q11– 06 C6 P SC – □ – Q

- 06: Stations
- C6: Cylinder port
- P SC: How to Order — Flat ribbon cable, 20 pins, Connector location–Side, Without cable
- □: Option
- Q

Kit type/Electrical entry

Pins \ Location	Top entry		Side entry	
10P (Max. 4 stations)	**P** kit	**UA**	**P** kit	**SA**
16P (Max. 7 stations)		**UB**		**SB**
20P (Max. 9 stations)		**UC**		**SC**

Note) In the same way as the 26-pin models (standard), the terminal no. 1 is for SOL.A at the 1st station, the terminal no. 2 for SOL.B at the 1st station, and two pins from the max. terminal numbers are for COM.

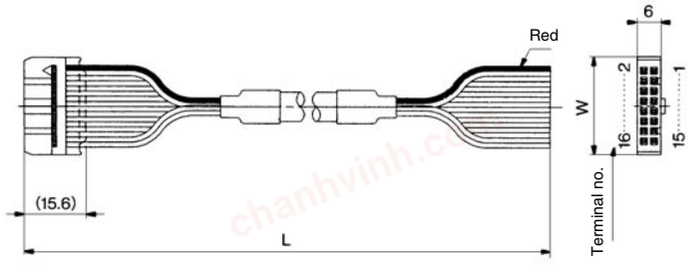

Flat Ribbon Cable Assembly

Cable length (L) \ Pins	10P	16P	20P
1.5 m	AXT100-FC10-1	AXT100-FC16-1	AXT100-FC20-1
3 m	AXT100-FC10-2	AXT100-FC16-2	AXT100-FC20-2
5 m	AXT100-FC10-3	AXT100-FC16-3	AXT100-FC20-3
Connector width (**W**)	17.2	24.8	30

Note) For other commercial connectors, use a type with strain relief conforming to MIL-C-83503.

chanhvinh.com

Special Wiring Specifications

In the internal wiring of F/P/J/G/T/S kit, double wiring (connected to SOL. A and SOL. B) is adopted for each station regardless of the valve and option types. Mixed single and double wiring is available as an option.

1. How to Order

Indicate an option symbol "-K", for the manifold no. and be sure to specify the mounting position and number of stations of the single and double wiring by means of the manifold specification sheet.

Example) **VV5Q11−08C6FU1−D K S−Q**

Others, option symbols: to be indicated alphabetically.

2. Wiring specifications

With the A side solenoid of the 1st station as no.1 (meaning, to be connected to no.1 terminal), without making any terminals vacant.

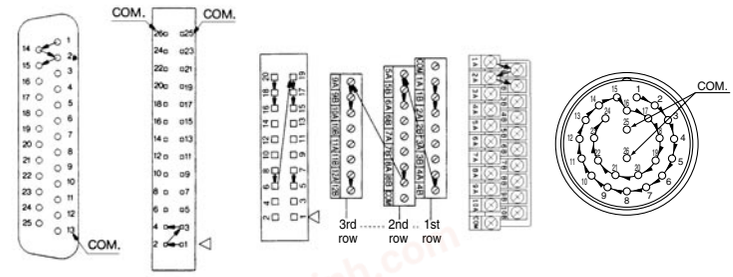

F kit D-sub connector (25P) | **P kit** Flat ribbon cable connector (26P) | **J/G kit** | **T kit** Terminal block (VQ1000, 24 terminals) | **T kit** Terminal block (VQ2000) | **M kit**

3. Max. number of stations

The maximum number of stations depends upon the number of solenoids. Assuming one for a single and two for a double, determine the number of stations so that the total number is not more than the max. number given in the following table.

Kit	F kit (D-sub connector)		P kit (Flat ribbon cable)				J kit (Flat ribbon cable)	G kit (Flat ribbon cable with terminal block)
Type	FUS□ 25P	FUSA 15P	PUS□ 26P	PUSC 20P	PUSB 16P	PUSA 10P	JUS□ 20P	G□
Max. points	24	14	24	18	14	8	16	16

Kit		T kit (Terminal block box)		S kit (Serial transmission)	M kit (Circular connector)
Type	VQ1000	2 rows of terminal blocks	3 rows of terminal blocks	S□	M□
		16	24		
Max. points	VQ2000	20		16	24

Negative Common Specifications

Specify the valve model no. as shown below for negative common specification.
The manifold no. shown below is for the T (VQ1000) and L (VQ1000/2000) kits. For other kits the standard manifold can be used. However, negative common is not compatible with S (except EX510 gateway-type and EX240 integrated-type) and G kits.

How to Order Valves

VQ1100 N −51− Q

Negative common specifications

How to Order Manifold

T kit (VQ1000):

VV5Q11− 06 C6 T N − □ − Q

- **Option**
- **Negative common specifications**
- **Cylinder port**
- **Stations**

L kit (VQ1000/2000):

VV5Q11− 06 C6 L N 1 − □ − Q

- **Stations**
- **Cylinder port**
- **Negative common specifications**
- **Electrical entry / Cable length**

0	With cable (0.6 m)
1	With cable (1.5 m)
2	With cable (3 m)

- **Option**

chanhvinh.com

Series VQ1000/2000

Semi-standard

External Pilot Specifications

When the supply air pressure is lower than the required minimum operating pressure (0.1 to 0.2 MPa) for the solenoid valve (or when the valve is used for vacuum), specify an external pilot model. Order a manifold or valve by suffixing the external pilot specification, "R". The X-port of the manifold base is equipped with one-touch fittings for external pilot.
VQ1000: C4 (ø4 one-touch fitting)
VQ2000: C6 (ø6 one-touch fitting)

How to Order Manifold

VV5Q11−08C6FU1−R S−Q

- **R**: External pilot specifications
- **S**: Others, option symbols: to be indicated alphabetically.

How to Order Valves

VQ1100 R − 51−Q

- **R**: External pilot specifications

Note 1) When two or more functions are specified, indicate them alphabetically.
Note 2) Since the pilot EXH of this valve is released from the R1 passage, it is not possible to vacuum from a part other than EXH pressure and SUP ports.

Inch-size One-touch Fittings

The valve with inch-size one-touch fittings is shown below.

VV5Q11− 06 N7 PS0 − □ −Q

- **06**: Stations
- **N7**: Cylinder port
- **PS0**: Kit type/Electrical entry
- **□**: Option

Symbol		N1	N3	N7	N9	M5T	NM
Applicable tubing O.D. (Inch)		ø1/8"	ø5/32"	ø1/4"	ø5/16"	10-32UNF (M5 thread)	Mixed
4(A), 2(B) port	VQ1000	●	●	●	—	●	●
	VQ2000	—	●	●	●	—	●

Note) When inch-size fittings are selected for the cylinder port, inch-size fittings are selected on 1(P), 3(R) port, too.

1(P), 3(R) port size
VQ1000 ····· ø5/16" (N9)
VQ2000 ····· ø3/8" (N11)

DIN Rail Mounting

Each manifold can be mounted on a DIN rail. Order it by indicating a DIN rail mounting option symbol, "-D". In this case, a DIN rail which is approx. 30 mm longer than the manifold with the specified number of stations is attached.

● **When DIN rail is unnecessary**
(DIN rail mounting brackets only are attached.)
Indicate the option symbol, -D0, for the manifold part number.

Example)

VV5Q11−08C6FU1−D0S−Q

- **S**: Others, option symbols: to be indicated alphabetically.

● **When using DIN rail longer than the manifold with specified number of stations**
Clearly indicate the necessary number of stations next to the option symbol "-D" for the manifold part number.

Example)

VV5Q11−08C6FU1−D09S−Q

- **09**: DIN rail for 9 stations
- **S**: Others, option symbols: to be indicated alphabetically.

Note) The number of stations that may be displayed is longer than the manifold number of stations.

● **When changing to a DIN rail mounting.**
Order brackets for mounting a DIN rail. (Refer to "Manifold Optional Parts" on pages 67 and 71.)

No. VVQ1000-57A (For VQ1000)
VVQ2000-57A (For VQ2000)
2 pcs. per one set.

● **When ordering DIN rail only**
DIN rail no.: AXT100-DR-□

Note) As for □, specify the number from the DIN rail table. Refer to the dimensions of each kit for L dimension.

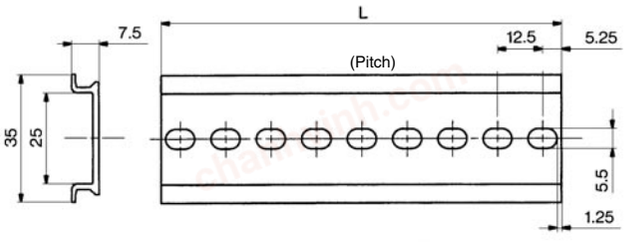

L Dimension

L = 12.5 x n + 10.5

No.	1	2	3	4	5	6	7	8	9	10
L dimension	23	35.5	48	60.5	73	85.5	98	110.5	123	135.5
No.	11	12	13	14	15	16	17	18	19	20
L dimension	148	160.5	173	185.5	198	210.5	223	235.5	248	260.5
No.	21	22	23	24	25	26	27	28	29	30
L dimension	273	285.5	298	310.5	323	335.5	348	360.5	373	385.5
No.	31	32	33	34	35	36	37	38	39	40
L dimension	398	410.5	423	435.5	448	460.5	473	485.5	498	510.5

chanhvinh.com

chanhvinh.com
chanhvinh.com
chanhvinh.com
chanhvinh.com
chanhvinh.com
chanhvinh.com

chanhvinh.com

Series VQ1000/2000
Construction

VQ1000 Plug-in Unit: Main Parts/Replacement Parts

Metal seal

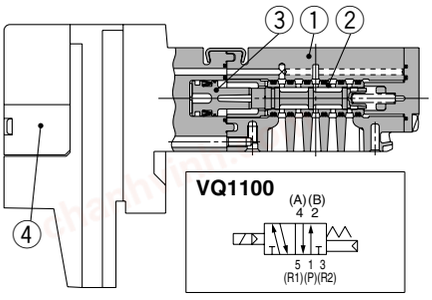

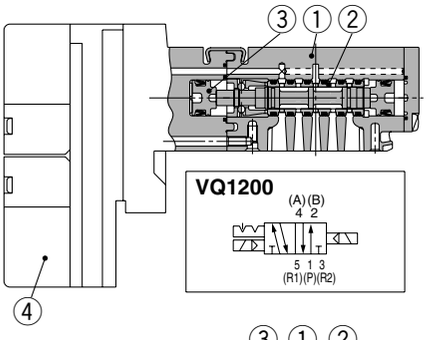

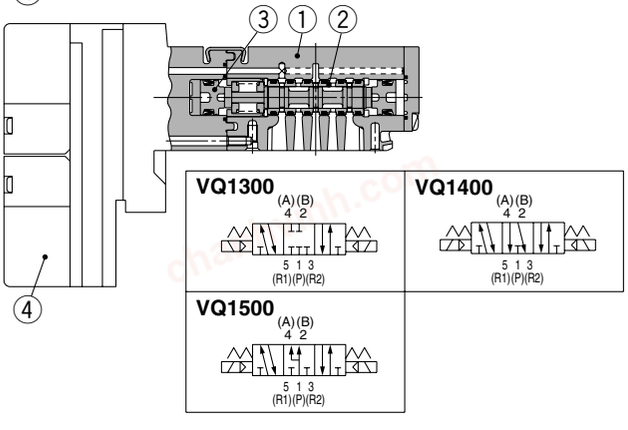

Rubber seal

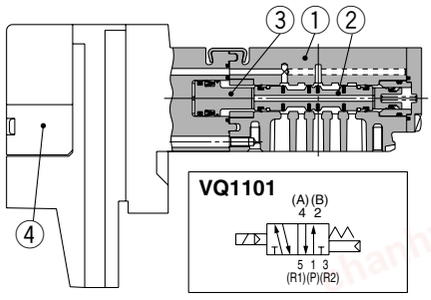

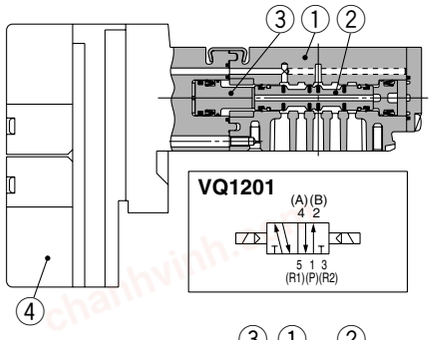

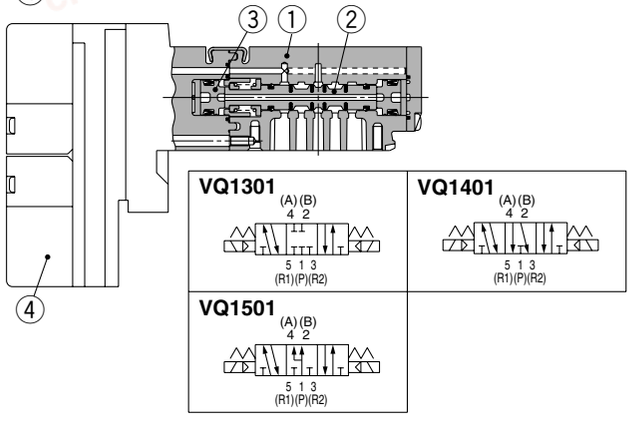

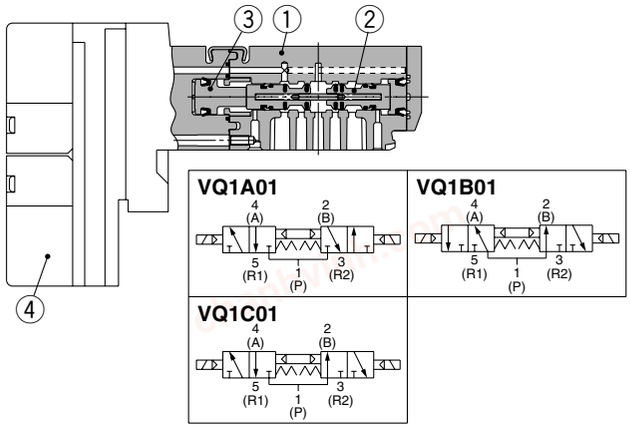

Component Parts

No.	Description	Material	Note
1	**Body**	Zinc die-casted	
2	**Spool/Sleeve**	Stainless steel	
3	**Piston**	Resin	
4	**Pilot valve assembly**	—	

Note) Refer to page 62 for “How to Order Pilot Valve Assembly”.

Component Parts

No.	Description	Material	Note
1	**Body**	Zinc die-casted	
2	**Spool valve**	Aluminum, HNBR	
3	**Piston**	Resin	
4	**Pilot valve assembly**	—	

Note) Refer to page 62 for “How to Order Pilot Valve Assembly”.

chanhvinh.com

VQ2000 Plug-in Unit: Main Parts/Replacement Parts

Metal seal

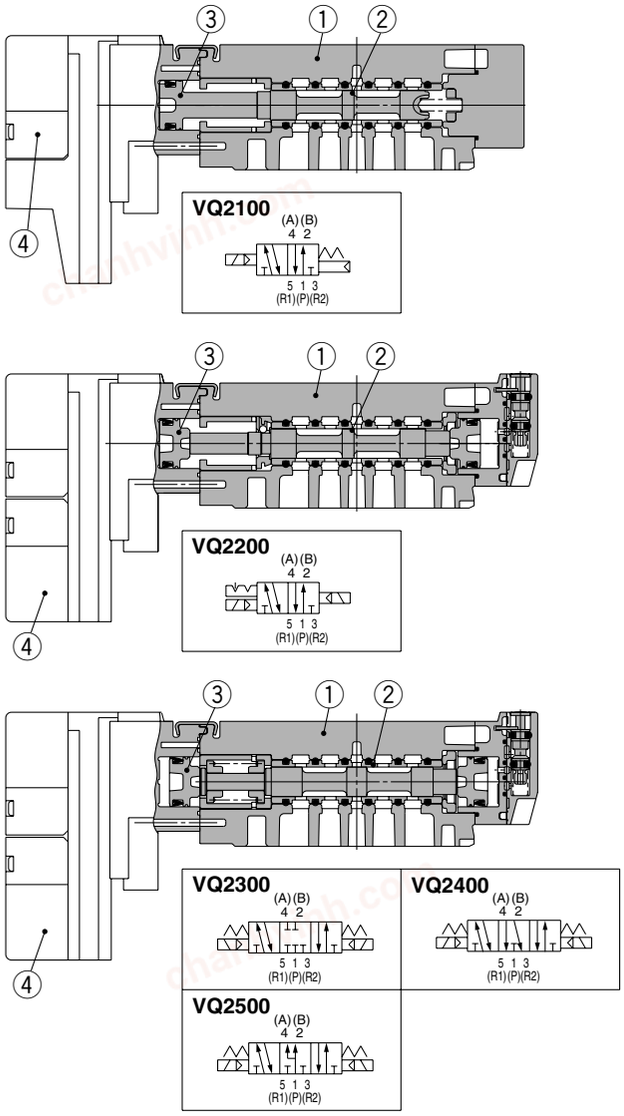

Rubber seal

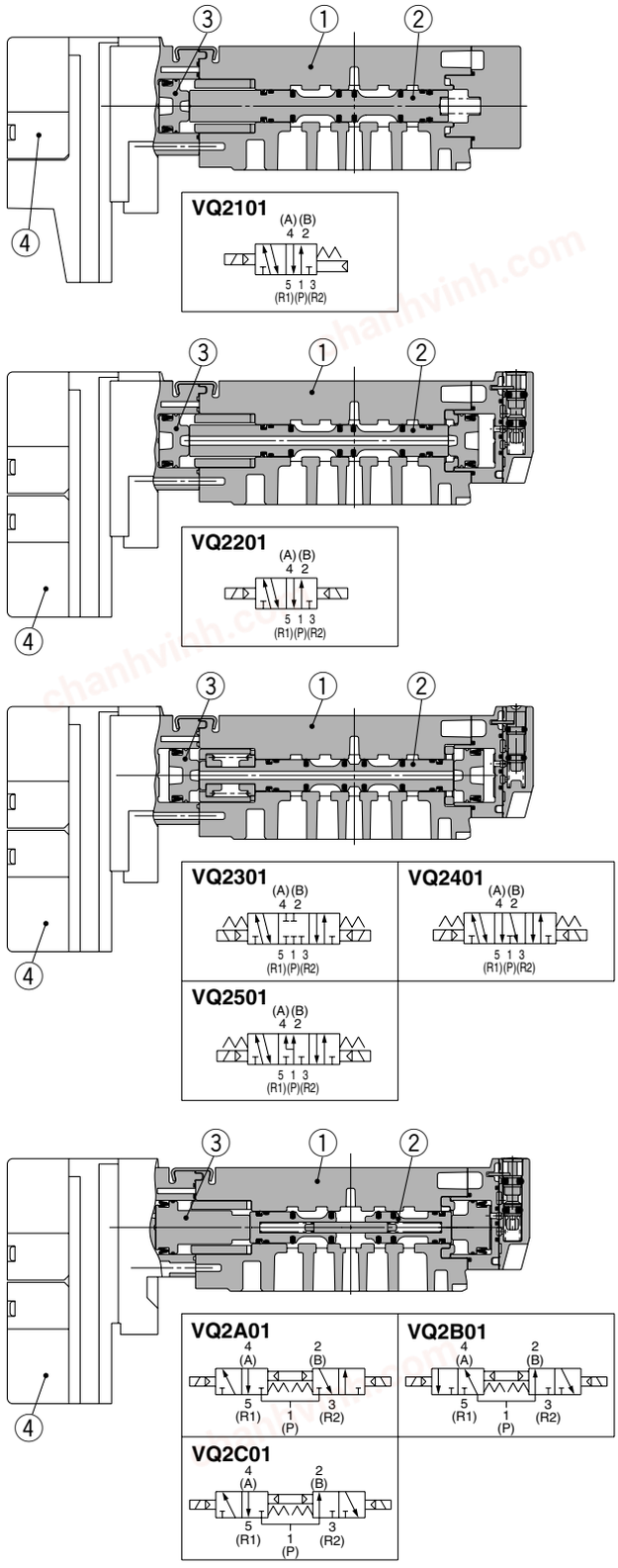

Component Parts

No.	Description	Material	Note
1	**Body**	Zinc die-casted	
2	**Spool/Sleeve**	Stainless steel	
3	**Piston**	Resin	
4	**Pilot valve assembly**	—	

Note) Refer to page 62 for “How to Order Pilot Valve Assembly”.

Component Parts

No.	Description	Material	Note
1	**Body**	Zinc die-casted	
2	**Spool valve**	Aluminum, HNBR	
3	**Piston**	Resin	
4	**Pilot valve assembly**	—	

Note) Refer to page 62 for “How to Order Pilot Valve Assembly”.

chanhvinh.com

Exploded View of Manifold

VQ1000 Plug-in Unit: Exploded View

(F/P/J/L/S kit)

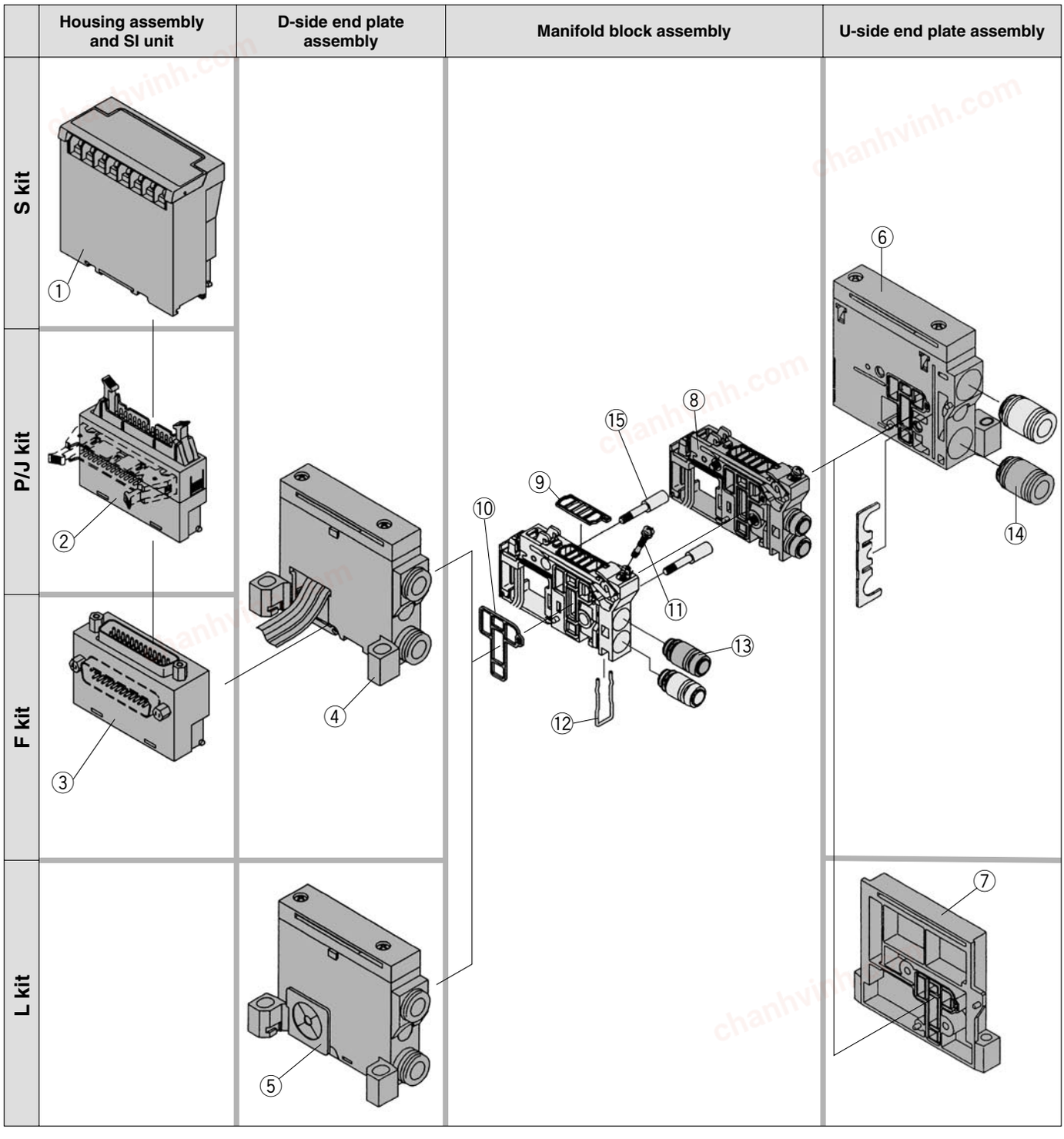

chanhvinh.com

Exploded View of Manifold

<Housing Assembly and SI Unit>

Housing assembly and SI unit no.

No.	Manifold	Part no.	Description
①	(SQ kit)	**EX120-SDN1**	DeviceNet™
	(SR1 kit)	**EX120-SCS1(-XP)** Note 2)	OMRON Corp.: CompoBus/S (16 outputs)
	(SR2 kit)	**EX120-SCS2(-XP)** Note 2)	OMRON Corp.: CompoBus/S (8 outputs)
	(SV kit)	**EX120-SMJ1(-XP)** Note 2)	CC-LINK
②	P^{U}_{S} kit	**AXT100-1-P$^{U}_{S}$**□ Note 1)	Flat ribbon cable housing assembly □ = Number of pins: 26/20/16/10
	J^{U}_{S} kit	**AXT100-1-J$^{U}_{S}$20** Note 1)	Flat ribbon cable housing assembly
③	F^{U}_{S} kit	**AXT100-1-F$^{U}_{S}$15** Note 1, 3) **AXT100-1-FS25**	D-sub connector housing assembly

Note 1) Top entry connector for FU, PU, JU while side entry connector for FS, JS, PS.
Note 2) Suffix "-XP" to the end of the part number for dust-protected SI unit. (Not available for S/SQ kit)
Note 3) F kit (D-sub connector kit) for VV5Q11 series manifold with a 25-pin connector on the end plate is one-piece structure, so no unit ③ is necessary.

<D-Side End Plate Assembly>

④⑤ D-side end plate assembly no.

VVQ1000-3A-1-□-□

Electrical entry

F	For F kit Note 3)
P	For P kit
J	For J kit
L	For L kit
S	For S kit

Option

—	Common EXH
R Note 1)	External pilot
S Note 1)	Direct EXH outlet with built-in silencer

Note 1) When both options are specified, indicate as RS.
Note 2) The housing assembly and SI unit of F/P/J/S kit are not included. Separately place an order for ①, ②, ③.
Note 3) Use following reference for D-Side end plate assembly top entry connector, 25-pins: VVQ1000-3A-1-FU25-□

<Manifold Block Assembly>

⑧ Manifold block assembly no.

Tie-rod (2 pcs.) and lead wire assembly for extensions are attached.

VVQ1000-1A-□-□

Electrical entry

F0	Without lead wire
F1	F kit for 2 to 12 stations/Double wiring
F2	F kit for 13 to 24 stations/Double wiring
F3	F kit for 2 to 24 stations/Single wiring
P1	P/J/S kit for 2 to 12 stations/Double wiring
P2	P/J/S kit for 13 to 24 stations/Double wiring
P3	P/J/S kit for 2 to 24 stations/Single wiring
L0□	L0 kit □: Stations (1 to 8)
L1□	L1 kit □: Stations (1 to 8)
L2□	L2 kit □: Stations (1 to 8)

Port size

C3	With ø3.2 one-touch fitting
C4	With ø4 one-touch fitting
C6	With ø6 one-touch fitting
M5	M5 thread
C0	Without one-touch fitting (With clip)

<Replacement Parts for Manifold Block>

Replacement Parts

No.	Part no.	Description	Material	Quantity
⑨	**VVQ1000-80A-1**	Gasket	HNBR	12
⑩	**VVQ1000-80A-2**	Packing	HNBR	12
⑪	**VVQ1000-80A-3**	Clamp screw	Carbon steel	12
⑫	**VVQ1000-80A-4**	Clip	Stainless steel	12

Note) A set of parts containing 12 pcs. each is enclosed.

<U-Side End Plate Assembly>

⑥ U-side end plate assembly no. (For F/P/J/S kit)

VVQ1000-2A-1-□

Option

—	Common EXH
R	External pilot
S	Direct EXH outlet with built-in silencer

Note) The ⑭'s fitting assembly is included.

⑦ U-side end plate assembly no. (For L kit)

VVQ1000-2A-1-L

<Fitting Assembly>

⑬ Fitting assembly part no. (For cylinder port)

VVQ1000-50A-□

Port size

C3	Applicable tubing ø3.2
C4	Applicable tubing ø4
C6	Applicable tubing ø6
M5	M5 thread

Note) Purchasing order is available in units of 10 pieces.

⑭ Fitting assembly part no. (For 1(P), 3(R) port)

VVQ1000-51A-C8

Applicable tubing ø8

Note) Purchasing order is available in units of 10 pieces.

⑮ Tie-rod assembly part no. (2 pcs./set)

VVQ1000-TR-□

Note 1) Please order when eliminating manifold stations. When adding stations, tie-rods are attached to the manifold block assembly. Therefore, it is not necessary to order.
Note 2) □: Stations 02 to 24
Note 3) For S/P/J/F/L kit

Pilot valve assembly

V112□-□□

Function

Symbol	Specifications
—	Standard
B	High-speed response type
K	High-pressure type (1.0 MPa)

Coil voltage

5	24 VDC
6	12 VDC

Enclosure

A	Dust-tight, Water-jet-proof (IP65)
B	Dust-protected

Note) Common to single solenoid and double solenoid

chanhvinh.com

Exploded View of Manifold

VQ2000 Plug-in Unit: Exploded View

(F/P/J/L/G/S kit)

	Housing assembly and SI unit	D-side end plate assembly	Manifold block assembly	U-side end plate assembly
S kit	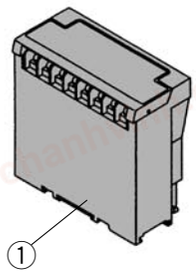	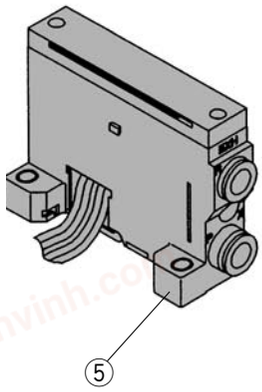	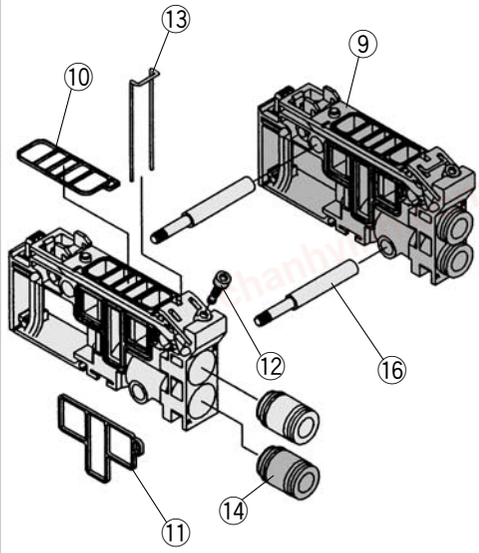	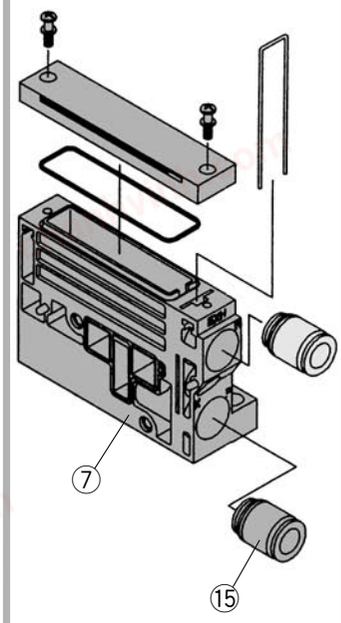
P/J kit	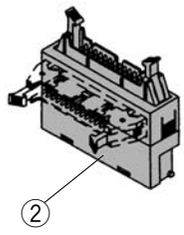			
F kit	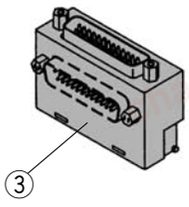			
G kit	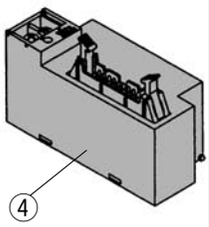			
L kit		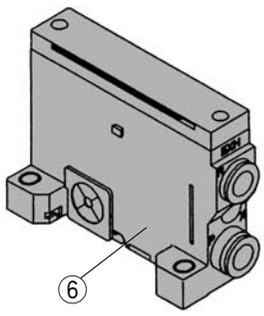		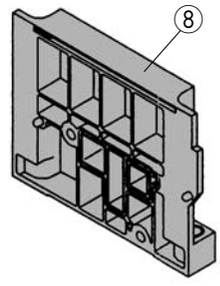

chanhvinh.com

Exploded View of Manifold

<Housing Assembly and SI Unit>

Housing assembly and SI unit no.

No.	Manifold	Part no.	Description
①	(SQ kit)	**EX120-SDN1 [EX124D-SDN1]** Note 2)	DeviceNet™
	(SR1 kit)	**EX120-SCS1(-XP)** Note 1) **[EX124D-SCS1]** Note 2)	OMRON Corp.: CompoBus/S (16 outputs)
	(SR2 kit)	**EX120-SCS2(-XP)** Note 1) **[EX124D-SCS2]** Note 2)	OMRON Corp.: CompoBus/S (8 outputs)
	(SV kit)	**EX120-SMJ1(-XP)** Note 1) **[EX124D-SMJ1]** Note 2)	CC-LINK
②	P_S^U kit	**AXT100-1-P_S^U□** Note 3)	Flat ribbon cable housing assembly □: Number of pins: 26/20/16/10
	J_S^U kit	**AXT100-1-J_S^U20** Note 3)	Flat ribbon cable housing assembly
③	F_S^U kit	**AXT100-1-F_S^U□** Note 3)	D-sub connector housing assembly □: Number of pins: 25/15
④	G kit	**AXT100-1-GU20**	Flat ribbon cable housing assembly with terminal block

Note 1) Suffix "-XP" to the end of the part number for dust-protected SI unit.
Note 2) Dust-tight, Water-jet-proof (IP65)
Note 3) Top entry connector for FU, PU, JU while side entry connector for FS, PS, JS.

<D-Side End Plate Assembly>

⑤⑥ D-side end plate assembly no.

VVQ2000-3A-1-□-□□

Electrical entry

F	For F kit
P	For P kit
J	For J kit
L	For L kit
G	For G kit
S	For S kit

Enclosure

—	Dust-protected
W	Dust-tight, Water-jet-proof (IP65)

Note) F/P/J/G kit are only available with "—" option. M kit is available with [W] only. S/L/T kit are selectable depending on the manifold type.

Option

Nil	Common EXH
R Note 1)	External pilot
S Note 1)	Direct EXH outlet with built-in silencer

Note 1) When both options are specified, indicate as RS.
Note 2) The housing assembly and SI unit of F/P/J/G/S kit are not included. Separately place an order for ①, ②, ③, ④.
Note 3) "S" (Built-in silencer) and "W" (IP65) cannot be combined.

<U-Side End Plate Assembly>

⑦ U-side end plate assembly no. (For F/P/J/G/T/S/M kit)

VVQ2000-2A-1-□□

Option

—	Common EXH
R	External pilot
S	Direct EXH outlet with built-in silencer

Enclosure

—	Dust-protected
W	Dust-tight, Water-jet-proof (IP65)

Note) F/P/J/G kit are only available with "—" option. M kit is available with [W] only. S/L/T kit are selectable depending on the manifold type.

Note 1) The ⑮'s fitting assembly is included.
Note 2) The housing assembly and SI unit of F/P/J/G/S kit are not included. Separately place an order for ①, ②, ③, ④.
Note 3) "S" (Built-in silencer) and "W" (IP65) cannot be combined.

⑧ U-side end plate assembly no. (For L kit)

VVQ2000-2A-1-L-□

Enclosure

—	Dust-protected
W	Dust-tight, Water-jet-proof (IP65)

Note) Select it depending on the manifold type.

<Manifold Block Assembly>

⑨ Manifold block assembly no.

Tie-rod (2 pcs.) and lead wire assembly for extensions are attached.

VVQ2000-1A-□-□-□

Electrical entry

F0	Without lead wire
F1	F kit for 2 to 12 stations/Double wiring
F2	F kit for 13 to 24 stations/Double wiring
F3	F kit for 2 to 24 stations/Single wiring
P1	P/J/G/S kit for 2 to 12 stations/Double wiring
P2	P/J/G/S kit for 13 to 24 stations/Double wiring
P3	P/J/G/S kit for 2 to 24 stations/Single wiring
L0□	L0 kit □: Stations (1 to 8)
L1□	L1 kit □: Stations (1 to 8)
L2□	L2 kit □: Stations (1 to 8)
T1	T kit for 2 to 20 stations/Double wiring
T3	T kit for 2 to 20 stations/Single wiring
M1	M kit for 2 to 12 stations/Double wiring
M2	M kit for 13 to 24 stations/Double wiring
M3	M kit for 2 to 24 stations/Single wiring

Port size

C4	With ø4 one-touch fitting
C6	With ø6 one-touch fitting
C8	With ø8 one-touch fitting
C0	Without one-touch fitting (With clip)

Enclosure

—	Dust-protected
W	Dust-tight, Water-jet-proof (IP65)

Note) F/P/J/G kit are available with "Nil" only. M kit is available with [W] only. S/L/T kit are selectable depending on the manifold type.

<Fitting Assembly>

⑭ Fitting assembly part no. (For cylinder port)

VVQ1000-51A-□

Port size

C4	Applicable tubing ø4
C6	Applicable tubing ø6
C8	Applicable tubing ø8

Note) Purchasing order is available in units of 10 pieces.

⑮ Fitting assembly part no. (For 1(P), 3(R) port)

VVQ2000-51A-C10

Applicable tubing ø10

Note) Purchasing order is available in units of 10 pieces.

⑯ Tie-rod assembly part no. (2 pcs./set)

VVQ2000-TR-□

Note 1) Please order when eliminating manifold stations.
When adding stations, tie-rods are attached to the manifold block assembly. Therefore, it is not necessary to order.
Note 2) □: Stations 02 to 24
Note 3) For S/P/J/F/L kit

<Replacement Parts for Manifold Block>

Replacement Parts

No.	Part no.	Description	Material	Quantity
⑩	**VVQ2000-80A-1**	Gasket	HNBR	12
⑪	**VVQ2000-80A-2**	Seal	HNBR	12
⑫	**VVQ2000-80A-3**	Clamp screw	Carbon steel	12
⑬	**VVQ2000-80A-4**	Clip	Stainless steel	12

Note) A set of parts containing 12 pcs. each is enclosed.

chanhvinh.com

Series VQ1000

VQ1000: Manifold Optional Parts

Blanking plate assembly
VVQ1000-10A-1

JIS symbol



It is used by attaching on the manifold block for being prepared for removing a valve for maintenance reasons or planning to mount a spare valve, etc.

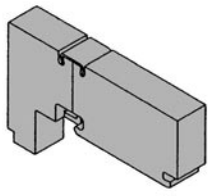

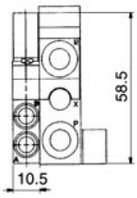

Individual SUP spacer
VVQ1000-P-1- C6 / N7

When the same manifold is to be used for different pressures, individual SUP spacers are used as SUP ports for different pressures. (One station space is occupied.)
Block both sides of the station, for which the supply pressure from the individual SUP spacer is used, with SUP block plates. (Refer to the application example.)

Note 1) Specify the spacer mounting position and SUP block plate position by means of the manifold specification sheet. The block plate is used in one or two places for one set. (Two SUP block plates for blocking SUP station are attached to the individual SUP spacer.)
Note 2) As a standard, electric wiring is connected to the position of the manifold station where the individual SUP spacer is mounted.
Note 3) If wiring is not required for stations equipped with spacers, enter "X" in the special wiring specifications column in the manifold specification sheet.

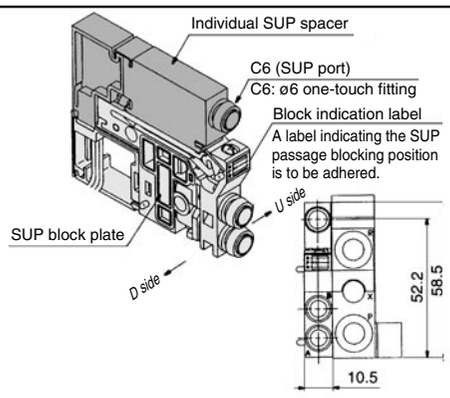

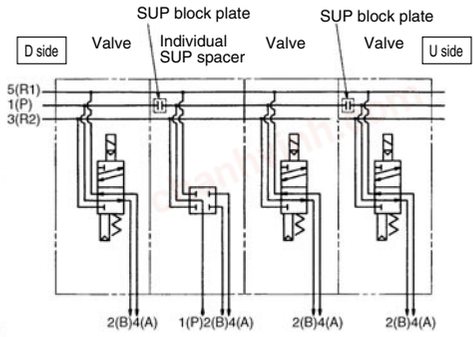

Individual EXH spacer
VVQ1000-R-1- C6 / N7

When valve exhaust affects other stations due to the circuit configuration, this spacer is used for individual valve exhaust. (One station space is occupied.)
Block both sides of the individual valve EXH station. (Refer to the application example.)

Note 1) Specify the mounting position, as well as the EXH block base or EXH block plate position by means of the manifold specification sheet. The block plate is used in one or two places for one set.
Note 2) An EXH block base assembly is used in the blocking position when ordering an EXH spacer incorporated with a manifold no. However, do not order an EXH block base assembly because it is attached to the spacer.
When separately ordering an individual EXH spacer, separately order an EXH block base assembly because it is not attached to the spacer.
Note 3) As a standard, electric wiring is connected to the position of the manifold station where the individual EXH spacer is mounted.
Note 4) If wiring is not required for stations equipped with spacers, enter "X" in the special wiring specifications column in the manifold specification sheet.

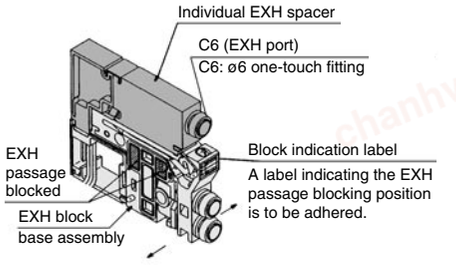

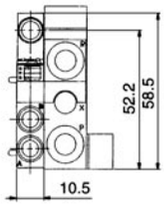

Description/Model	Stations	1	2	3	4	5	6	7
Valve	Single	●		●	●			
Option	Individual EXH spacer VVQ1000-R-1-C6		●					
	EXH blocking position: Specify 2 places.	●		●				

Individual EXH spacer + EXH block base assembly | **Valve + EXH block base assembly**

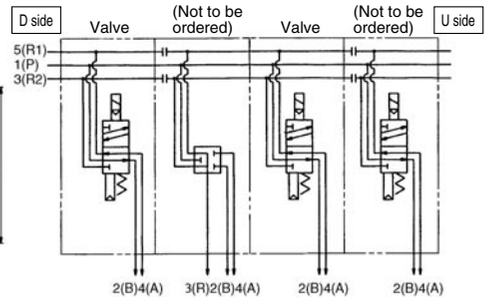

SUP block plate
VVQ1000-16A

When different pressures are supplied to a manifold, a SUP block plate is used to block the stations under different pressures.

Note) Specify the mounting position by means of the manifold specification sheet.

<Block indication label>
Indication labels to confirm the blocking position are attached (Each for SUP passage and SUP/EXH passage blocking positions).

Note) When ordering a block plate incorporated with a manifold, a block indication label is attached to the manifold.

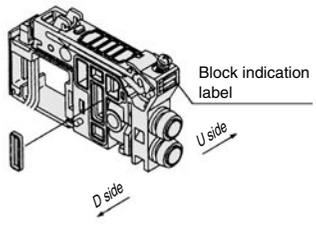

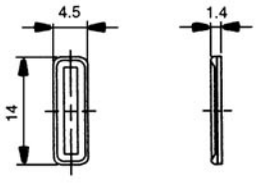

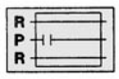

SUP passage blocked

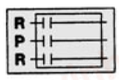

SUP/EXH passage blocked

Blanking plate with connector
VVQ1000-1C□-□

JIS symbol



Connector

—	Without connector
1	With connector/2-wire
2	With connector/4-wire

Connector lead wire length (mm)

—	300	20	2000
6	600	25	2500
10	1000	30	3000
15	1500		

Blanking plate with a connector for individually outputting electricity to drive a single valve or equipment that are not on the manifold base.
Note) When "N" is suffixed to the end of the name plate, the plate will be different from a standard shape.
Note) Electric current should be 1A or less (including the mounted valves).

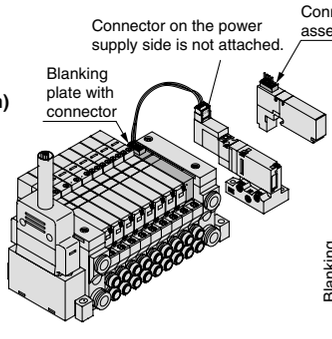

Connector assembly part no.
AXT661- 43 / 44 **A-** 6

43	4-wire
44	2-wire

Lead wire length (mm)

—	300
6	600
10	1000
20	2000
30	3000

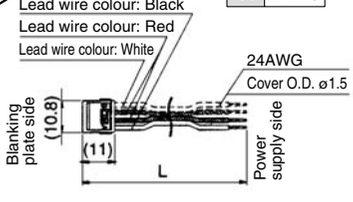

chanhvinh.com

EXH block base assembly
VVQ1000-19A-P□-(C3/C4/C6/M5/N1/N3/N7)

Manifold block assembly
Electrical entry

F0	Without lead wire
F1	For F kit (2 to 12 stations)/Double wiring
F2	For F kit (13 to 24 stations)/Double wiring
F3	For F kit (2 to 24 stations)/Single wiring
P1	For P, G, T, S kit (2 to 12 stations)/Double wiring
P2	For P, G, T, S kit (13 to 24 stations)/Double wiring
P3	For P, G, T, S kit (2 to 24 stations)/Single wiring
L0*	L0 kit
L1*	L1 kit * 1 to 8 stations
L2*	L2 kit

The manifold block assembly is used between stations for which exhaust is desired to be divided when valve exhaust affects other stations due to the circuit configuration. The EXH passage on the D-side is blocked in the EXH block base assembly. It is also used in combination with an individual EXH spacer for individual exhaust.

<Block indication label>
Indication labels to confirm the blocking position are attached. (Each for EXH passage and SUP/EXH passage blocking positions)

Note 1) When ordering a EXH block base incorporated with a manifold, a block indication label is attached to the manifold.

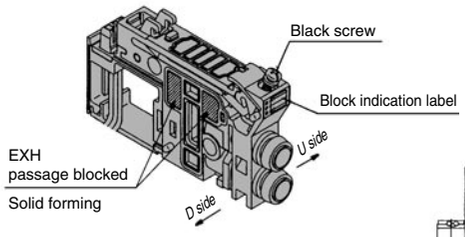

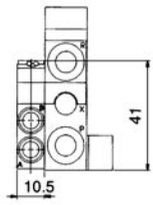

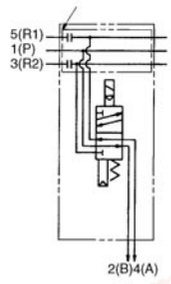

Note 2) Specify the mounting station by means of the manifold specification sheet.

Note 3) When ordering this option incorporated with a manifold, specify the EXH block base assembly part number with "*" in front of it beneath the

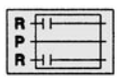

EXH passage blocked

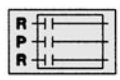

SUP/EXH passage blocked

Back pressure check valve assembly [-B]
VVQ1000-18A

It prevents cylinder malfunction caused by other valve exhaust entry. Insert it into R (EXH) port on the manifold side of a valve which is affected. It is effective when a single-acting cylinder is used or an exhaust centre type solenoid valve is used.

Note 1) When ordering it being mounted on all manifold stations, suffix "-B" to the end of the manifold part number.

Note 2) When a back pressure check valve is desired, and is to be installed only in certain manifold stations, clearly indicate the part number and specify the mounting station by means of the manifold specification sheet.

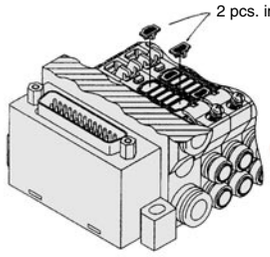

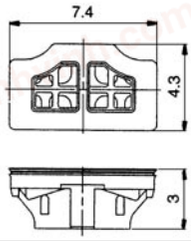

(Precautions)
1. The back pressure check valve assembly is the parts with a check valve structure. However, since the valve has slight air leakage, take precautions for the exhaust air not to be restricted at the exhaust port.
2. When a back pressure check valve is mounted, the effective area of the valve will decrease by about 20%.

Name plate [-N]
VVQ1000-N/NC-N-Station (1 to Max. stations)

N: Standard
NC: For mounting blanking plate with connector

It is a transparent resin plate for placing a label that indicates solenoid valve function, etc.
Insert it into the groove on the side of the end plate and bend it as shown in the figure.

Note 1) When the blanking plate with connector is mounted, it automatically will be "VVQ1000-NC-n"

Note 2) When ordering this option incorporated with a manifold, suffix "-N" to the end of the manifold

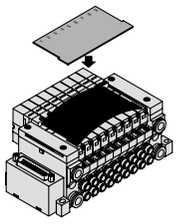

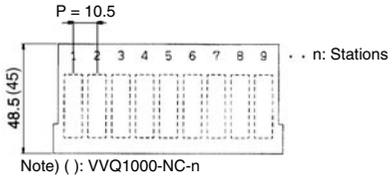

Blanking plug (For one-touch fittings)
KQ2P-□

It is inserted into an unused cylinder port and SUP/EXH ports.
Purchasing order is available in units of 10 pieces.

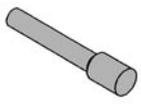

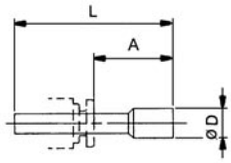

Dimensions

Applicable fitting size ød	Model	A	L	D	Applicable fitting size ød	Model	A	L	D
3.2	**KQ2P-23**	16	31.5	3.2	1/8"	**KQ2P-01**	16	31.5	5
4	**KQ2P-04**	16	32	6	5/32"	**KQ2P-03**	16	32	6
6	**KQ2P-06**	18	35	8	1/4"	**KQ2P-07**	18	35	8.5
8	**KQ2P-08**	20.5	39	10	5/16"	**KQ2P-09**	20.5	39	10

Port plug
VVQ0000-58A

The plug is used to block the cylinder port.

Note 1) When ordering this option incorporated with a manifold, indicate "CM" for the port size of the manifold part number, as well as, the mounting station and cylinder port mounting positions 4(A) and 2(B) by means of the manifold specification sheet.

Note 2) Gently screw an M3 screw in the port plug hole and pull it for removal.

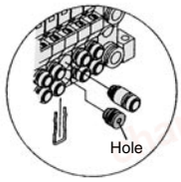

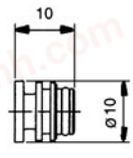

Elbow fitting assembly
VVQ1000-F-L(C3/C4/C6/M5/N1/N3/N7)

It is used for piping that extends upward or downward from the manifold.

Note 1) When ordering this option incorporated with a manifold, indicate "L□" or "B□" for the manifold port size (when installed in all stations.)
When installing it in part of the manifold stations, specify the elbow fitting assembly part number and the mounting station by means of the manifold specification sheet.

Note 2) When mounting elbow fitting assembly on the edge of manifold station and a silencer on EXH port, select a silencer, AN203-KM8.
A silencer (AN200-KM8) is interfered with fittings.

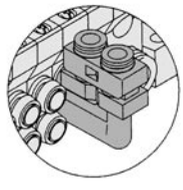

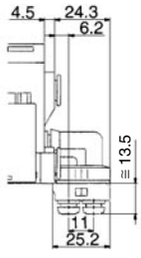

Downward

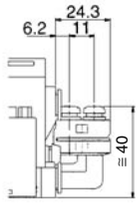

Upward

chanhvinh.com

Series VQ1000

VQ1000: Manifold Optional Parts

DIN rail mounting bracket [-D/-D0/-D□]
VVQ1000-57A

It is used for mounting a manifold on a DIN rail.

Note 1) When ordering this option incorporated with a manifold, suffix "D" to the end of the manifold part number.

1 set of DIN rail mounting bracket is used for 1 manifold (2 DIN rail mounting brackets).

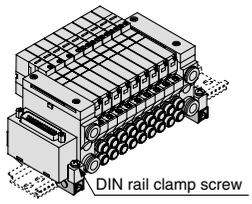

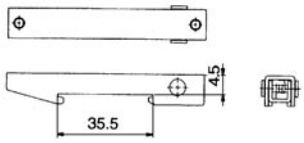

Mounting screws are attached.

Direct EXH outlet with built-in silencer [-S]

This is a type with an exhaust port a top the manifold end plate. The built-in silencer exhibits an excellent noise suppression effect. (Noise reduction: 30 dB)

Note 1) When ordering this option incorporated with a manifo,ld, suffix "S" to the end of the manifold part number.

Note) A large quantity of drainage generated in the air source results in exhaust of air together with drainage.

● Refer to back page 5 for maintenance.

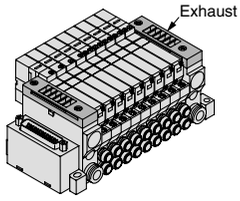

Dual flow fitting assembly
VVQ1000-52A- C8 / N9

This is a fitting to multiply the flow rate by combining the outputs of 2 valve stations. It is used for driving a large bore cylinder. This is a one-touch fitting for a port size of ø8 or ø5/16".

Note 1) The port size for the manifold part number is "CM". Clearly indicate the dual flow fitting assembly part number and specify the mounting station by means of the manifold specifications.

Note 2) In dual flow fitting assembly, a special clip which is combined in one-piece of 2 stations is attached as a holding clip.

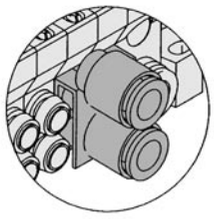

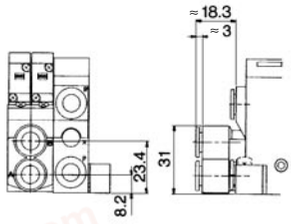

Silencer (For EXH port)

This silencer is to be inserted into the EXH port (one-touch fittings) of the common exhaust type.

Note 1) When mounting elbow fitting assembly (VVQ1000-F-L□) on the edge of manifold station, select a silencer, AN203-KM8. A silencer (AN200-KM8) is interfered with fittings.

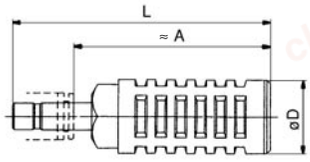

Dimensions

Series	Applicable fitting size ød	Model	A	L	D	Effective area (mm²)	Noise reduction (dB)
VQ1000	8	AN200-KM8	59	78	22	20	30
		AN203-KM8	32	51	16	14	25*

Regulator unit
VVQ1000-AR-1

The regulator controls the SUP pressure in a manifold. Supply air from D-side SUP port is regulated. SUP port on U-side is plugged.

When a regulator unit is mounted, the SUP port on the U-side of the manifold will be plugged. A maximum of 3 units can be mounted on a manifold.

Specifications

Maximum operating pressure (MPa)	0.8
Set pressure range (MPa)	0.05 to 0.7
Ambient and fluid temp. (°C)	5 to 50
Fluid	Air
Cracking pressure valve (MPa)	0.02
Structure	Relieving type

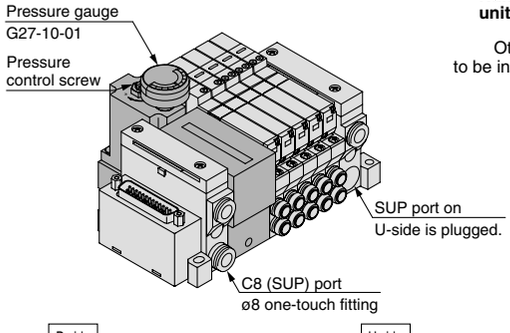

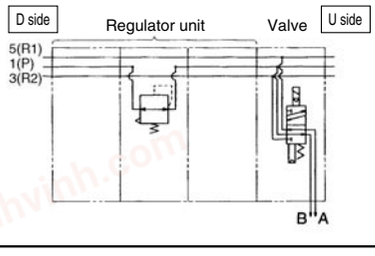

• How to Order

Indicate an option symbol "-G*" for the manifold no. and be sure to specify the mounting position and number of stations by means of the manifold specification sheet. One unit is counted as one station and occupies a space for three stations, therefore, pay attention to the manifold size. The regulator valve unit, to which no wire is connected, valves can be mounted up to the standard max. number of stations of each kit.

How to Order Manifold

VV5Q11-14C6FUO-D G 2

- **Number of manifold stations**
  Number of mounted valves ··· 12 sets
  +
  Number of regulator units ··· 2 sets
- **With regulator unit**
- **Number of regulator units ··· 2 sets**

Others, option symbols: to be indicated alphabetically.

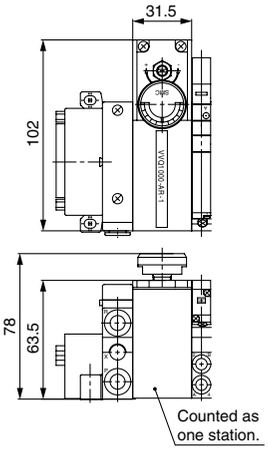

Flow Characteristics

Conditions: Inlet pressure 0.7 MPa

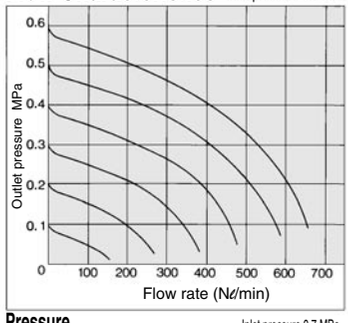

Pressure Characteristics

Conditions (Initial setting) Inlet pressure 0.7 MPa Outlet pressure 0.2 MPa

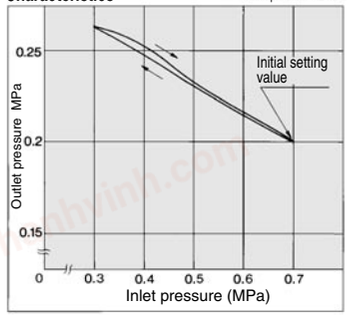

⚠ Caution

• Pressure setting

Check the inlet pressure and then turn the pressure control screw to set the outlet pressure. Turning the screw clockwise will increase the outlet pressure while turning it counterclockwise decrease the pressure. (Set the pressure by turning the screw in the increase direction.)

• Installation

Since some level of the actuator's operational frequency may lead to a sharp pressure change, pay attention to the pressure gauge durability.

chanhvinh.com

Double check block (Separated) for VQ1000
VQ1000-FPG-□□-□

It is used on the outlet side piping to keep the cylinder in the intermediate position for a long time. Combining the double check block with a built-in pilot type double check valve and a 3-position exhaust centre solenoid valve will enable the cylinder to stop in the middle or maintain its position for long periods of time.
The combination with a 2-position single/double solenoid valve will permit this block to be used for preventing the dropping at the cylinder stroke end when the SUP residual pressure is released.

Specifications

Max. operating pressure	0.8 MPa
Min. operating pressure	0.15 MPa
Ambient and fluid temp.	–5 to 50°C
Flow characteristics: C	0.60 dm³/(s·bar)
Max. operating frequency	180 c.p.m

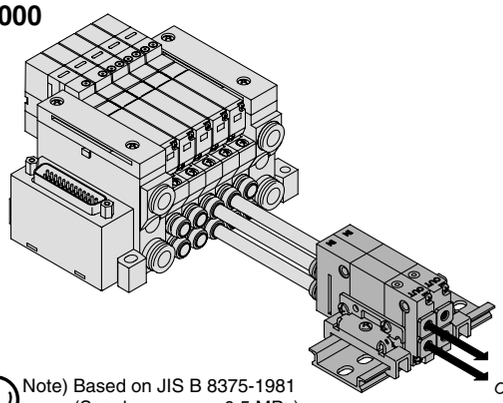

Note) Based on JIS B 8375-1981
(Supply pressure: 0.5 MPa)

<Circuit diagram>

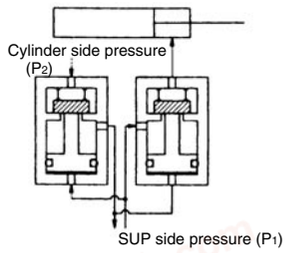

VVQ1000-FPG-02 1 set
* VQ1000-FPG-C6M5-D 2 pcs.

Dimensions

Single unit

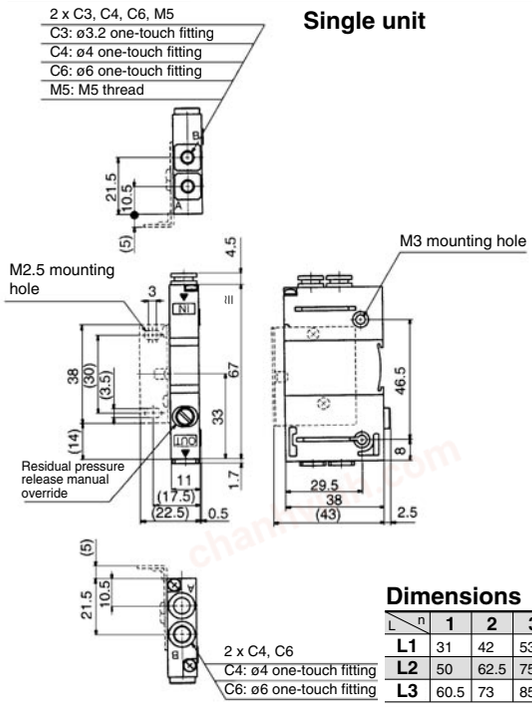

Manifold

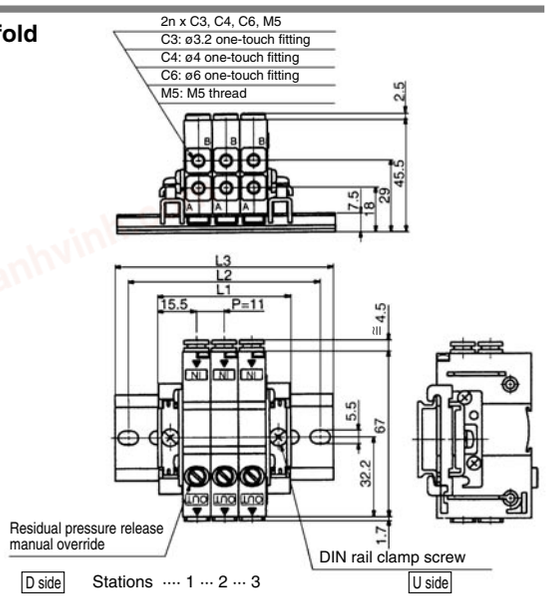

Dimensions Formula L1 = 11n + 20 n: Station (Maximum 24)

L \ n	1	2	3	4	5	6	7	8	9	10	11	12
L1	31	42	53	64	75	86	97	108	119	130	141	152
L2	50	62.5	75	87.5	100	112.5	125	125	137.5	150	162.5	175
L3	60.5	73	85.5	98	110.5	123	135.5	135.5	148	160.5	173	185.5

L \ n	13	14	15	16	17	18	19	20	21	22	23	24
L1	163	174	185	196	207	218	229	240	251	262	273	284
L2	187.5	187.5	200	212.5	225	237.5	250	250	262.5	275	287.5	300
L3	198	198	210.5	223	235.5	248	260.5	260.5	273	285.5	298	310.5

How to Order

Double check block

VQ1000 – FPG – C4 M5 – F

IN side port size

M5	M5 thread
C3	ø3.2 one-touch fitting
C4	ø4 one-touch fitting
C6	ø6 one-touch fitting
N3	ø5/32" one-touch fitting
N7	ø1/4" one-touch fitting

OUT side port size

M5	M5 thread
C3	ø3.2 one-touch fitting
C4	ø4 one-touch fitting
C6	ø6 one-touch fitting
N3	ø5/32" one-touch fitting
N7	ø1/4" one-touch fitting

Option

—	None
F	With bracket
D	DIN rail mounting (For manifold)
N	Name plate

Note) When two or more symbols are specified, indicate them alphabetically. Example) -DN

<Example>

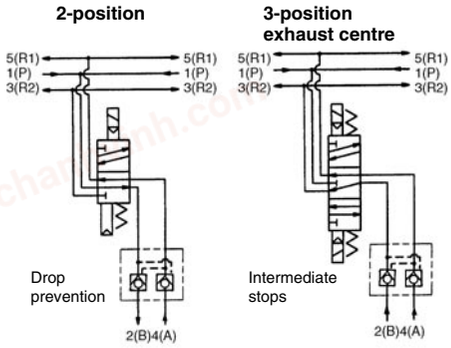

Manifold (DIN rail mounting)

VVQ1000 – FPG – 06

When ordering a double check block, order the DIN rail mounting [-D].

Stations

01	1 station
⋮	⋮
16	16 stations

<Ordering example>
VVQ1000-FPG-06···6-station manifold
*VQ1000-FPG-C4M5-D, 3 sets
*VQ1000-FPG-C6M5-D, 3 sets
} Double check block

Bracket Assembly

Part no.	Tightening torque
VQ1000-FPG-FB	0.22 to 0.25 N·m

⚠ Caution

- Air leakage from the pipe between the valve and cylinder or from the fittings will prevent the cylinder from stopping for long periods of time. Check the leakage using neutral household detergent, such as dish washing soap. Also check the cylinder's tube gasket, piston packing and rod packing for air leakage.
- Since one-touch fittings allow slight air leakage, screw piping (with M5 thread) is recommended when stopping the cylinder in the middle for long periods of time.
- Combining double check block with 3-position closed centre or pressure centre solenoid valve will not work.
- M5 fitting assembly is attached, not incorporated into the double check block. After screwing in the M5 fittings, mount the assembly on the double check block. {Tightening torque: 0.8 to 1.2 N·m}
- If the exhaust of the double check block is restricted too much, the cylinder may not operate properly and may not stop intermediately.
- Set the cylinder load so that the cylinder pressure will be within two times that of the supply pressure.

chanhvinh.com

VQ2000: Manifold Optional Parts

Blanking plate assembly
VVQ2000-10A-1

JIS symbol



It is used by attaching on the manifold block for being prepared for removing a valve for maintenance reasons or planning to mount a spare valve, etc.

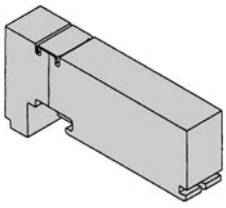

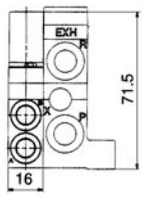

Individual SUP spacer
VVQ2000-P-1-$^{C8}_{N9}$

When the same manifold is to be used for different pressures, individual SUP spacers are used as SUP ports for different pressures. (One station space is occupied.)
Block both sides of the station, for which the supply pressure from the individual SUP spacer is used, with SUP block plates. (Refer to the application example.)
Note 1) Specify the spacer mounting position and SUP block plate position by means of the manifold specification sheet. The block plate is used in one or two places for one set. (Two SUP block plates for blocking SUP station are attached to the individual SUP spacer.)
Note 2) As a standard, electric wiring is connected to the position of the manifold station where the individual SUP spacer is mounted.
Note 3) If wiring is not required for stations equipped with spacers, enter "X" in the special wiring specifications column in the manifold specification sheet.

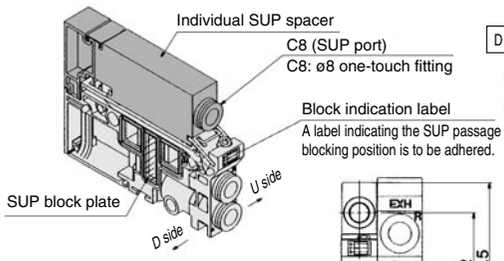

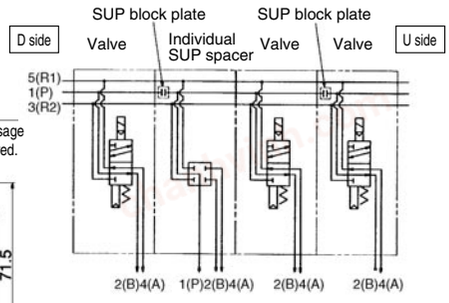

Individual EXH spacer
VVQ2000-R-1-$^{C8}_{N9}$

When valve exhaust affects other stations due to the circuit configuration, this spacer is used for individual valve exhaust. (One station space is occupied.)
Block both sides of the individual valve EXH station. (Refer to the application example.)
Note 1) Specify the mounting position, as well as the EXH block base or EXH block plate position by means of the manifold specification sheet. The block plate is used in one or two places for one set. (Two EXH block plates for blocking EXH station are attached to the individual EXH spacer.)
Note 2) As a standard, electric wiring is connected to the position of the manifold station where the individual EXH spacer is mounted.
Note 3) If wiring is not required for stations equipped with spacers, enter "X" in the special wiring specifications column in the manifold specification sheet.

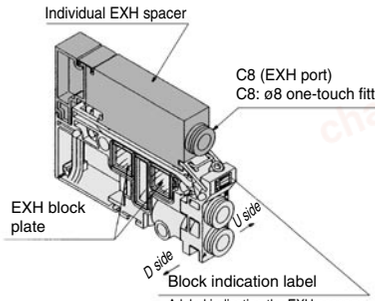

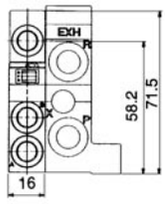

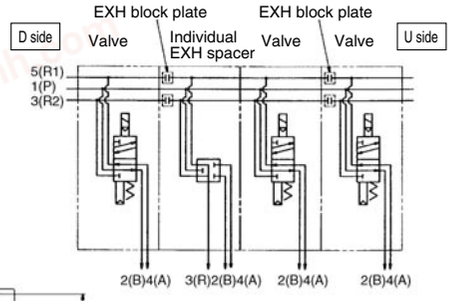

SUP block plate
VVQ2000-16A

When different pressures are supplied to a manifold, a SUP block plate is used to block the stations under different pressures.

Note) Specify the mounting position by means of the manifold specification sheet.

<Block indication label>
Indication labels to confirm the blocking position are attached. (Each for SUP passage and SUP/EXH passage blocking positions)

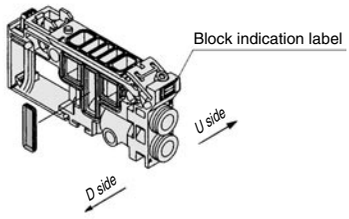

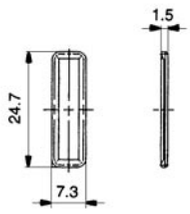

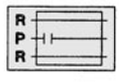

SUP passage blocked

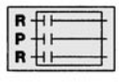

SUP/EXH passage blocked

Note) When ordering a block plate incorporated with a manifold, a block indication label is attached to the manifold.

EXH block plate
VVQ2000-19A

The EXH block plate is used between stations for which exhaust is desired to be divided when valve exhaust affects other stations configuration. It is also used in combination with an individual EXH spacer for individual exhaust.

Note) Specify the mounting position by means of the manifold specification sheet.

<Block indication label>
Indication labels to confirm the blocking position are attached. (Each for EXH passage and SUP/EXH passage blocking positions)

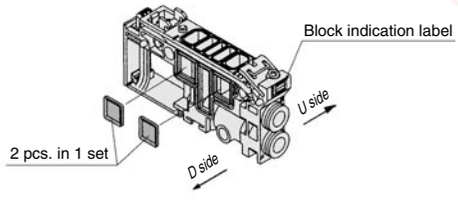

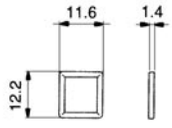

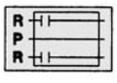

EXH passage blocked

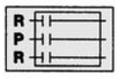

SUP/EXH passage blocked

Note) When ordering a block plate incorporated with a manifold, a block indication label is attached to the manifold.

chanhvinh.com

SUP stop valve spacer
VVQ2000-24A-1

A SUP stop valve spacer is mounted on a manifold block, making it possible to individually shut off supply air to each valve.
Enclosure: Dust-tight, Water-jet-proof (IP65) compliant

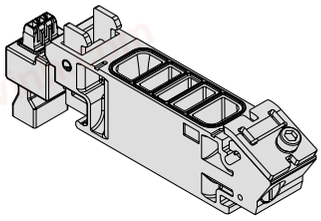

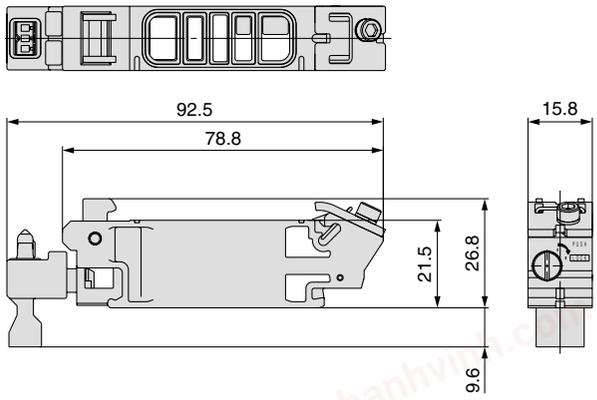

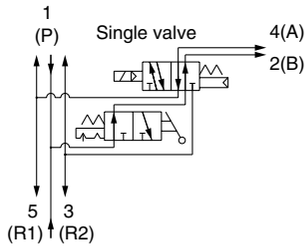

<Circuit diagram>
(Example of a spacer with a built-in single valve)

Back pressure check valve assembly [-B]
VVQ2000-18A

It prevents cylinder malfunction caused by other valve exhaust entry. Insert it into R (EXH) port on the manifold side of a valve which is affected. It is effective when a single-acting cylinder is used or an exhaust centre type solenoid valve is used.
Note 1) When ordering assemblies incorporated with a manifold, add suffix "-B" to the end of the manifold part number.
Note 2) When a check valve for back pressure prevention is desired and is to be installed only in certain manifold stations, clearly indicate the part number and specify the mounting position by means of the manifold specification sheet.



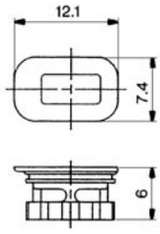

(Precautions)
1. The back pressure check valve assembly is assembly parts with a check valve structure. However, since the valve has slight air leakage, take precautions for the exhaust air not to be restricted at the exhaust port.
2. When a back pressure check valve is mounted, the effective area of the valve will decrease by about 20%.

Name plate [-N]
VVQ2000-N-Station (1 to Max. stations)

It is a transparent resin plate for placing a label that indicates solenoid valve function, etc.
Insert it into the groove on the side of the end plate and bend it as shown in the figure.
Note) When ordering this option incorporated with a manifold, suffix "-N" to the end of the manifold part number.

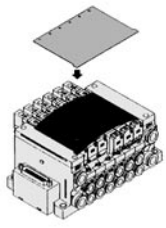

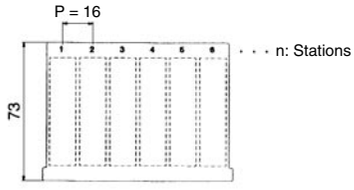

Blanking plug (For one-touch fittings)
KQ2P-□

It is inserted into an unused cylinder port and SUP/EXH ports. Purchasing order is available in units of 10 pieces.

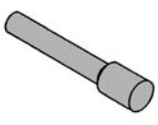

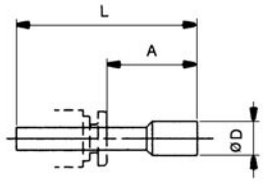

Dimensions

Applicable fitting size ød	Model	A	L	D	Applicable fitting size ød	Model	A	L	D
4	**KQ2P-04**	16	32	6	5/32"	**KQ2P-03**	16	32	6
6	**KQ2P-06**	18	35	8	1/4"	**KQ2P-07**	18	35	8.5
8	**KQ2P-08**	20.5	39	10	5/16"	**KQ2P-09**	20.5	39	10
10	**KQ2P-10**	22	43	12	3/8"	**KQ2P-11**	22	43	11.5

Port plug
VVQ1000-58A

The plug is used to block the cylinder port.
Note) When ordering a plug incorporated with a manifold, indicate "CM" for the port size of the manifold part number, as well as, the mounting position and number of stations and cylinder port mounting positions, A and B by means of the manifold specification sheet.

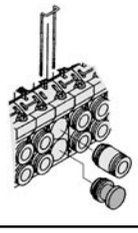

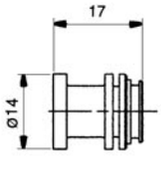

chanhvinh.com

VQ2000: Manifold Optional Parts

DIN rail mounting bracket [-D/-D0/-D□]
VVQ2000-57A

It is used for mounting a manifold on a DIN rail.
Note) When ordering this option incorporated with a manifold, suffix "-D" to the end of the manifold part number.

1 set of DIN rail mounting bracket is used for 1 manifold (2 DIN rail mounting brackets).

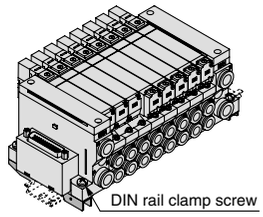

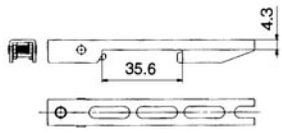

Direct EXH outlet with built-in silencer [-S]

This is a type with an exhaust port atop the manifold end plate. The built-in silencer exhibits an excellent noise suppression effect. (Noise reduction: 30 dB)
Note 1) When ordering this option incorporated with a manifold, suffix "-S" to the end of the manifold part number.
Note 2) A large quantity of drainage generated in the air source results in exhaust of air together with drainage.

● Refer to back page 5 for maintenance.

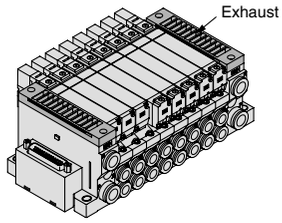

Silencer (For EXH port)

This silencer is to be inserted into the EXH port (One-touch fittings).

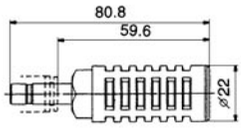

Dimensions

Series	Applicable fitting size ød	Model	A	L	D	Effective area (mm²) (Cv factor)	Noise reduction (dB)
VQ2000	10	AN200-KM10	59.6	80.8	22	26 (1.4)	30

Elbow fitting assembly
VVQ2000-F-L(C4/C6/C8/N3/N7/N9)

It is used for piping that extends upward or downward from the manifold.
When not installed in the manifold stations, specify the assembly part number and the mounting position by means of the manifold specification sheet.



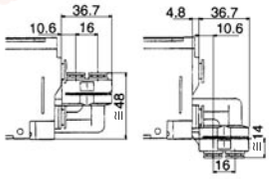

Dual flow fitting assembly
VVQ2000-52A-$^{C10}_{N11}$

This is a fitting to multiply the flow rate by combining the outputs of 2-valve stations. It is used for driving a large bore cylinder. This is a one-touch fitting for a port size of ø10 or ø3/8".

Note) The port size for the manifold part number is "CM".
Clearly indicate the dual flow fitting assembly part number and specify the mounting position by means of the manifold specifications.



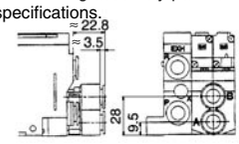

chanhvinh.com

Manifold Option

Double check block (Separated) for VQ2000

VQ2000-FPG-□□-□

It is mounted on the outlet side piping to keep the cylinder in the intermediate position for a long time. Combining the double check block with a 3-position exhaust centre solenoid valve will enable the cylinder to stop in the middle or maintain its position for long periods of time.
The combination with a 2-position single/double solenoid valve will prevent the dropping at the cylinder stroke end when the SUP residual pressure is released.

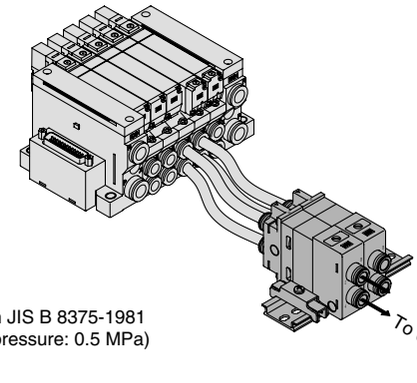

<Circuit diagram>

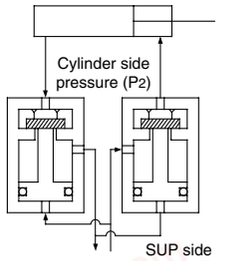

Specifications

Max. operating pressure	0.8 MPa
Min. operating pressure	0.15 MPa
Ambient and fluid temp.	–5 to 50°C
Flow characteristics: C	3.0 dm³/(s·bar)
Max. operating frequency	180 c.p.m

Note) Based on JIS B 8375-1981
(Supply pressure: 0.5 MPa)

Dimensions

Single unit

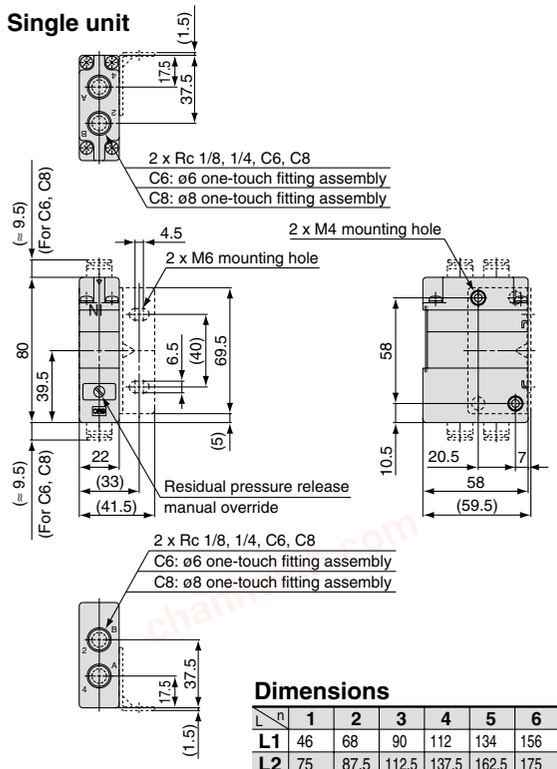

Manifold

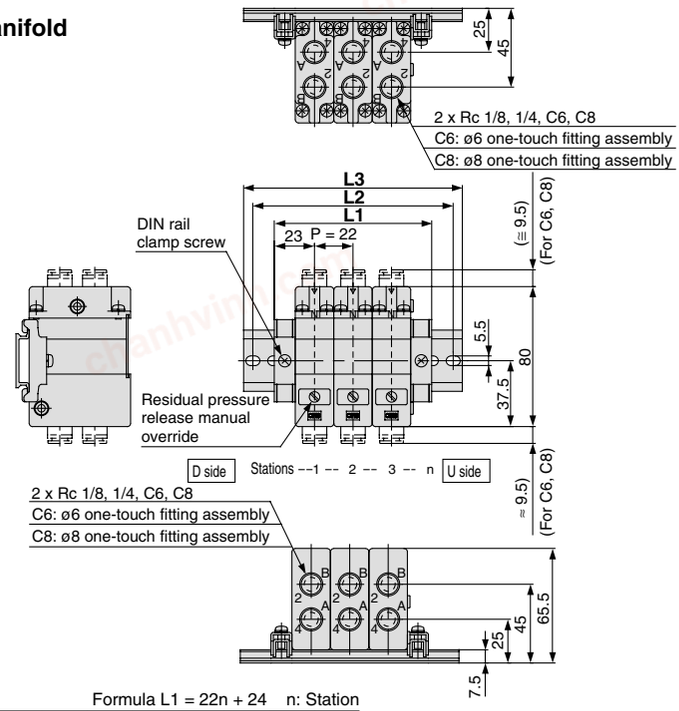

Dimensions

Formula L1 = 22n + 24 n: Station

L \ n	1	2	3	4	5	6	7	8	9	10	11	12	13	14	15	16
L1	46	68	90	112	134	156	178	200	222	244	266	288	310	332	354	376
L2	75	87.5	112.5	137.5	162.5	175	200	225	250	262.5	287.5	312.5	337.5	362.5	375	400
L3	85.5	98	123	148	173	185.5	210.5	235.5	260.5	273	298	323	348	373	385.5	410.5

How to Order

Double check block

VQ2000-FPG- 01 01 - F

IN side port size

01	Rc 1/8
02	Rc 1/4
C6	ø6 one-touch fitting
C8	ø8 one-touch fitting
N7	ø1/4" one-touch fitting
N9	ø5/16" one-touch fitting

OUT side port size

01	Rc 1/8
02	Rc 1/4
C6	ø6 one-touch fitting
C8	ø8 one-touch fitting
N7	ø1/4" one-touch fitting
N9	ø5/16" one-touch fitting

Option

—	None
D	DIN rail mounting (For manifold)
F	With bracket
N	Name plate

Note) When two or more symbols are specified, indicate them alphabetically.
Example) -DN

<Example>

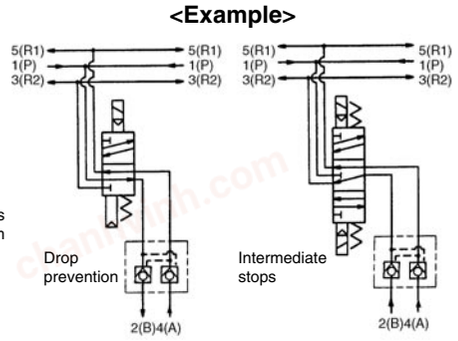

Manifold (DIN rail mounting)

VVQ2000-FPG- 06

Stations

01	1 station
⋮	⋮
16	16 stations

When ordering a double check block, order the DIN rail mounting [-D].

<Ordering Example>
VVQ2000-FPG-06···6-station manifold

- ✻VQ2000-FPG-C6C6-D, 3 sets
- ✻VQ2000-FPG-C8C8-D, 3 sets

} Double check block

Bracket Assembly

Part no.	Tightening torque
VQ2000-FPG-FB	0.8 to 1.0 N·m

⚠ Caution

- Air leakage from the pipe between the valve and cylinder or from the fittings will prevent the cylinder from stopping for long periods of time. Check the leakage using neutral household detergent, such as dish washing soap. Also check the cylinder's tube gasket, piston packing and rod packing for air leakage.
- Since one-touch fittings allow slight air leakage, screw piping is recommended when stopping the cylinder in the middle for long periods of time.
- Combining double check block with 3-position closed centre or pressure centre solenoid valve will not work.
- When fittings, etc. are being screwed to the double check block, tighten them with the torque below.

Connection threads	Proper tightening torque (N·m)
Rc 1/8	7 to 9
Rc 1/4	12 to 14

- If the exhaust of the double check block is restricted too much, the cylinder may not operate properly and may not stop intermediately.
- Set the cylinder load so that the cylinder pressure will be within two times that of the supply pressure.

chanhvinh.com

Series VQ2000

Manifold Option

Double check block (Direct mounting)
VVQ2000-23A-$^{B6}_{C8}$

It is mounted directly on the manifold to keep the cylinder in the intermediate position for a long time. Combining the double check block with a built-in pilot type double check valve and a 3-position exhaust centre solenoid valve will enable the cylinder to stop in the middle or maintain its position for long periods of time.
The combination with a 2-position single/double solenoid valve will permit this block to be used for preventing the dropping at the cylinder stroke end when the SUP residual pressure is released.

Specifications

Max. operating pressure	0.7 MPa
Min. operating pressure	0.15 MPa
Ambient and fluid temperature	–5 to 50°C
Flow characteristics: C	1.8 dm^3/(s·bar)
Max. operating frequency	180 c.p.m

<Check valve operation principle>

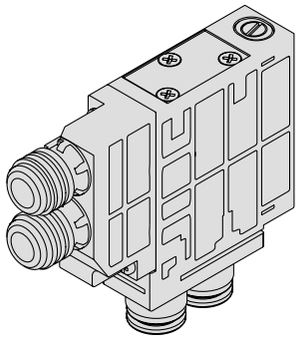

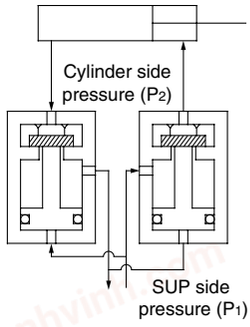

Dimensions

Single unit

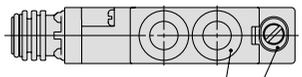

2 x port on the OUT side
C6: With ø6 one-touch fitting (for top ported)
C8: With ø8 one-touch fitting (for top ported)
B6: With ø6 one-touch fitting (for bottom ported)
B8: With ø8 one-touch fitting (for bottom ported)

Residual pressure release
Manual override

Colour: red

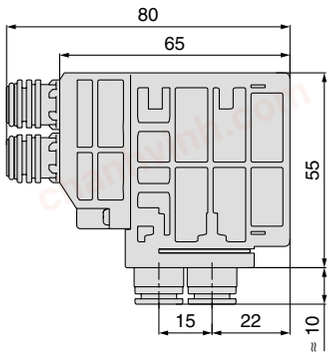

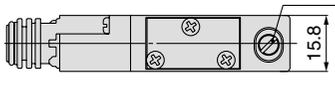

When the manifold is mounted.

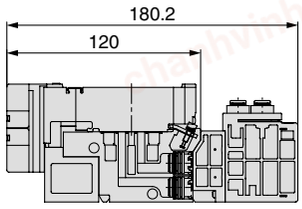

Top ported (VVQ2000-23A-C□)

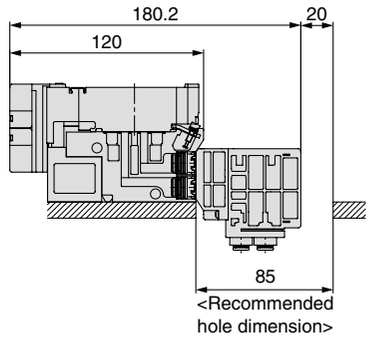

Bottom ported (VVQ2000-23A-B□)

⚠Caution

- Air leakage from the pipe between the valve and cylinder or from the fittings will prevent the cylinder from stopping for long periods of time. Check the leakage using neutral household detergent, such as dish washing soap.
  Also check the cylinder's tube gasket, piston packing and rod packing for air leakage.
- Since zero air leakage is not guaranteed, it is sometimes not possible to hold a stop position for long periods of time.
- Combining double check block with 3-position closed centre or pressure centre solenoid valve will not work.
- Set the cylinder load so that the cylinder pressure will be within two times that of the supply pressure.
- If the exhaust of the double check block is restricted too much, the cylinder may not operate properly and may not stop intermediately.

<Example>

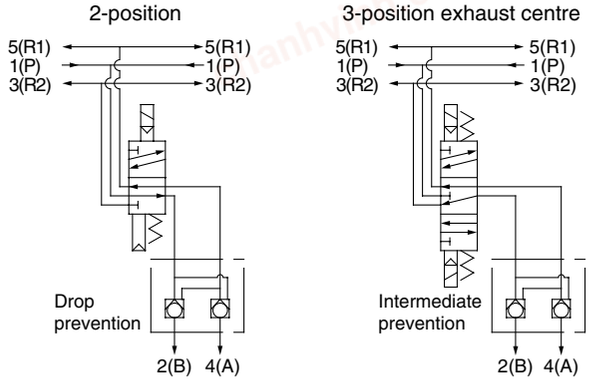

chanhvinh.com

Safety Instructions

These safety instructions are intended to prevent hazardous situations and/or equipment damage. These instructions indicate the level of potential hazard with the labels of **"Caution," "Warning"** or **"Danger."** They are all important notes for safety and must be followed in addition to International Standards (ISO/IEC)Note 1) and other safety regulations.

Note 1) ISO 4414: Pneumatic fluid power – General rules relating to systems.
ISO 4413: Hydraulic fluid power – General rules relating to systems.
IEC 60204-1: Safety of machinery – Electrical equipment of machines. (Part 1: General requirements)
ISO 10218: Manipulating industrial robots - Safety.
etc.

⚠ Caution: **Caution** indicates a hazard with a low level of risk which, if not avoided, could result in minor or moderate injury.

⚠ Warning: **Warning** indicates a hazard with a medium level of risk which, if not avoided, could result in death or serious injury.

⚠ Danger : **Danger** indicates a hazard with a high level of risk which, if not avoided, will result in death or serious injury.

⚠ Warning

1. **The compatibility of the product is the responsibility of the person who designs the equipment or decides its specifications.**
   Since the product specified here is used under various operating conditions, its compatibility with specific equipment must be decided by the person who designs the equipment or decides its specifications based on necessary analysis and test results. The expected performance and safety assurance of the equipment will be the responsibility of the person who has determined its compatibility with the product. This person should also continuously review all specifications of the product referring to its latest catalogue information, with a view to giving due consideration to any possibility of equipment failure when configuring the equipment.
2. **Only personnel with appropriate training should operate machinery and equipment.**
   The product specified here may become unsafe if handled incorrectly. The assembly, operation and maintenance of machines or equipment including our products must be performed by an operator who is appropriately trained and experienced.
3. **Do not service or attempt to remove product and machinery/equipment until safety is confirmed.**
   1. The inspection and maintenance of machinery/equipment should only be performed after measures to prevent falling or runaway of the driven objects have been confirmed.
   2. When the product is to be removed, confirm that the safety measures as mentioned above are implemented and the power from any appropriate source is cut, and read and understand the specific product precautions of all relevant products carefully.
   3. Before machinery/equipment is restarted, take measures to prevent unexpected operation and malfunction.
4. **Contact SMC beforehand and take special consideration of safety measures if the product is to be used in any of the following conditions.**
   1. Conditions and environments outside of the given specifications, or use outdoors or in a place exposed to direct sunlight.
   2. Installation on equipment in conjunction with atomic energy, railways, air navigation, space, shipping, vehicles, military, medical treatment, combustion and recreation, or equipment in contact with food and beverages, emergency stop circuits, clutch and brake circuits in press applications, safety equipment or other applications unsuitable for the standard specifications described in the product catalogue.
   3. An application which could have negative effects on people, property, or animals requiring special safety analysis.
   4. Use in an interlock circuit, which requires the provision of double interlock for possible failure by using a mechanical protective function, and periodical checks to confirm proper operation.

chanhvinh.com

Safety Instructions

⚠ Caution

1. The product is provided for use in manufacturing industries.

The product herein described is basically provided for peaceful use in manufacturing industries.

If considering using the product in other industries, consult SMC beforehand and exchange specifications or a contract if necessary.

If anything is unclear, contact your nearest sales branch.

Limited warranty and Disclaimer/Compliance Requirements

The product used is subject to the following “Limited warranty and Disclaimer” and “Compliance Requirements”.

Read and accept them before using the product.

Limited warranty and Disclaimer

1. **The warranty period of the product is 1 year in service or 1.5 years after the product is delivered.Note 2)**

   Also, the product may have specified durability, running distance or replacement parts. Please consult your nearest sales branch.
2. **For any failure or damage reported within the warranty period which is clearly our responsibility, a replacement product or necessary parts will be provided.**

   This limited warranty applies only to our product independently, and not to any other damage incurred due to the failure of the product.
3. **Prior to using SMC products, please read and understand the warranty terms and disclaimers noted in the specified catalogue for the particular products.**

Note 2) Vacuum pads are excluded from this 1 year warranty.

A vacuum pad is a consumable part, so it is warranted for a year after it is delivered.

Also, even within the warranty period, the wear of a product due to the use of the vacuum pad or failure due to the deterioration of rubber material are not covered by the limited warranty.

Compliance Requirements

1. **The use of SMC products with production equipment for the manufacture of weapons of mass destruction (WMD) or any other weapon is strictly prohibited.**

2. **The exports of SMC products or technology from one country to another are governed by the relevant security laws and regulations of the countries involved in the transaction. Prior to the shipment of a SMC product to another country, assure that all local rules governing that export are known and followed.**

chanhvinh.com

Series VQ1000/2000
Specific Product Precautions 1

Be sure to read before handling.
Refer to back pages 1 and 2 for Safety Instructions and Handling Precautions for SMC Products (M-E03-3) for 3/4/5 Port Solenoid Valves Precautions.

Light/Surge Voltage Suppressor

⚠Caution

The lighting positions are concentrated on one side for both single solenoid type and double solenoid type. In the double solenoid type, A side and B side energization are indicated by two colours which match the colours of the manual overrides.

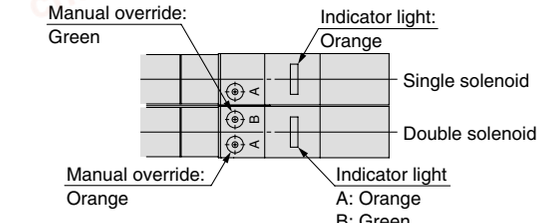

(Drawing shows a VQ1000 case.)

DC circuit diagram

Single solenoid

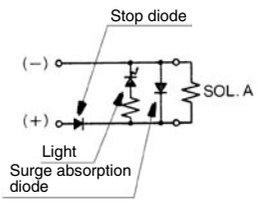

Double solenoid

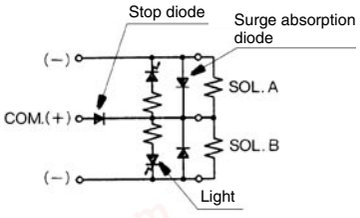

Note) A-side energization: A light (Orange) illuminates.
B-side energization: B light (Green) illuminates.
With wrong wiring prevention (stop diode) mechanism
With a surge absorption (surge absorption diode) mechanism

Manual Override

⚠Warning

Without an electric signal for the solenoid valve the manual override is used for switching the main valve. Push type is standard. (Tool required) Locking type is semi-standard. (Tool required/Manual)

■ Push type (Tool required)

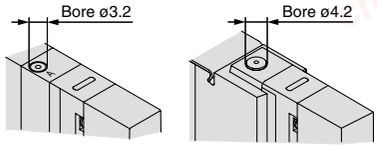

VQ1000 **VQ2000**

Push down on the manual override with a small screwdriver, etc. until it stops. Release the screwdriver and the manual override will return.

■ Locking type (Tool required) <Semi-standard>

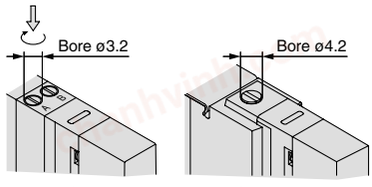

VQ1000 **VQ2000**

Push down on the manual override with a flat head screwdriver until it stops. Turn it clockwise by 90° to lock it. Turn it counterclockwise to release it.

■ Locking type (Manual) <Semi-standard>

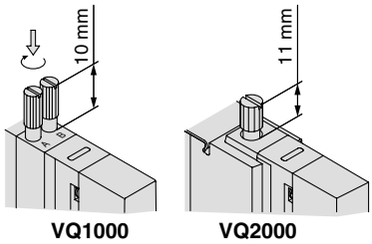

VQ1000 **VQ2000**

Push down on the manual override with a small flat head screwdriver or with your fingers until it stops. Turn it clockwise by 90° to lock it. Turn it counterclockwise to release it.

⚠Caution
Do not apply excessive torque when turning the locking type manual override. (0.1 N·m or less)

chanhvinh.com

Series VQ1000/2000
Specific Product Precautions 2

Be sure to read before handling.
Refer to back pages 1 and 2 for Safety Instructions and Handling Precautions for SMC Products (M-E03-3) for 3/4/5 Port Solenoid Valves Precautions.

Manual Override

⚠Warning

■ **Slide locking type (Manual) <Semi-standard>**

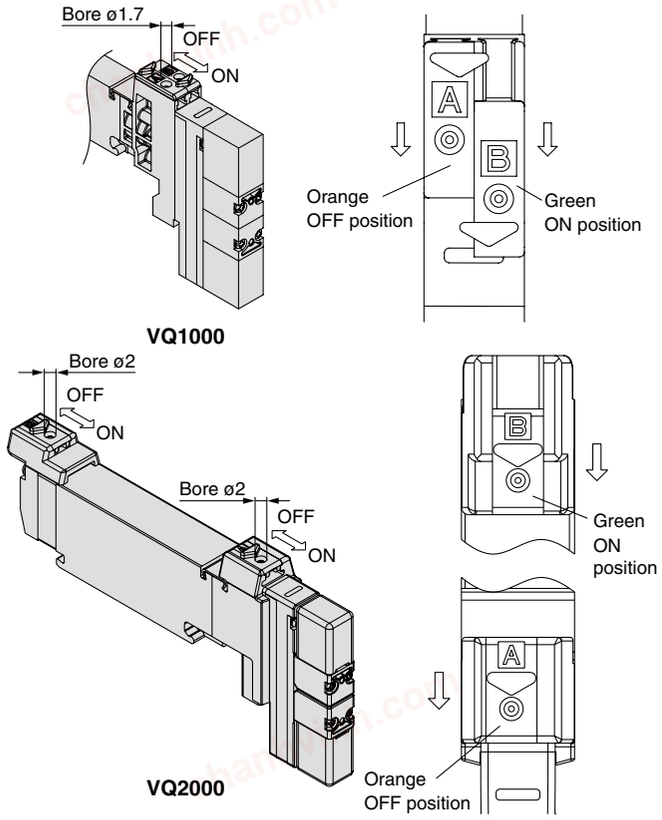

The manual override is locked by sliding it all the way to the pilot valve side (ON side) with a small flat head screwdriver or finger. Slide it to the fitting side (OFF side) to release it. In addition, it can also be used as a push type by using a screwdriver, etc., of ø1.7 or less. (ø2 or less for VQ2000).

How to Mount/Remove Solenoid Valves

⚠Caution

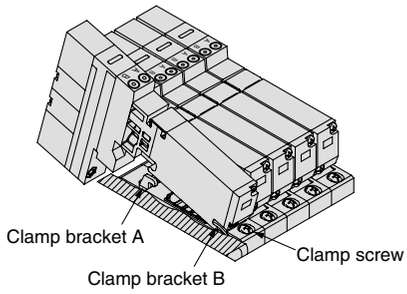

Removing

1. Loosen the clamp screw until it turns freely. (The screw is captive.)
2. Lift the coil side of the valve body while pressing down slightly on the screw head and remove it from the clamp bracket B. When the screw head cannot be pressed easily, gently press the area near the manual override of the valve.

How to Mount/Remove Solenoid Valves

⚠Caution

Mounting

1. Press down on the clamp screw. Clamp bracket A opens. Diagonally insert the hook on the valve end plate side into clamp B.
2. Press the valve body downward. (When the screw is released, it will be locked by clamp bracket A.)
3. Tighten the clamp screw. (Proper tightening torque: VQ1000, 0.25 to 0.35 N·m; VQ2000, 0.5 to 0.7 N·m.)

⚠Caution

Dust on the sealing surface of the gasket or solenoid valve can cause air leakage.

Replacement of Cylinder Port Fittings

⚠Caution

The cylinder port fittings are a cassette for easy replacement. The fittings are blocked by a clip. Take out the clip with a flat head screwdrier, etc., then replace the fittings.
For mounting, insert the fitting assembly until it strikes against the inside wall and then insert the clip to the specified position.

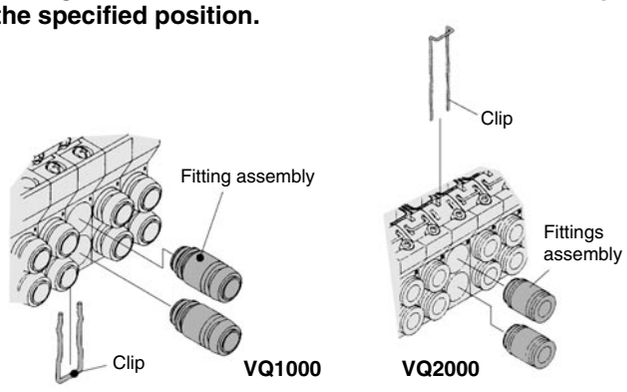

Applicable tubing O.D.	Fitting assembly part no.	
	VQ1000	**VQ2000**
Applicable tubing ø3.2	VVQ1000-50A-C3	—
Applicable tubing ø4	VVQ1000-50A-C4	VVQ1000-51A-C4
Applicable tubing ø6	VVQ1000-50A-C6	VVQ1000-51A-C6
Applicable tubing ø8	—	VVQ1000-51A-C8
M5	VVQ1000-50A-M5	—
Applicable tubing ø1/8"	VVQ1000-50A-N1	—
Applicable tubing ø5/32"	VVQ1000-50A-N3	VVQ1000-51A-N3
Applicable tubing ø1/4"	VVQ1000-50A-N7	VVQ1000-51A-N7
Applicable tubing ø5/16"	—	VVQ1000-51A-N9

Note) Refer to “Manifold Optional Parts” on pages 66, 67, 71 for other types of fittings.

⚠Caution

1. Use caution that O-rings must be free from scratches and dust. Otherwise, air leakage may result.
2. After screwing in the fittings, mount the M5 fitting assembly on the manifold base. (Tightening torque: 0.8 to 1.2 N·m)
3. Purchasing order is available in units of 10 pieces.

Back page 4

chanhvinh.com

Series VQ1000/2000
Specific Product Precautions 3

Be sure to read before handling.
Refer to back pages 1 and 2 for Safety Instructions and Handling Precautions for SMC Products (M-E03-3) for 3/4/5 Port Solenoid Valves Precautions.

How to Mount/Remove DIN Rail

⚠Caution

Removing

1. Loosen the clamp screw on side (a) of the end plate on both sides.
2. Lift side (a) of the manifold base and slide the end plate in the direction of (2) shown in the figure to remove.

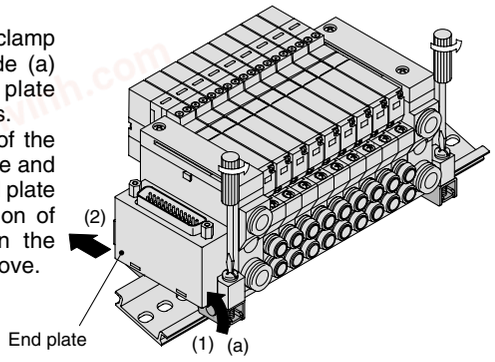

Mounting

1. Hook side (b) of the manifold base on the DIN rail.
2. Press down side (a) and mount the end plate on the DIN rail. Tighten the clamp screw on side (a) of the end plate. The proper tightening torque for screws is 0.4 to 0.6 N·m.

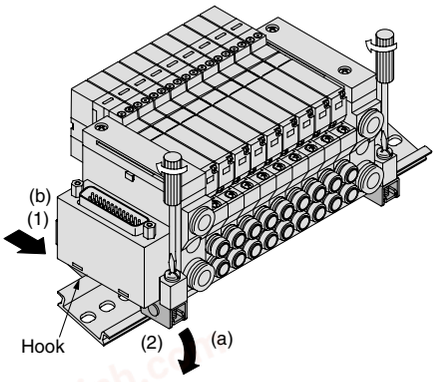

IP65 Enclosure

⚠Caution

Wiring connection for models conforming to IP65 should also have enclosures equivalent to or of stricter than IP65.

Built-in Silencer Element

⚠Caution

A filter element is incorporated in the end plate on both sides of the manifold base. A dirty and choked element may reduce cylinder speed or cause malfunction. Clean or replace the dirty element.

Element Part No.

Type	Element part no.	
	VQ1000	**VQ2000**
Built-in silencer, direct exhaust	VVQ1000-82A-1	VVQ2000-82A-1

The minimum order quantity is 10 pcs.

Remove the cover from the top of the end plate and remove the old element with a flat head screwdriver, etc.

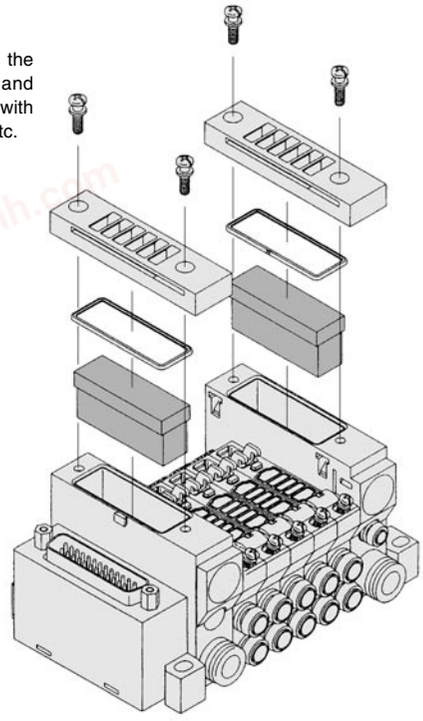

How to Calculate Flow Rate

Refer to Best Pneumatics No. ① for obtaining the flow rate.

chanhvinh.com

SMC

EUROPEAN SUBSIDIARIES:

Austria
SMC Pneumatik GmbH (Austria).
Girakstrasse 8, A-2100 Korneuburg
Phone: +43 2262-622800, Fax: +43 2262-62285
E-mail: office@smc.at
http://www.smc.at

Belgium
SMC Pneumatics N.V./S.A.
Nijverheidsstraat 20, B-2160 Wommelgem
Phone: +32 (0)3-355-1464, Fax: +32 (0)3-355-1466
E-mail: info@smcpneumatics.be
http://www.smcpneumatics.be

Bulgaria
SMC Industrial Automation Bulgaria EOOD
Business Park Sofia, Building 8 - 6th floor, BG-1715 Sofia
Phone:+359 2 9744492, Fax:+359 2 9744519
E-mail: office@smc.bg
http://www.smc.bg

Croatia
SMC Industrijska automatika d.o.o.
Crnomerec 12, HR-10000 ZAGREB
Phone: +385 1 377 66 74, Fax: +385 1 377 66 74
E-mail: office@smc.hr
http://www.smc.hr

Czech Republic
SMC Industrial Automation CZ s.r.o.
Hudcova 78a, CZ-61200 Brno
Phone: +420 5 414 24611, Fax: +420 5 412 18034
E-mail: office@smc.cz
http://www.smc.cz

Denmark
SMC Pneumatik A/S
Egeskovvej 1, DK-8700 Horsens
Phone: +45 70252900, Fax: +45 70252901
E-mail: smc@smcdk.com
http://www.smcdk.com

Estonia
SMC Pneumatics Estonia OÜ
Laki 12, 106 21 Tallinn
Phone: +372 6510370, Fax: +372 65110371
E-mail: smc@smcpneumatics.ee
http://www.smcpneumatics.ee

Finland
SMC Pneumatics Finland Oy
PL72, Tiistinniityntie 4, SF-02231 ESPOO
Phone: +358 207 513513, Fax: +358 207 513595
E-mail: smcfi@smc.fi
http://www.smc.fi

France
SMC Pneumatique, S.A.
1, Boulevard de Strasbourg, Parc Gustave Eiffel
Bussy Saint Georges F-77607 Marne La Vallee Cedex 3
Phone: +33 (0)1-6476 1000, Fax: +33 (0)1-6476 1010
E-mail: contact@smc-france.fr
http://www.smc-france.fr

Germany
SMC Pneumatik GmbH
Boschring 13-15, D-63329 Egelsbach
Phone: +49 (0)6103-4020, Fax: +49 (0)6103-402139
E-mail: info@smc-pneumatik.de
http://www.smc-pneumatik.de

Greece
SMC Hellas EPE
Anagenniseos 7-9 - P.C. 14342. N. Philadelphia, Athens
Phone: +30-210-2717265, Fax: +30-210-2717766
E-mail: sales@smchellas.gr
http://www.smchellas.gr

Hungary
SMC Hungary Ipari Automatizálási Kft.
Torbágy út 19, H-2045 Törökbálint
Phone: +36 23 511 390, Fax: +36 23 511 391
E-mail: office@smc.hu
http://www.smc.hu

Ireland
SMC Pneumatics (Ireland) Ltd.
2002 Citywest Business Campus, Naas Road, Saggart, Co. Dublin
Phone: +353 (0)1-403 9000, Fax: +353 (0)1-464-0500
E-mail: sales@smcpneumatics.ie
http://www.smcpneumatics.ie

Italy
SMC Italia S.p.A
Via Garibaldi 62, I-20061 Carugate, (Milano)
Phone: +39 (0)2-92711, Fax: +39 (0)2-9271365
E-mail: mailbox@smcitalia.it
http://www.smcitalia.it

Latvia
SMC Pneumatics Latvia SIA
Dzelzavas str. 120g, Riga LV-1021, LATVIA
Phone: +371 67817700, Fax: +371 67817701
E-mail: info@smclv.lv
http://www.smclv.lv

Lithuania
SMC Pneumatics Lietuva, UAB
Oslo g.1, LT-04123 Vilnius
Phone: +370 5 2308118, Fax: +370 5 2648126
E-mail: info@smclt.lt
http://www.smclt.lt

Netherlands
SMC Pneumatics BV
De Ruyterkade 120, NL-1011 AB Amsterdam
Phone: +31 (0)20-5318888, Fax: +31 (0)20-5318880
E-mail: info@smcpneumatics.nl
http://www.smcpneumatics.nl

Norway
SMC Pneumatics Norway A/S
Vollsveien 13 C, Granfos Næringspark N-1366 Lysaker
Tel: +47 67 12 90 20, Fax: +47 67 12 90 21
E-mail: post@smc-norge.no
http://www.smc-norge.no

Poland
SMC Industrial Automation Polska Sp.z.o.o.
ul. Poloneza 89, PL-02-826 Warszawa,
Phone: +48 22 211 9600, Fax: +48 22 211 9617
E-mail: office@smc.pl
http://www.smc.pl

Portugal
SMC Sucursal Portugal, S.A.
Rua de Engº Ferreira Dias 452, 4100-246 Porto
Phone: +351 226 166 570, Fax: +351 226 166 589
E-mail: postpt@smc.smces.es
http://www.smc.eu

Romania
SMC Romania srl
Str Frunzei 29, Sector 2, Bucharest
Phone: +40 213205111, Fax: +40 213261489
E-mail: smcromania@smcromania.ro
http://www.smcromania.ro

Russia
SMC Pneumatik LLC.
4B Sverdlovskaja nab, St. Petersburg 195009
Phone.:+7 812 718 5445, Fax:+7 812 718 5449
E-mail: info@smc-pneumatik.ru
http://www.smc-pneumatik.ru

Slovakia
SMC Priemyselná Automatizáciá, s.r.o.
Fatranská 1223, 01301 Teplicka Nad Váhom
Phone: +421 41 3213212 - 6 Fax: +421 41 3213210
E-mail: office@smc.sk
http://www.smc.sk

Slovenia
SMC industrijska Avtomatika d.o.o.
Mirnska cesta 7, SI-8210 Trebnje
Phone: +386 7 3885412 Fax: +386 7 3885435
E-mail: office@smc.si
http://www.smc.si

Spain
SMC España, S.A.
Zuazobidea 14, 01015 Vitoria
Phone: +34 945-184 100, Fax: +34 945-184 124
E-mail: post@smc.smces.es
http://www.smc.eu

Sweden
SMC Pneumatics Sweden AB
Ekhagsvägen 29-31, S-141 71 Huddinge
Phone: +46 (0)8-603 12 00, Fax: +46 (0)8-603 12 90
E-mail: post@smcpneumatics.se
http://www.smc.nu

Switzerland
SMC Pneumatik AG
Dorfstrasse 7, CH-8484 Weisslingen
Phone: +41 (0)52-396-3131, Fax: +41 (0)52-396-3191
E-mail: info@smc.ch
http://www.smc.ch

Turkey
Entek Pnömatik San. ve Tic. A*.
Perpa Ticaret Merkezi B Blok Kat:11 No: 1625, TR-34386, Okmeydani, Istanbul
Phone: +90 (0)212-444-0762, Fax: +90 (0)212-221-1519
E-mail: smc@entek.com.tr
http://www.entek.com.tr

UK
SMC Pneumatics (UK) Ltd
Vincent Avenue, Crownhill, Milton Keynes, MK8 0AN
Phone: +44 (0)845 121 5122 Fax: +44 (0)1908-555064
E-mail: sales@smcpneumatics.co.uk
http://www.smcpneumatics.co.uk

OTHER SUBSIDIARIES WORLDWIDE:

ARGENTINA, AUSTRALIA, BOLIVIA, BRASIL, CANADA, CHILE, CHINA, HONG KONG, INDIA, INDONESIA, MALAYSIA, MEXICO, NEW ZEALAND, PHILIPPINES, SINGAPORE, SOUTH KOREA, TAIWAN, THAILAND, USA, VENEZUELA

http://www.smc.eu
http://www.smcworld.com

SMC CORPORATION Akihabara UDX 15F, 4-14-1, Sotokanda, Chiyoda-ku, Tokyo 101-0021, JAPAN Phone: 03-5207-8249 FAX: 03-5298-5362

1st printing OP printing OP 00 Printed in Spain

Specifications are subject to change without prior notice
and any obligation on the part of the manufacturer.