chanhvinh.com

For Dry Air, Pilot Operated

# 2 Port Solenoid Valve

# *Series VQ20/30*

## Compact & lightweight with large flow capacity

| | Weight (g) | Effective area ($mm^2$) |
|---|---|---|
| **VQ20** | 46 | 9 (N$\ell$/min 491) |
| **VQ30** | 80 | 17.5 (N$\ell$/min 981) |

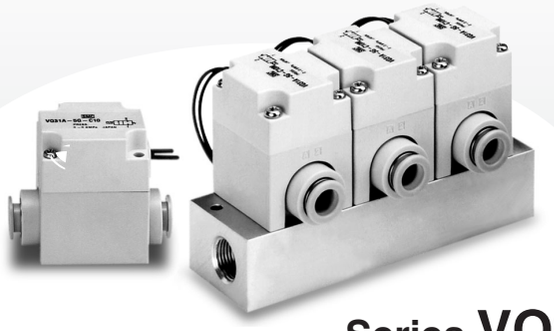

Series **VQ30**

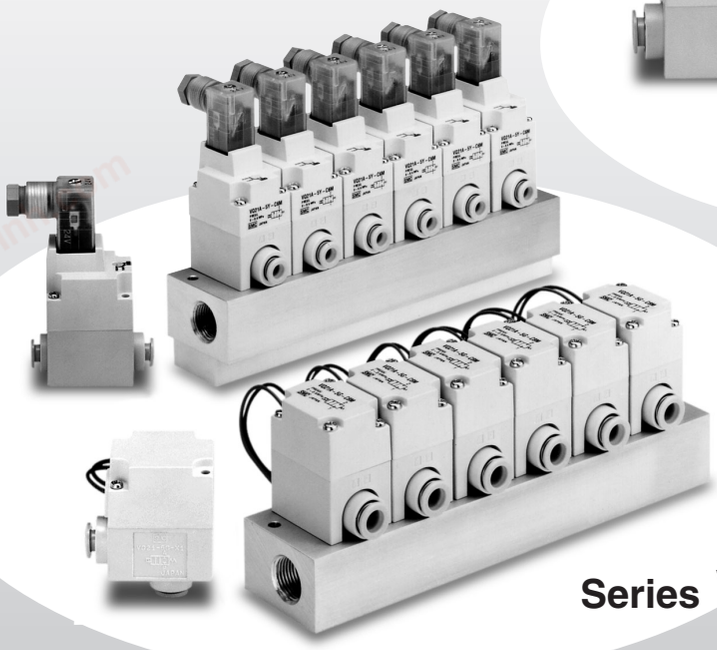

Series **VQ20**

## High frequency operation possible and long operating life

**High speed response 7ms or less (VQ20), 20ms or less (VQ30)**
(Without indicator light and surge voltage suppressor, at 0.5MPa of supply pressure)

## Easy piping with built-in One-touch fittings

## Dust and jet proof enclosure (IP65) available with DIN connector

## Applications: Air-blow, Blow-off of work piece, etc.

chanhvinh.com

# Series VQ20/30

## ⚠ Precautions

**Be sure to read before handling. Refer to p.0-33 to 0-36 for Safety Instructions and common precautions.**

## ⚠ Warning

### Selection

**1. Air quality**

This product is for dry air. Drain, oil, etc. in the air may result in faulty operation. Use clean (dry) air.

**2. Pressure differential**

If a restrictor (nozzle, etc.) is mounted on the outlet side, the outlet side pressure differential at the inlet side is smaller. Be sure the pressure differential when ON does not drop below 0.01 MPa.

## ⚠ Warning

### Manual Override

**Regardless of electric signals to the solenoid valve, the manual override is used for switching the main valve. (DIN connector only.)**

**Locking slotted style**

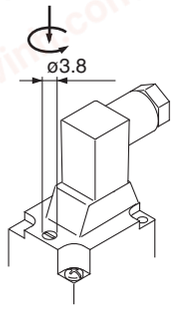


Push the manual override button with a small screw driver until it stops. Turn it in the counter-clockwise direction at 90°, and it is locked. Turn it right to release.

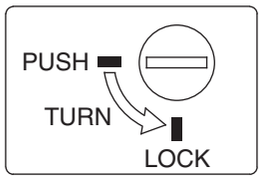


## ⚠ Caution

### Connection and Electrical Circuit

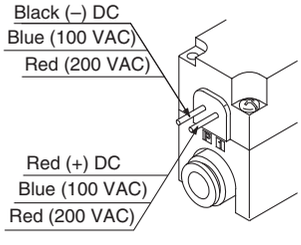


**With DC voltage power-saving circuit (with polarity)**

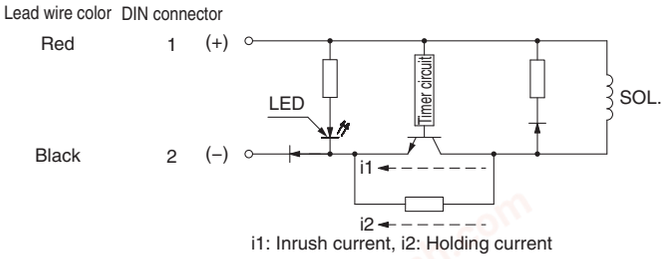


i1: Inrush current, i2: Holding current

DC (with power-saving circuit) specifications is designed to reduce the power consumption at holding to achieve power-saving by circuit shown above.
Refer to below power wave form.

## ⚠ Caution

### Connection and Electrical Circuit

**Power wave form of power-saving type (Rated voltage at 24 VDC)**

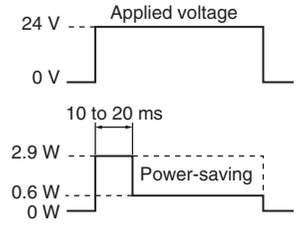


**AC circuit**

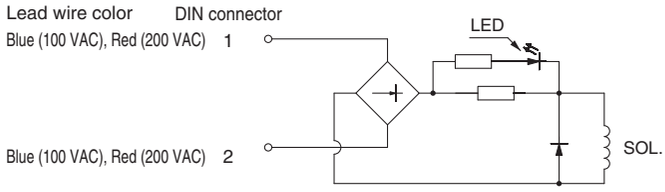


## ⚠ Caution

### Valve Mounting

When mounting the valve, secure with brackets. When mounting it directly, tighten the mounting screws with the appropriate torque (0.7 to 0.8 N·m).

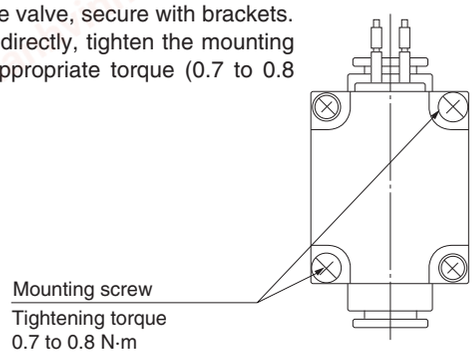


## ⚠ Caution

### When Energizing Continuously for Long Period of Time

When energizing continuously, choose the option of an energy-saving circuit specifications. High speed response type (with no energy-saving circuit) cannot be energized continuously.

chanhvinh.com



## How to Wire DIN Terminal

### ⚠ Caution

**ISO#: Based on DIN 43650C (Pin gap 8 mm)**
**Connection**

1. Loosen the tightening screw and pull the connector off of the solenoid valve.
2. After removing the tightening screw, divide the terminal block and housing by prying open the slot area of the lower part of the terminal block open with a screwdriver.
3. Loosen the terminal screws of the block and insert stripped lead wires in accordance with the wiring diagram. Secure each wire by re-tightening the terminal screw (In the case of terminal 1: (+), 2: (-) DC)
4. Tighten the ground nut to secure the cable wire.

**Change of electrical entry**

Wire entry can be changed by mounting the housing in either direction (four directions at every 90°) after dividing the terminal block and the housing.

∗ For the indicator lighted type, be careful not to damage the light with the lead wire of the cable.

**Precautions**

Insert a connector straight or pull it out straight, using caution it does not be tilted.

**Applicable cable**

Cord O.D.: ø3.5 to ø7
(Reference) 0.5 mm² 2-core and 3-core wire equivalent to JIS C 3306.

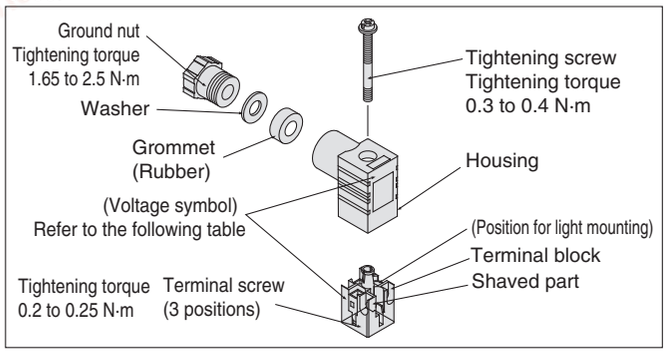


### DIN (EN175301-803) Terminal

This DIN terminal corresponds to the Form C DIN connector with an 8 mm terminal pitch, which complies with EN175301-803B.

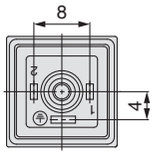


## DIN Terminal Part No. (Based on DIN)

| | |
|---|---|
| Without indicator light | SY100-82-4 |

**With Indicator Light**

| Rated voltage | Voltage symbol | Part no. |
|---|---|---|
| 24 VDC | 24 V | SY100-82-3-05 |
| 12 VDC | 12 V | SY100-82-3-06 |
| 100 VAC | 100 V | SY100-82-2-01 |
| 200 VAC | 200 V | SY100-82-2-02 |
| 110 VAC | 110 V | SY100-82-2-03 |
| 220 VAC | 220 V | SY100-82-2-04 |

## How to Wire DIN Terminal

### DIN Terminal Circuit with Indicator Light

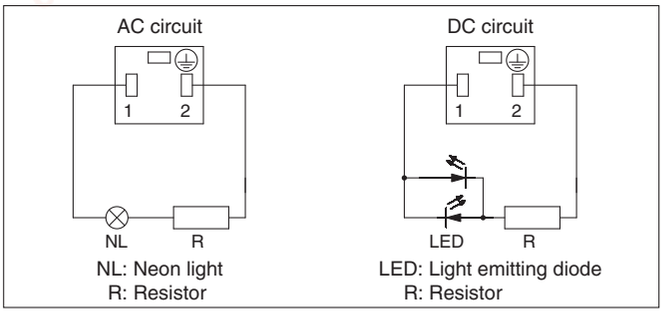


## Manifold

## How to Mount/Remove from DIN Rail

### ⚠ Caution

**Removing procedure**

1. Loosen the clamp screw on the " A " side of both ends of the manifold.
2. Lift the " A " side of the manifold off the DIN rail and slide it in the direction of the arrow.

**Mounting procedure**

1. Hook the mounting hook on the " B " side of the manifold base to the DIN rail.
2. Press down side " A " and mount the end plate on the DIN rail. Tighten the clamp screw on side " B " of the end plate.

(Tightening torque: 0.3 to 0.4 N·m).

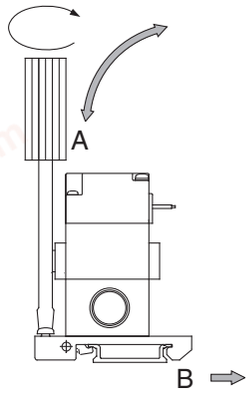


## Valve Mounting

### ⚠ Caution

**After confirming the gasket is correctly placed under the valve, tighten the mounting screws with the appropriate torque (0.7 to 0.8 N·m).**

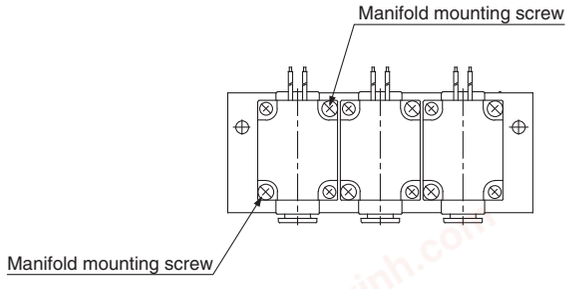

chanhvinh.com

For Dry Air, Pilot Operated

# 2 Port Solenoid Valve
# Series VQ20/30
## Single Unit

## How to Order Valve

VQ **2** **1** **A** 1 – **1** **G** □ □ – **C6** □ □ – **Q**

**Series/ Orifice diameter**

| Symbol | Series |
|---|---|
| 2 | VQ20 |
| 3 | VQ30 |

**Valve type**

| | |
|---|---|
| 1 | N.C. (2 (OUT) → 1 (IN)) |

When the valve is closed, flow is blocked from port 1 to port 2. However, if the pressure in port 2 is higher than port 1, the valve will not be able to block the fluid and it will flow from port 2 to port 1.

**Body style**

| | |
|---|---|
| **A**: Single unit | 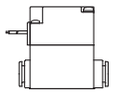 |
| **M**: For manifold | 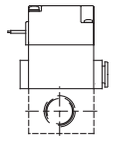 |

**Coil voltage**

| | |
|---|---|
| 1 | 100 VAC (50/60 Hz) |
| 2 | 200 VAC (50/60 Hz) |
| 3 | 110 VAC (50/60 Hz) |
| 4 | 220 VAC (50/60 Hz) |
| 5 | 24 VDC |
| 6 | 12 VDC |
| 9 Note 1) | Other special voltage |

Note 1) Please consult with SMC for special voltages.
Note 2) There is polarity for DC voltage (with power-saving circuit type).

**Electrical entry**

| | |
|---|---|
| **G**: Grommet | 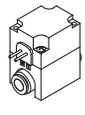 |
| **Y**: DIN connector | 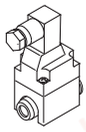 |
| **YO**: DIN terminal without connector | 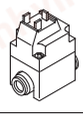 |

**Manual override**

| | |
|---|---|
| — | None |
| B(1) | Locking style (Slotted) |

Note 1) Only normally closed DIN connector in-line style is possible.

**Option**

| | |
|---|---|
| —: None | |
| **F**: With bracket | 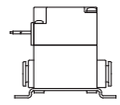 |
| **L**: L style (VQ20 Only ) | 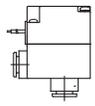 |

Note) If ordering both options, indicate "LF".

**Port size**

| Symbol | Port size | VQ20 | VQ30 |
|---|---|---|---|
| C6 | One-touch fitting for ø6 | ○ | — |
| C8 | One-touch fitting for ø8 | ○ | — |
| C10 | One-touch fitting for ø10 | — | ○ |
| C12 | One-touch fitting for ø12 | — | ○ |

**Made to order specifications**
Refer to table below

**Electricity circuit**

| Symbol | DC voltage | AC voltage |
|---|---|---|
| — | With power-saving circuit (With surge voltage suppressor protection circuit) | With full wave rectifier circuit (With surge voltage suppressor protection circuit) |
| Z | With power-saving circuit (With light/surge voltage suppressor protection circuit) | With full wave rectifier circuit (With light/surge voltage suppressor protection circuit) |
| H Note) | High speed response type (Without energy-saving, light/surge voltage suppressor circuit) | |

Note) H is available only for DC voltage and cannot be energized continuously.

## Made to Order Specifications

Please contact SMC for further specifications, delivery and price

**Oil-free specifications**

VQ 2/3 1 A/M 1 – □□□ – □□□ – □ – X2-Q

Note) Please consult with SMC when using. Not available for manual operation

**Seal material fluororubber specifications**

VQ 2/3 1 A/M 1 – □□□□ – □□□ – □ – X5-Q

**Seal material fluororubber/oil-free specifications**

VQ 2/3 1 A/M 1 – □□□ – □□□ – □ – X23-Q

Note) Not available for manual operation

chanhvinh.com






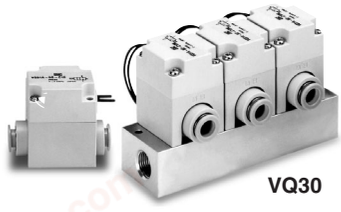


## Standard Specifications

| | | | | |
|---|---|---|---|---|
| Valve specifications | Series | | VQ20 | VQ30 |
| | Valve construction | | 2 port poppet pilot operated | |
| | Fluid | | Air/Inert gas Note 1) | |
| | Ambient and fluid temperature | | –10 to 50°C Note 2) | |
| | Lubrication | | Not required | |
| | Manual override | | Slotted locking type (tool required) Note 3) | |
| | Impact resistance/Vibration resistance | | 150/30 m/s² Note 4) | |
| | Enclosure | | Dustproof Note 5) | |
| | Internal leakage cm³/min | | 15 or less | |
| | Exterior leakage cm³/min | | 15 or less | |
| | Mounting orientation | | Unrestricted | |
| | Weight | | 46 g | 80 g |
| Electric specifications | Coil rated voltage | | 12 VDC, 24 VDC, 100 VAC, 110 VAC, 200 VAC, 220 VAC | |
| | Allowable voltage fluctuation | | ±10% of rated voltage | |
| | Coil insulation type | | Class B or equivalent | |
| | Power consumption (Current value) | DC voltage (with power-saving circuit) | Inrush: 2.9 W, Holding: 0.6 W | |
| | | DC voltage (without power-saving circuit) | 2.9 W | |
| | | AC | 2 VA | |
| | Electrical entry | | Grommet, DIN terminal | |

Note 1) This product is for dry air. Use in clean air, and be sure that drain and oil content does not flow into the product.
Note 2) Use dry air to prevent condensation when operating at low temperatures.
Note 3) Manual override is available only for DIN terminal type.
Note 4) Vibration resistance: No malfunction occurred in a one-sweep test between 8.3 and 2000 Hz. Test was performed at both energized and de-energized states to the axis and right angle directions of the main valve and armature (value at the initial state).
Impact resistance: No malfunction resulted from the impact test using a drop impact tester. The test was performed on the axis and right angle directions of the main valve and armature for both energized and de-energized states (value at the initial state).
Note 5) DIN terminal type: Applicable to dusttight and low jetproof (IP65).

### Symbol

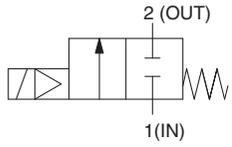


N.C.

When the valve is closed, flow is blocked from port 1 to port 2. However, if the pressure in port 2 is higher than port 1, the valve will not be able to block the fluid and it will flow from port 2 to port 1.

## Characteristic Specifications

| Series | | VQ20 | | VQ30 | |
|---|---|---|---|---|---|
| Flow characteristics | Port size | ø6 | ø8 | ø10 | ø12 |
| | C [dm³/(s·bar)] | 1.4 | 1.5 | 2.8 | 3.0 |
| | b | 0.23 | 0.42 | 0.42 | 0.37 |
| | Cv | 0.33 | 0.39 | 0.80 | 0.81 |
| Min. operating pressure differential | | 0.01 MPa Note 3) | | | |
| Max. operating pressure differential | | 0.6 MPa | | 0.5 MPa | |
| Response time Note 1) | Electricity circuit | With power-saving circuit | High speed response type Note 2) | With power-saving circuit | High speed response type Note 2) |
| | ON | 10 ms or less | 7 ms or less | 25 ms or less | 20 ms or less |
| | OFF | 15 ms or less | 5 ms or less | 15 ms or less | 5 ms or less |

Note 1) JIS B 8375 (value of DC voltage specifications at 0.5 MPa supply pressure)
(Value of high response time is subject to change upon pressure, quality of air.)
Note 2) It cannot be used when energized continuously.
Note 3) If a restrictor (nozzle, etc.) is mounted on the outlet side piping, the pressure differential when ON is smaller. Be sure that the pressure differential does not drop below 0.01 MPa. Additionally, take great care when used for the ejector supply, etc.

## Construction

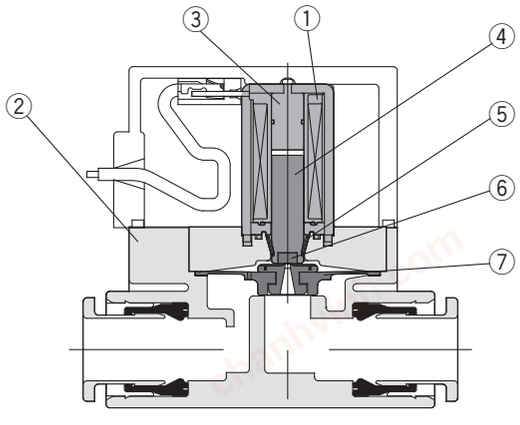


### Component Parts

| No. | Description | Material |
|---|---|---|
| ① | Solenoid coil | — |
| ② | Body | Resin |
| ③ | Fixed armature | Stainless Steel |
| ④ | Armature | Stainless Steel |
| ⑤ | Return spring | Stainless Steel |
| ⑥ | Poppet | NBR |
| ⑦ | Diaphragm assembly | H NBR, Resin |

chanhvinh.com



## Dimensions/Series VQ20

### In-line Type/Grommet(G)

**VQ21A1-□G□-□-□Q**

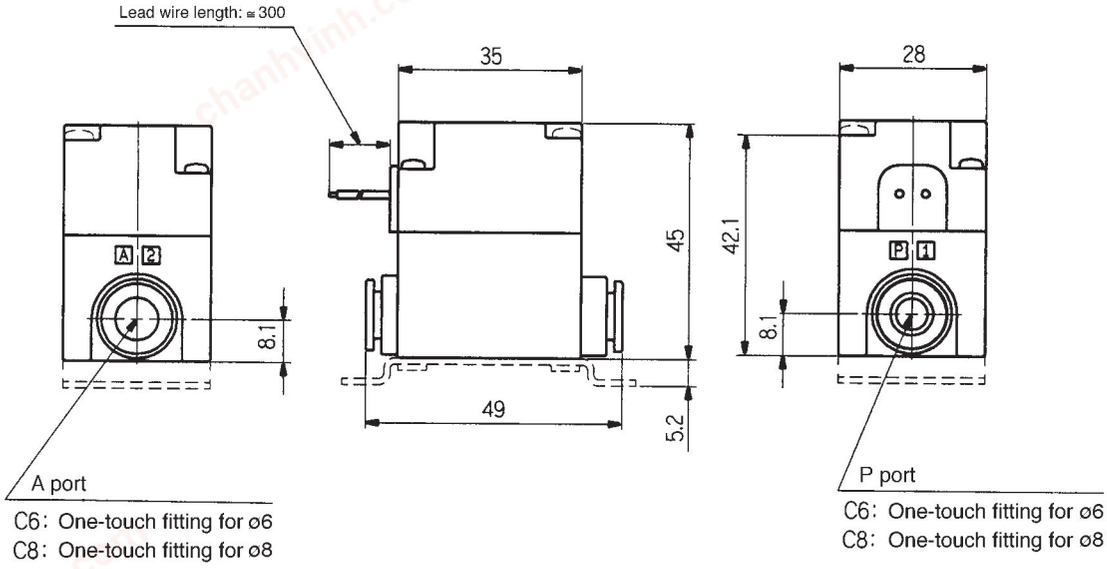


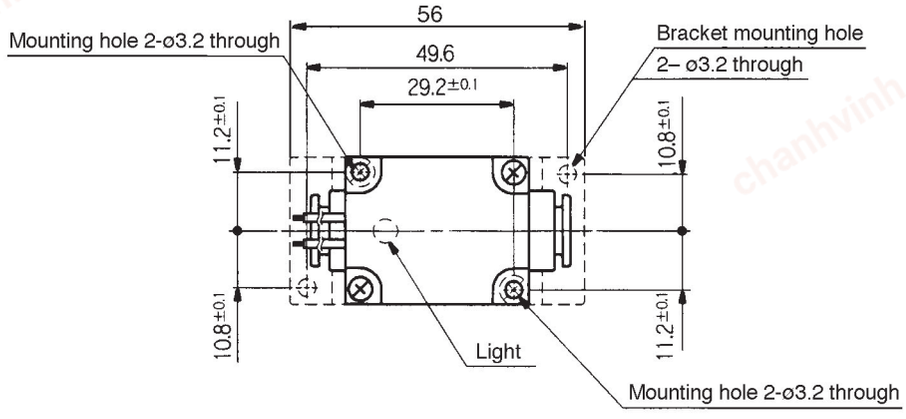


Dotted line: Bracket mounting style (-F)

chanhvinh.com



## Dimensions/Series VQ20

### L Type/Grommet (G)

**VQ21A1-□G□-□-L□-Q**

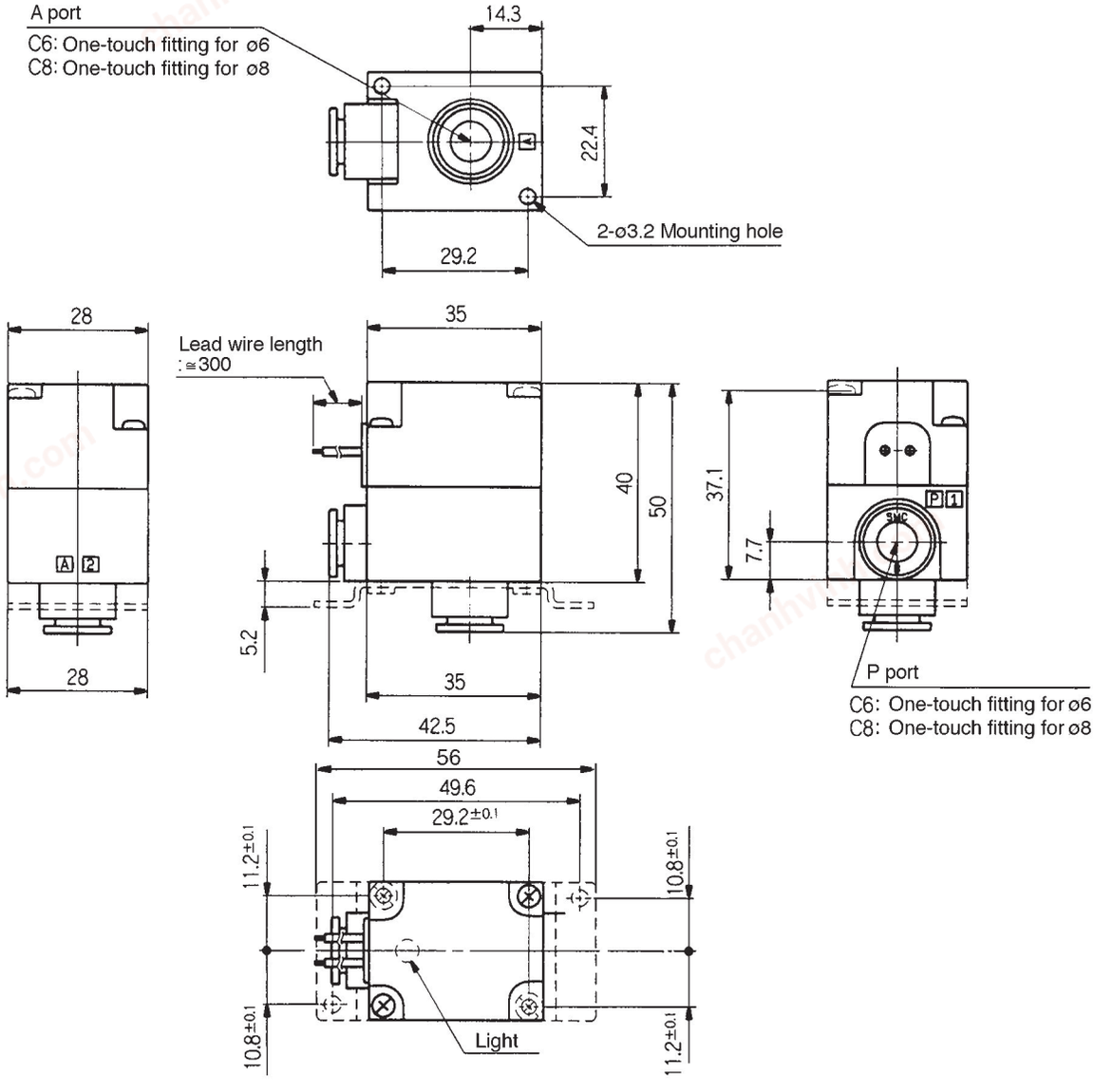


Dotted line: Bracket mounting style (-LF)

chanhvinh.com



## Dimensions/Series VQ20

### In-line/DIN connector (Y)

**VQ21A1-□Y□□-□-□-Q**

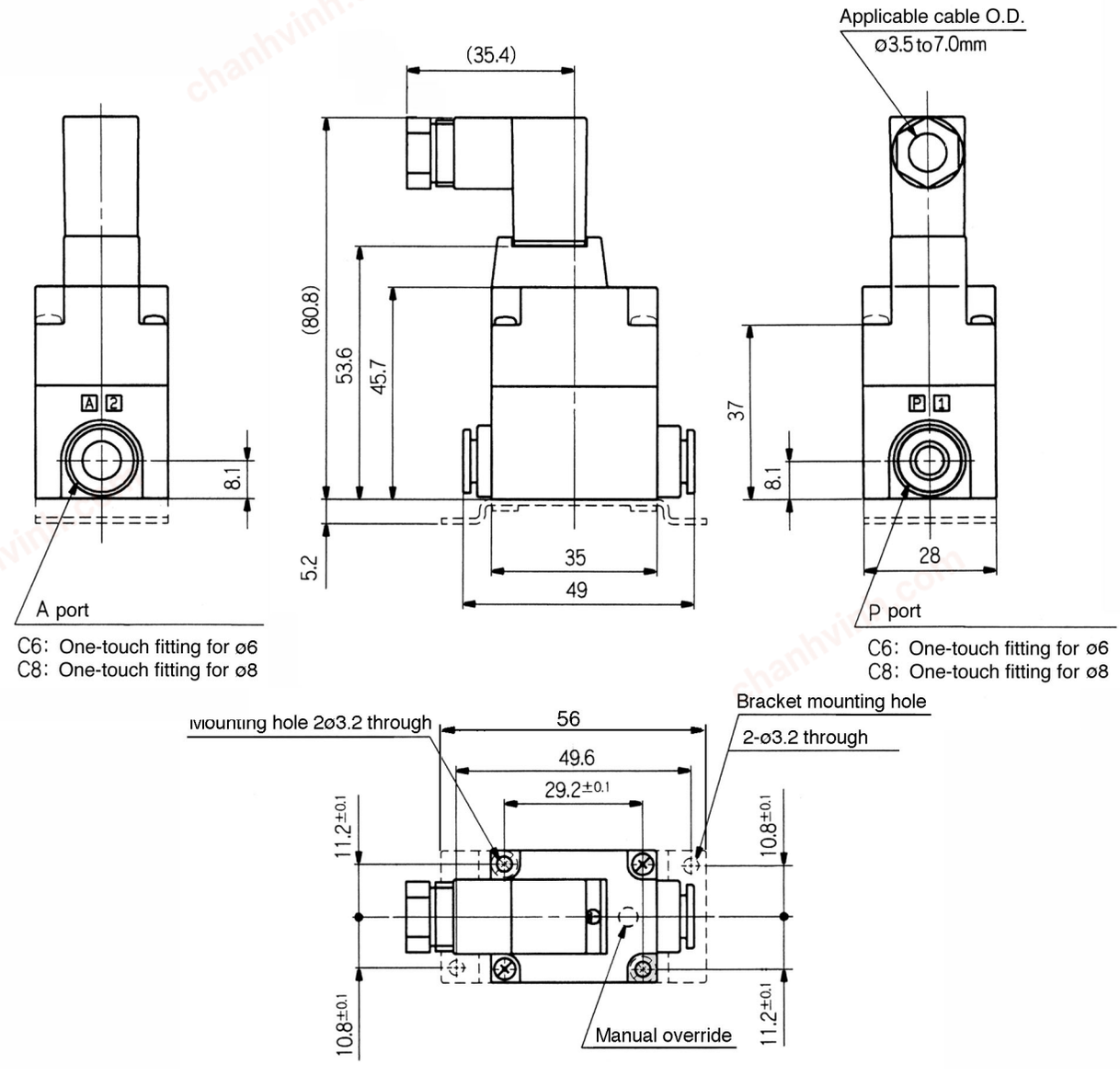


Dotted line: Bracket mounting style (-F)

chanhvinh.com



## Dimensions/Series VQ30

### In-line/Grommet (G)

**VQ31A1-□G□-□-□-Q**

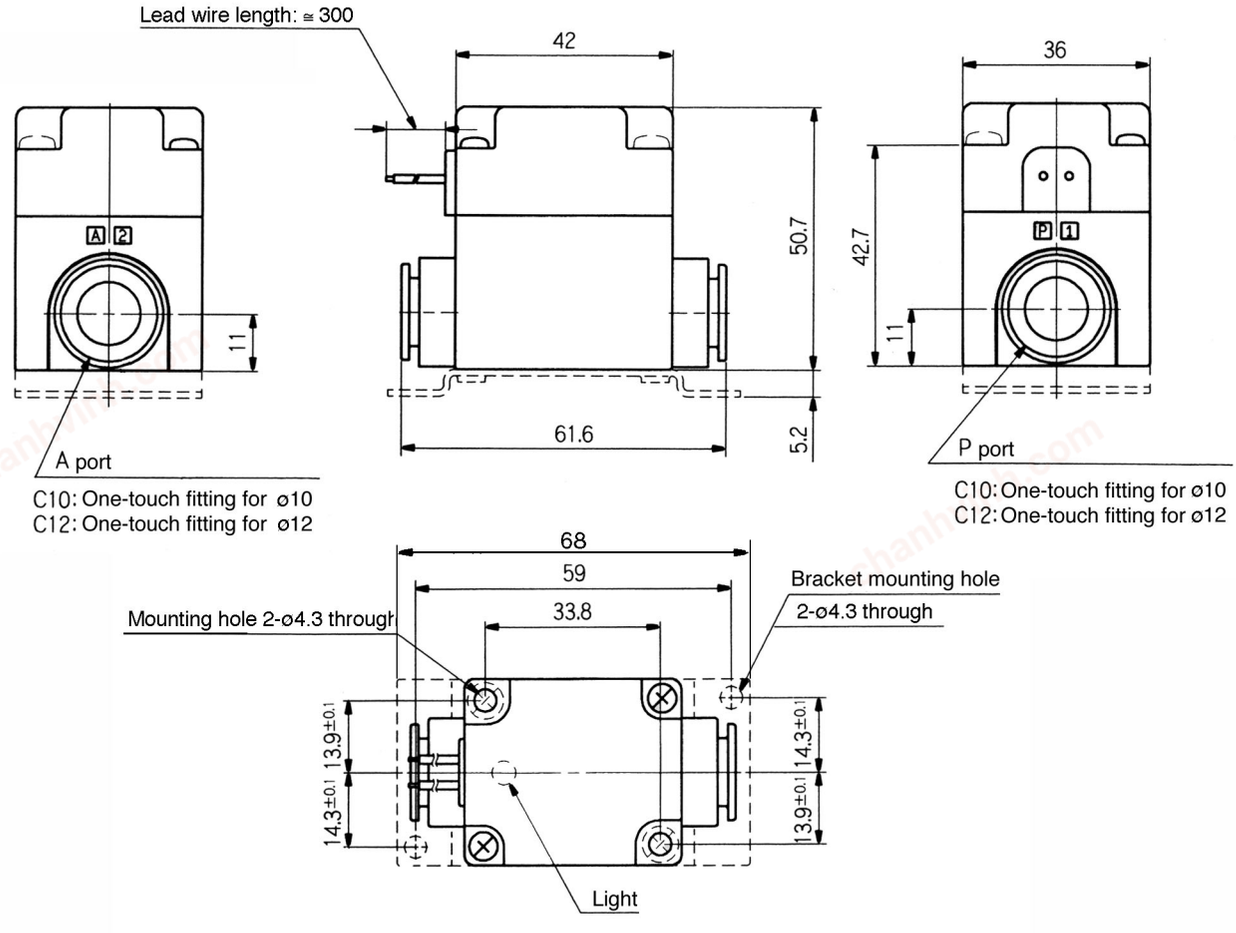


Dotted line: Bracket mounting style (-F)

chanhvinh.com



## Dimensions/Series VQ30

### DIN connector (Y)

**VQ31A1-□Y□□-□-□-Q**

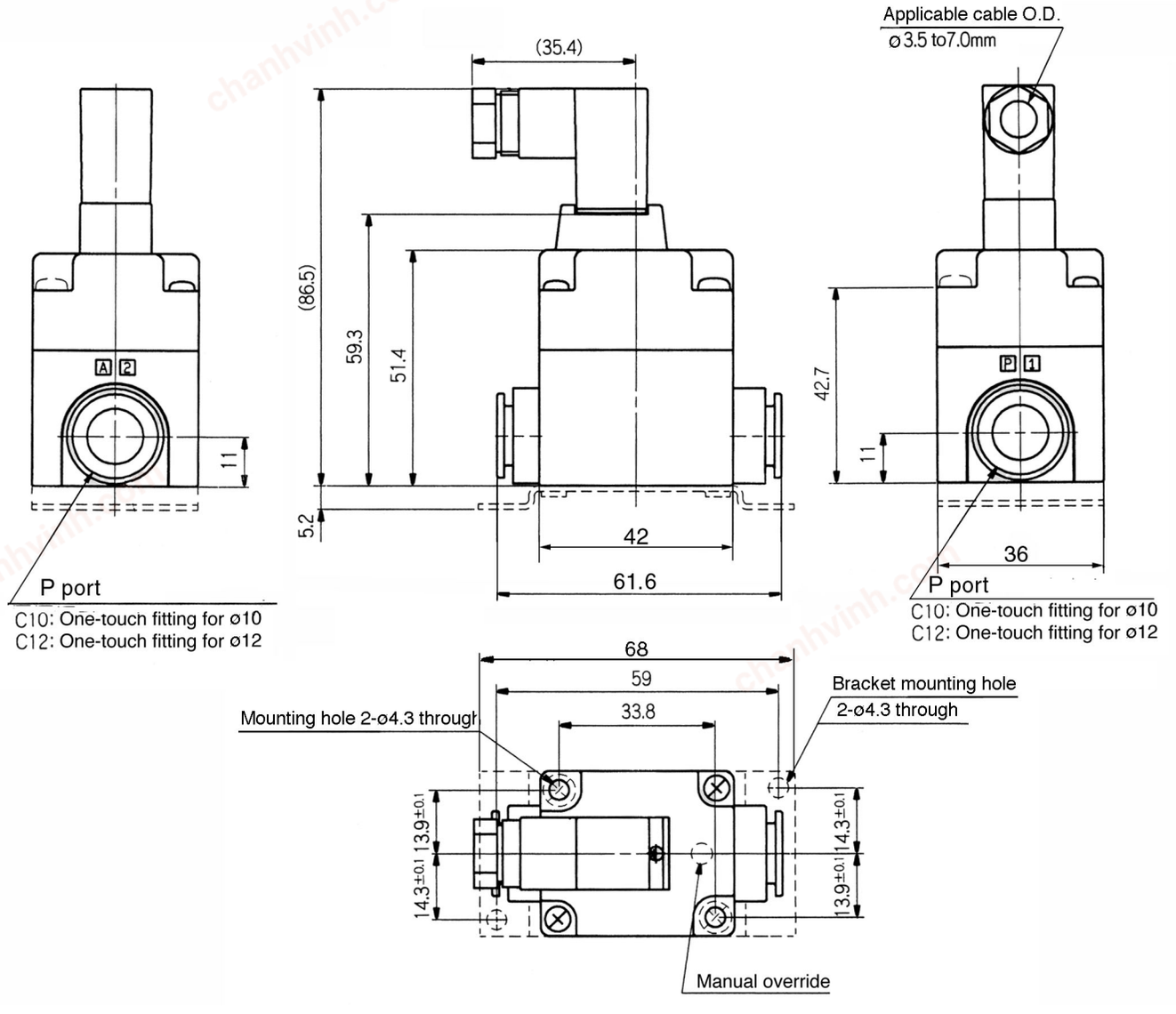


Dotted line: Bracket mounting style (-F)

chanhvinh.com



## How to Order Manifold

**VV2Q 2 2 – 08 – □ – □ – Q**

**Series**

| | |
|---|---|
| 2 | VQ20 |
| 3 | VQ30 |

**Stations**

| | |
|---|---|
| 02 | 2 stations |
| : | : |
| 20 | 20 stations |

**Option**

| | |
|---|---|
| — | None |
| D | DIN rail mounting |
| DO | DIN rail mounting (Without DIN rail) |

**P port/Thread**

| | |
|---|---|
| — | Rc3/8 |
| 00N | NPT3/8 |
| 00T | NPTF3/8 |
| 00F | G3/8 |

### How to Order Manifold Assembly

List valve and option part numbers under the manifold base part number.

**<Example>**

VV2Q22-05-Q ····· 1 set — Manifold part No.
VQ21M1-5G-C6-Q ····· 4 sets — Valve part No. (Stations 1 to 4)
VQ21M1-5G-C8-Q ····· 1 set — Valve part No. (Station 5)

Write sequentially from the 1st station on the D side

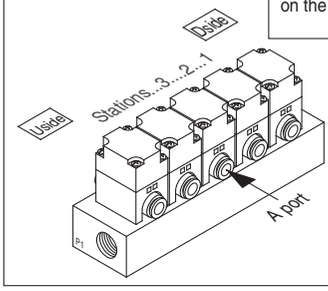


## How to Order Valve

**VQ 2 1 M 1 – 1 G □ □ – C6 – □ – Q**

**Series/ Orifice diameter**

| Symbol | Series |
|---|---|
| 2 | VQ20 |
| 3 | VQ30 |

**Valve Type**

| | |
|---|---|
| 1 | 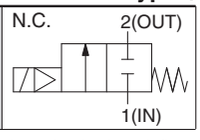 |



When the valve is closed, flow is blocked from port 1 to port 2. However, if the pressure in port 2 is higher than port 1, the valve will not be able to block the fluid and it will flow from port 2 to port 1.

**Valve specification**

| | |
|---|---|
| M | Manifold |

**Coil voltage**

| | |
|---|---|
| 1 | 100 VAC (50/60 Hz) |
| 2 | 200 VAC (50/60 Hz) |
| 3 | 110 VAC (50/60 Hz) |
| 4 | 220 VAC (50/60 Hz) |
| 5 | 24 VDC |
| 6 | 12 VDC |
| 9 Note 1) | Other special voltage |

Note 1) Please consult with SMC for special voltages.
Note 2) There is polarity for DC voltage (with power-saving circuit type).

**Electrical entry**

| | |
|---|---|
| G | Grommet |
| Y | DIN connector |
| YO | DIN terminal (Without connector) |

**Electricity circuit**

| Symbol | DC voltage | AC voltage |
|---|---|---|
| — | With power-saving circuit (With surge voltage suppressor protection circuit) | With full wave rectifier circuit (With surge voltage suppressor protection circuit) |
| Z | With power-saving circuit (With light/surge voltage suppressor protection circuit) | With full wave rectifier circuit (With light/surge voltage suppressor protection circuit) |
| H Note) | High speed response type (Without energy-saving, light/surge voltage suppressor circuit) | |

Note) H is available only for DC voltage and cannot be energized continuously.

**Manual override**

| | |
|---|---|
| — | None |
| B (1) | Locking style (Slotted style) |

Note 1) Only normally closed DIN connector in-line style is applicable.

**Port size**

| Symbol | Port size | VQ20 | VQ30 |
|---|---|---|---|
| C6 | One-touch fitting for ø6 | ○ | — |
| C8 | One-touch fitting for ø8 | ○ | — |
| C10 | One-touch fitting for ø10 | — | ○ |
| C12 | One-touch fitting for ø12 | — | ○ |

**Made to order specifications**
Refer to table below

## Made to Order Specifications

Please contact SMC for further specifications, delivery and price

**Oil-free specifications**

**VQ $^{2}_{3}$1$^{A}_{M}$1–□□□–□□–□–X2-Q**

Note) Please consult with SMC when using.
Not available for manual operation

**Seal material fluororubber specifications**

**VQ $^{2}_{3}$1$^{A}_{M}$1–□□□□–□□–□–X5-Q**

chanhvinh.com



## Dimensions

### Plug lead unit manifold (VV2Q22-□-Q)

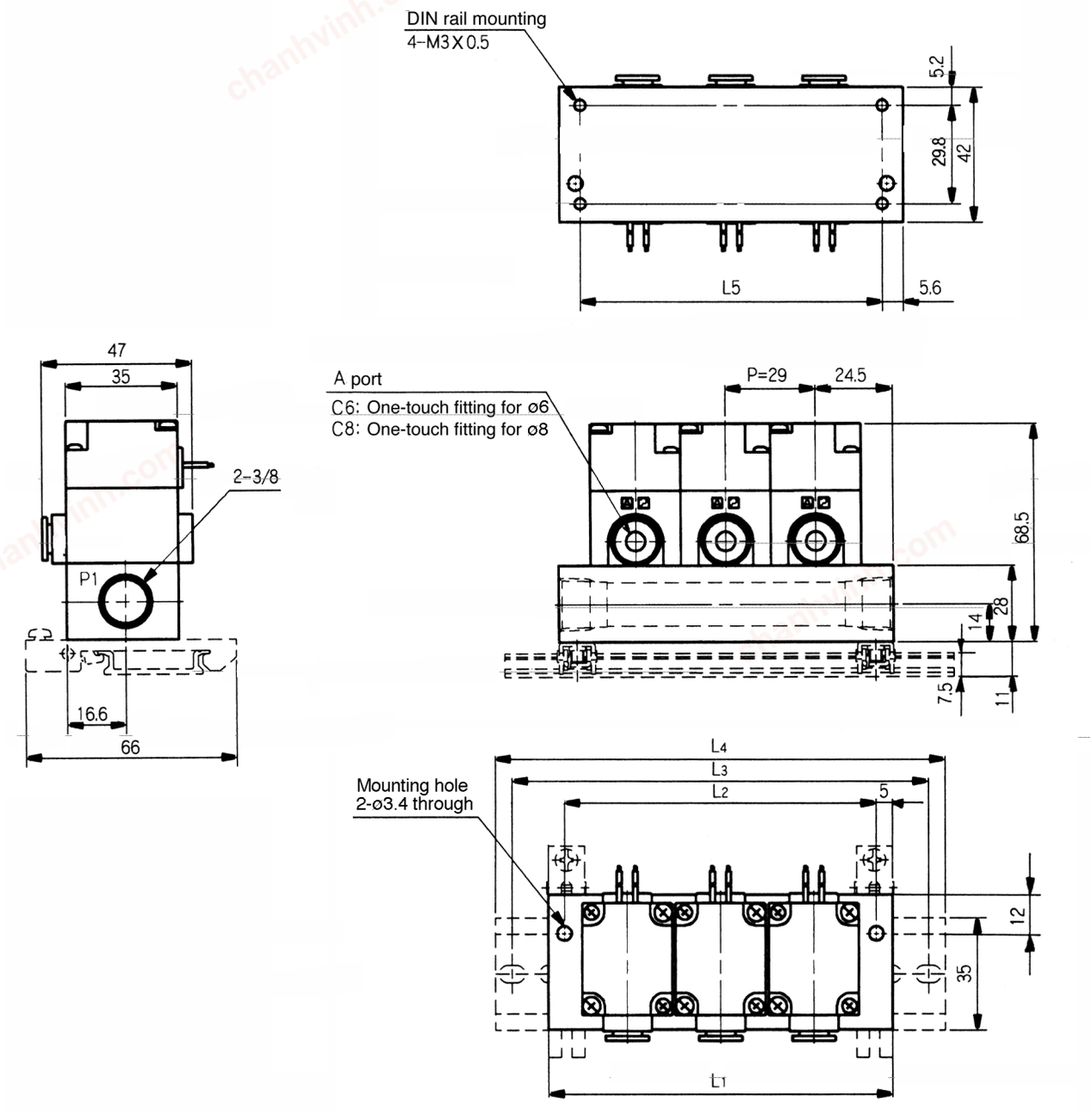


Dotted line: DIN rail mounting (-D)

Equation
$L_1 = (n-1) \times 29 + 49$
$L_2 = L_1 - 10$
$L_3 = L_4 - 10.5$
$L_5 = L_1 - 11.2$

**Dimensions** n: Station (Max.20)

| L \ n | 1 | 2 | 3 | 4 | 5 | 6 | 7 | 8 | 9 | 10 | 11 | 12 | 13 | 14 | 15 | 16 | 17 | 18 | 19 | 20 |
|---|---|---|---|---|---|---|---|---|---|---|---|---|---|---|---|---|---|---|---|---|
| $L_1$ | 49 | 78 | 107 | 136 | 165 | 194 | 223 | 252 | 281 | 310 | 339 | 368 | 397 | 426 | 455 | 484 | 513 | 542 | 571 | 600 |
| $L_2$ | 39 | 68 | 97 | 126 | 155 | 184 | 213 | 242 | 271 | 300 | 329 | 358 | 387 | 416 | 445 | 474 | 503 | 532 | 561 | 590 |
| $L_3$ | 75 | 100 | 137.5 | 162.5 | 187.5 | 212.5 | 250 | 275 | 300 | 337.5 | 362.5 | 387.5 | 425 | 450 | 475 | 500 | 537.5 | 562.5 | 587.5 | 625 |
| $L_4$ | 85.5 | 110.5 | 148 | 173 | 198 | 223 | 260.5 | 285.5 | 310.5 | 348 | 373 | 398 | 435.5 | 460.5 | 485.5 | 510.5 | 548 | 573 | 598 | 635.5 |
| $L_5$ | 37.8 | 66.8 | 95.8 | 124.8 | 153.8 | 182.8 | 211.8 | 240.8 | 269.8 | 298.8 | 327.8 | 356.8 | 385.8 | 414.8 | 443.8 | 472.8 | 501.8 | 530.8 | 559.8 | 588.8 |

chanhvinh.com



## Dimensions

### Plug lead unit manifold (VV2Q32-□-Q)

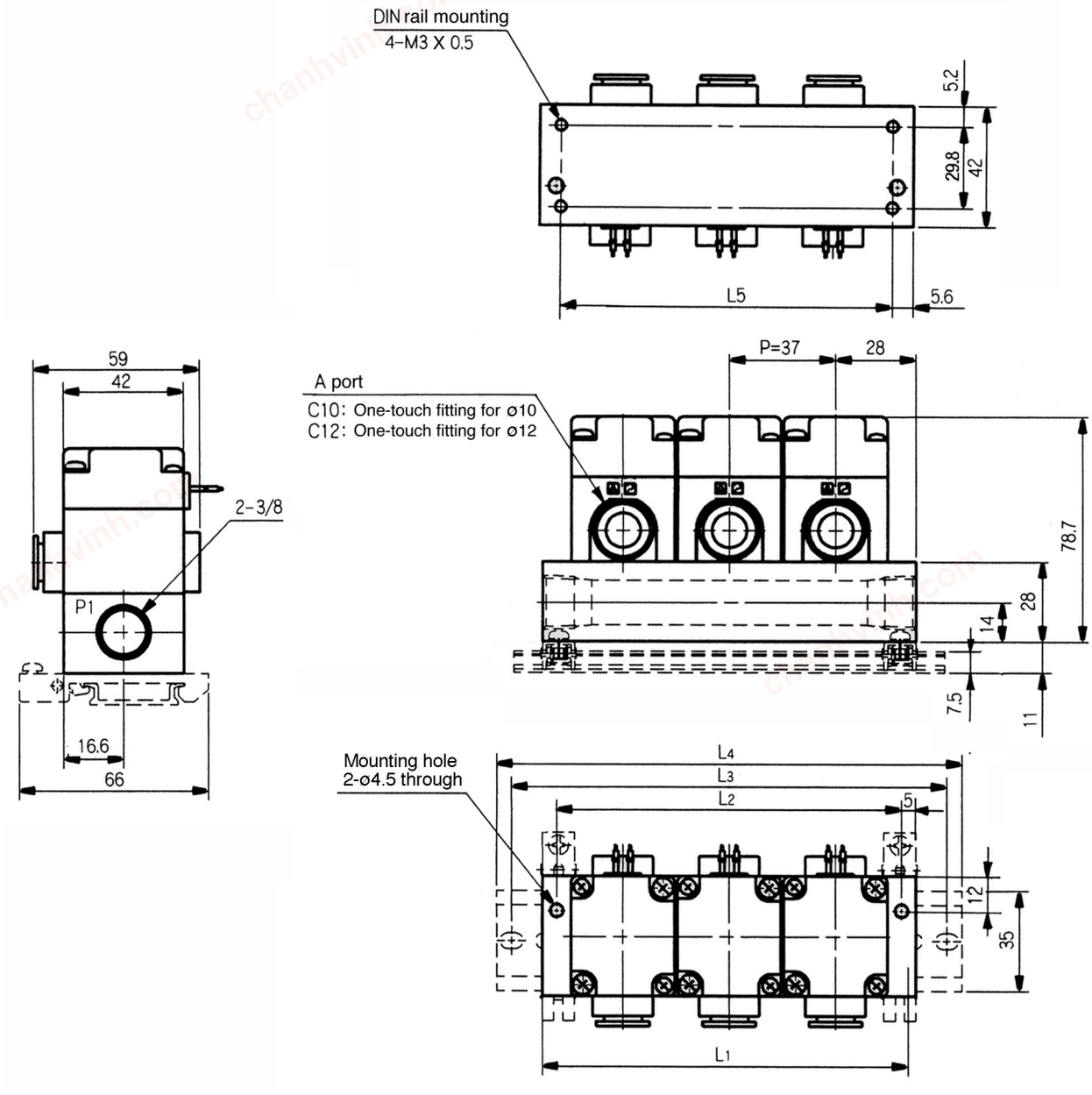


Dotted line: DIN rail mounting (-D)

Equation
$L_1 = (n-1) \times 37 + 56$
$L_2 = L_1 - 10$
$L_3 = L_4 - 10.5$
$L_5 = L_1 - 11.2$

**Dimensions**

n: Station (Max. 20)

| L \ n | 1 | 2 | 3 | 4 | 5 | 6 | 7 | 8 | 9 | 10 | 11 | 12 | 13 | 14 | 15 | 16 | 17 | 18 | 19 | 20 |
|---|---|---|---|---|---|---|---|---|---|---|---|---|---|---|---|---|---|---|---|---|
| $L_1$ | 56 | 93 | 130 | 167 | 204 | 241 | 278 | 315 | 352 | 389 | 426 | 463 | 500 | 537 | 574 | 611 | 648 | 685 | 722 | 759 |
| $L_2$ | 46 | 83 | 120 | 157 | 194 | 231 | 268 | 305 | 342 | 379 | 416 | 453 | 490 | 527 | 564 | 601 | 638 | 675 | 712 | 749 |
| $L_3$ | 75 | 112.5 | 150 | 187.5 | 225 | 261.5 | 300 | 337.5 | 375 | 412.5 | 450 | 487.5 | 525 | 562.5 | 587.5 | 625 | 662.5 | 700 | 737.5 | 775 |
| $L_4$ | 85.5 | 123 | 160.5 | 198 | 235.5 | 273 | 310.5 | 348 | 385.5 | 423 | 460.5 | 498 | 535.5 | 573 | 598 | 635.5 | 673 | 710.5 | 748 | 785.5 |
| $L_5$ | 44.8 | 81.8 | 118.8 | 155.8 | 192.8 | 229.8 | 266.8 | 303.8 | 340.8 | 377.8 | 414.8 | 451.8 | 488.8 | 525.8 | 562.8 | 599.8 | 636.8 | 673.8 | 710.8 | 747.8 |

chanhvinh.com

# Series VQ20/30

## Single Unit Option

### Bracket assembly (with 2 mounting screws)

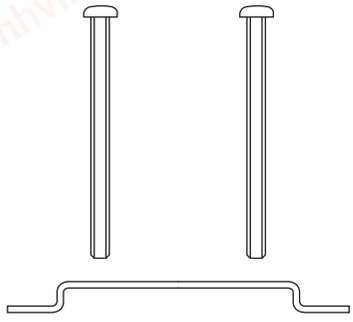

| Type | Bracket assembly | (Mounting screws, 2 pcs.) |
|---|---|---|
| VQ20 Grommet in-line type | AXT835-13A | M3 x 45 |
| VQ20 Grommet L type, DIN terminal type | AXT835-13A-2 | M3 x 40 |
| DIN terminal L type | AXT835-13A-3 | M3 x 35 |
| VQ30 | AXT837-13A | M4 x 45 |

## Manifold Option

### DIN rail
### AXT100-DR-□

* Suffix the number from DIN rail dimensions table below. Refer to the dimension drawing for each manifold for L dimension.

Each manifold can be mounted on a DIN rail.
Order with the option symbol "-D" to specify DIN rail mounting style.
The DIN rail is approximately 30 mm longer than the length of manifold.

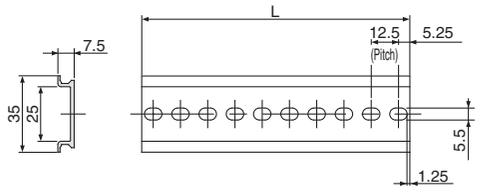


**L dimension**

**• Series VQ20**

| Stations | 1 | 2 | 3 | 4 | 5 | 6 | 7 | 8 | 9 | 10 | 11 | 12 | 13 | 14 | 15 | 16 | 17 | 18 | 19 | 20 |
|---|---|---|---|---|---|---|---|---|---|---|---|---|---|---|---|---|---|---|---|---|
| No. | 6 | 8 | 11 | 13 | 15 | 17 | 20 | 22 | 24 | 27 | 29 | 31 | 34 | 36 | 38 | 40 | 43 | 45 | 47 | 50 |
| L | 85.5 | 110.5 | 148 | 173 | 198 | 223 | 260.5 | 285.5 | 310.5 | 348 | 373 | 398 | 435.5 | 460.5 | 485.5 | 510.5 | 548 | 573 | 598 | 635.5 |

**• Series VQ30**

| Stations | 1 | 2 | 3 | 4 | 5 | 6 | 7 | 8 | 9 | 10 | 11 | 12 | 13 | 14 | 15 | 16 | 17 | 18 | 19 | 20 |
|---|---|---|---|---|---|---|---|---|---|---|---|---|---|---|---|---|---|---|---|---|
| No. | 6 | 9 | 12 | 15 | 18 | 21 | 24 | 27 | 30 | 33 | 36 | 39 | 42 | 45 | 47 | 50 | 53 | 56 | 59 | 62 |
| L | 85.5 | 123 | 160.5 | 198 | 235.5 | 273 | 310.5 | 348 | 385.5 | 423 | 460.5 | 498 | 535.5 | 573 | 598 | 635.5 | 673 | 710.5 | 748 | 785.5 |

### DIN rail mounting bracket
### VVQZ100-DB-5

This bracket is used for mounting the manifold on the DIN rail. DIN rail mounting bracket is attached on the manifold.
1 set of DIN rail mounting brackets for 1 manifold includes 2 brackets.

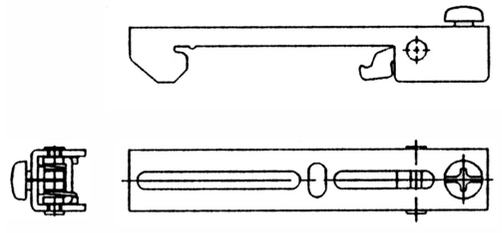

### Blanking plate assembly (with O-ring and 2 mounting screws)

Mount a blank plate on valve manifold when a valve is disassembled for maintenance purposes, or when spare valve unit is supposed to be mounted in the future.

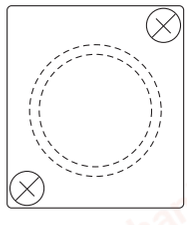

| Series | Blanking plate assembly | (O-ring) | (Mounting screws, 2 pcs.) |
|---|---|---|---|
| **VQ20** | AXT835-35A | OR-1679-100-H | M3 x 6 |
| **VQ30** | AXT837-35A | OR-2400-150-H | M4 x 6 |