chanhvinh.com

2-Colour Display

Digital Flow Switch

(Only 200 L type)

RoHS

Applicable fluid Dry air, N_2

New

3-Screen Display

Digital Flow Monitor

Allows for the monitoring of remote lines

PFG300 Series p. 24



Wide range of flow measurement with one product

Flow ratio[*1] **100 : 1**

*1 Rated flow ratio is 10 : 1 for the current PF2A.

Smallest settable increment: 1 l/min

Current PF2A: 5 l/min (200 L: 2 l/min)

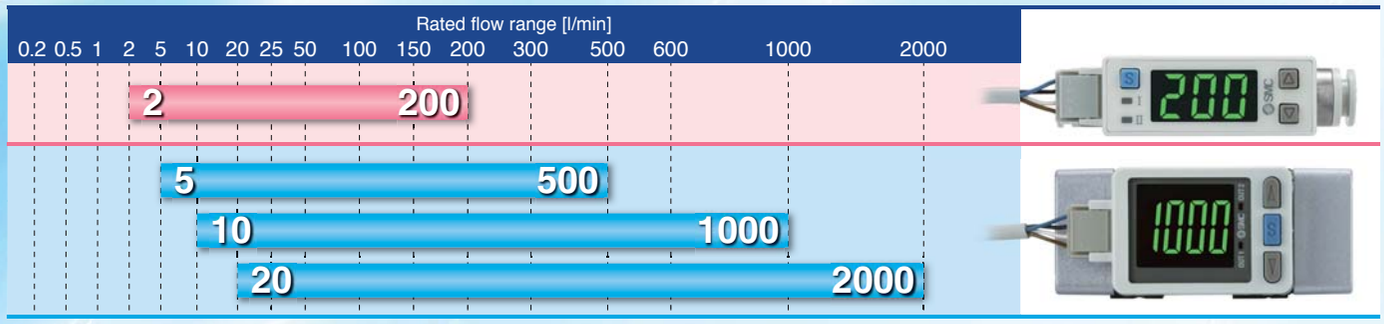

Compact, Space saving

Compared with the current PF2A

Weight Approx. **76 % reduction**

290 g ➡ **70 g**

Mounting space Approx. **81 % reduction**

200 L type



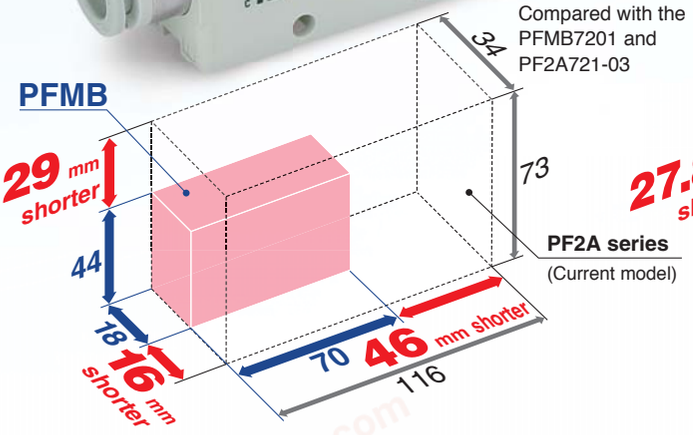

Compared with the current PF2A

Weight Approx. **66 % reduction**

290 g ➡ **100 g**

Mounting space Approx. **67 % reduction**

500 L/1000 L/ 2000 L type



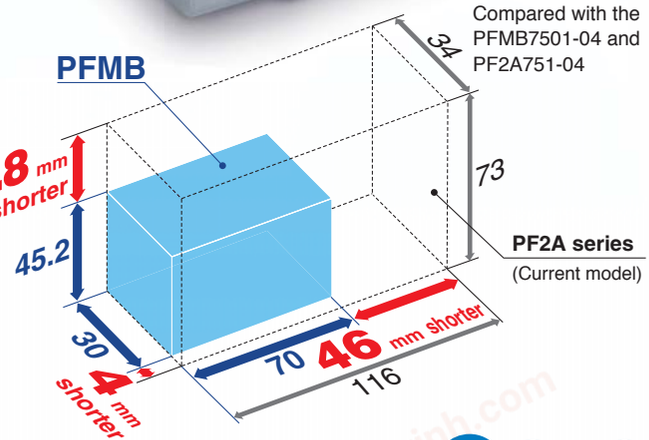

PFMB Series

SMC

CAT.EUS100-95C-UK

chanhvinh.com

PFMB Series

2-Colour Display Digital Flow Switch

Flow adjustment valve is integrated.

200 L type

Reduces piping installation work and space requirements. Special design provides smooth adjustment to match needle rotations.

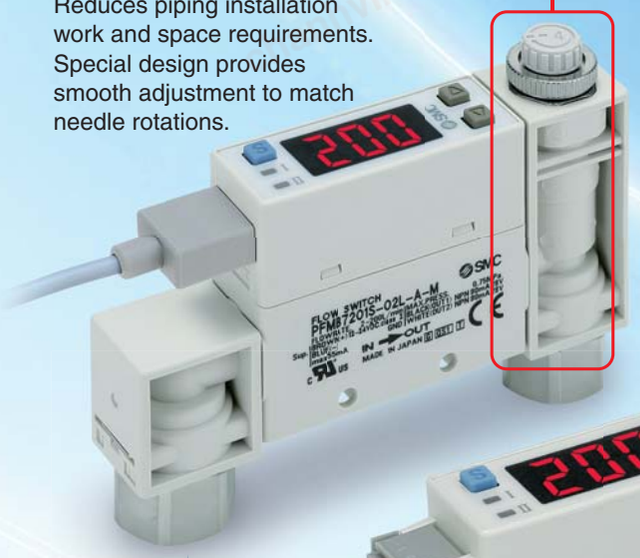

500 L/1000 L/2000 L type



200 L type



Response time

Can be selected from

50 ms (0.05 s)/0.1 s/ 0.5 s/1.0 s/2.0 s

Response time can be set depending on application.

Grease-free

Piping variations

200 L type

Straight

One-touch fitting Ø 8

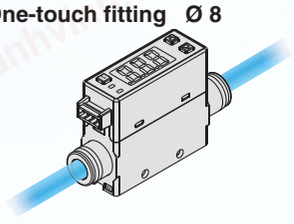

Female thread Rc, NPT, G 1/4

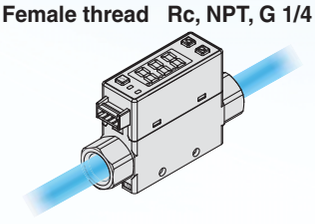

Bottom

One-touch fitting Ø 8

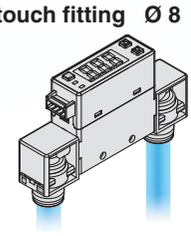

Female thread Rc, NPT, G 1/4

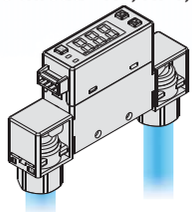

Reversible display

When the switch is used upside down, the orientation of the display can be rotated to make it easier to read.

When display is upside down.



With a reversible display function (Can be set with the reversible display mode.)



∗ For the straight section of piping, refer to “IN Side Straight Piping Length and Accuracy” on page 12.

◎ Functions (▶Refer to pages 30 and 31 for details.)

- Output operation
- Display colour
- Reference condition
- Display mode
- Response time
- Display OFF mode
- Setting of security code
- External input function
- Forced output function
- Accumulated value hold
- Peak/Bottom value display
- Keylock function
- Analogue output free range function
- Reversible display mode
- Reset to the default settings
- Error display function

Bypass structure

Bypass structure with protruding part at the main piping, reduces the contact of moist air with the sensor, reducing degradation of the sensor and maintaining accuracy.

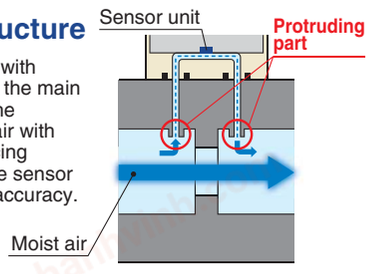

chanhvinh.com

Digital flow switch to save energy!

Flow control is necessary for promoting energy saving in any application.
Saving energy starts from numerical control of the flow consumption of equipment and lines and clarification of the purpose and effect.

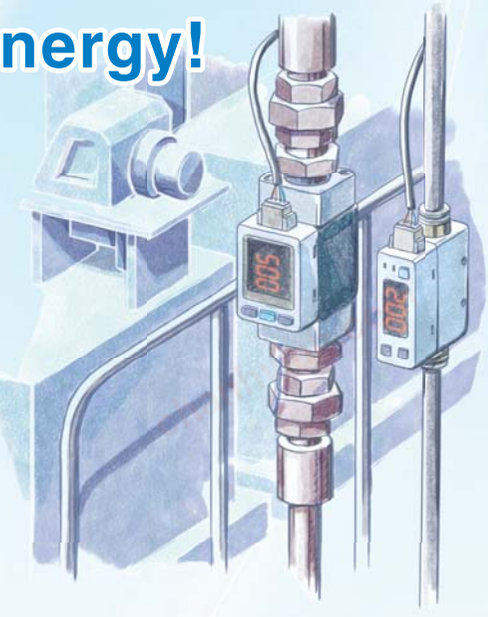

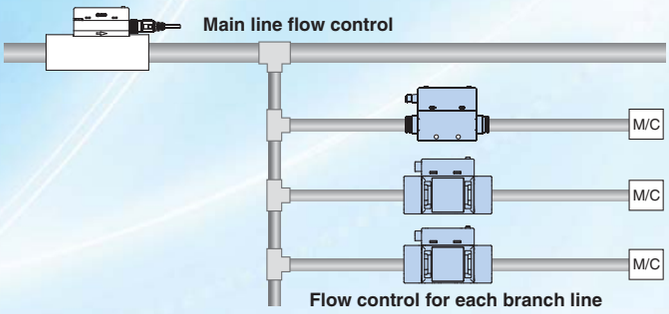

- Digital display allows visualization of flow rate.
- 2-colour display, Improved visibility



- Remote control is possible with accumulated pulse.

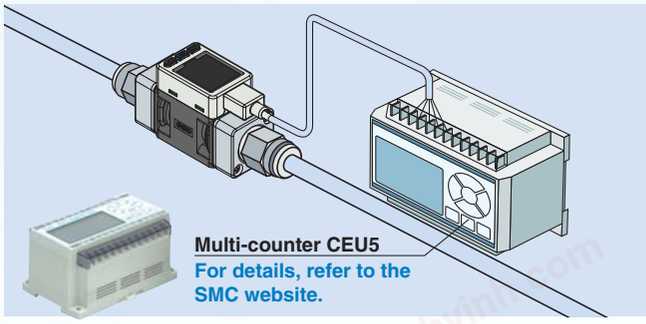

Applications

- Control of purge air flow of ionizer

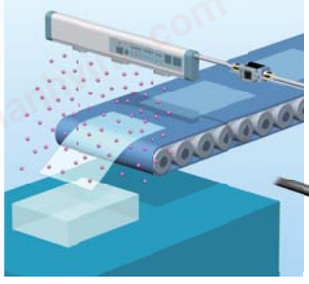

- Flow control of the air for spray painting



* The product is not designed to be explosion proof.

- Flow control of N_2 gas to prevent lead frame oxidation
- N_2 blow prevents distortion of camera image due to air turbulence.

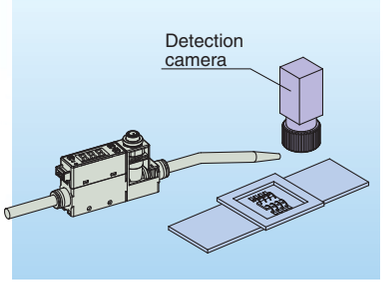

- Accumulated indication shows the operating flow rate or residual amount (of N_2 etc.) in a gas cylinder.

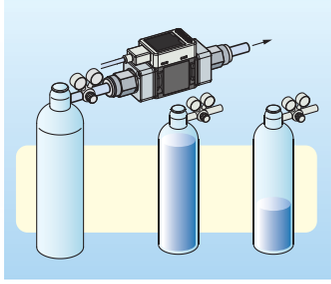

Mounting

200 L type

Through-hole

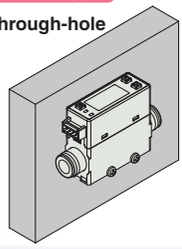

DIN rail

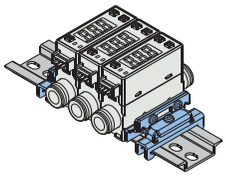

Bracket

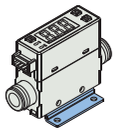

Panel mount

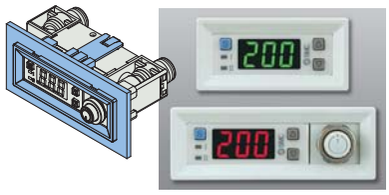

500 L/1000 L/2000 L type

Bracket

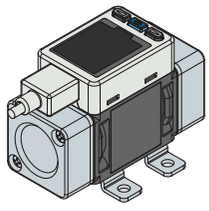

Example of recommended pneumatic circuit

Air quality in the product specification can be satisfied by using this pneumatic circuit.

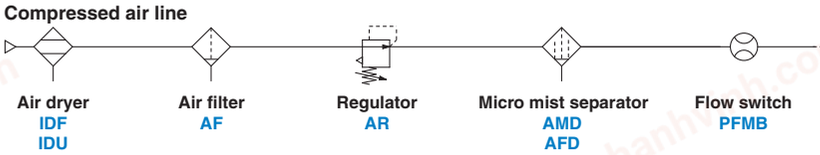

chanhvinh.com

3-Screen Display Digital Flow Monitor

PFG300 Series p. 24



Allows for the Monitoring of Remote Lines

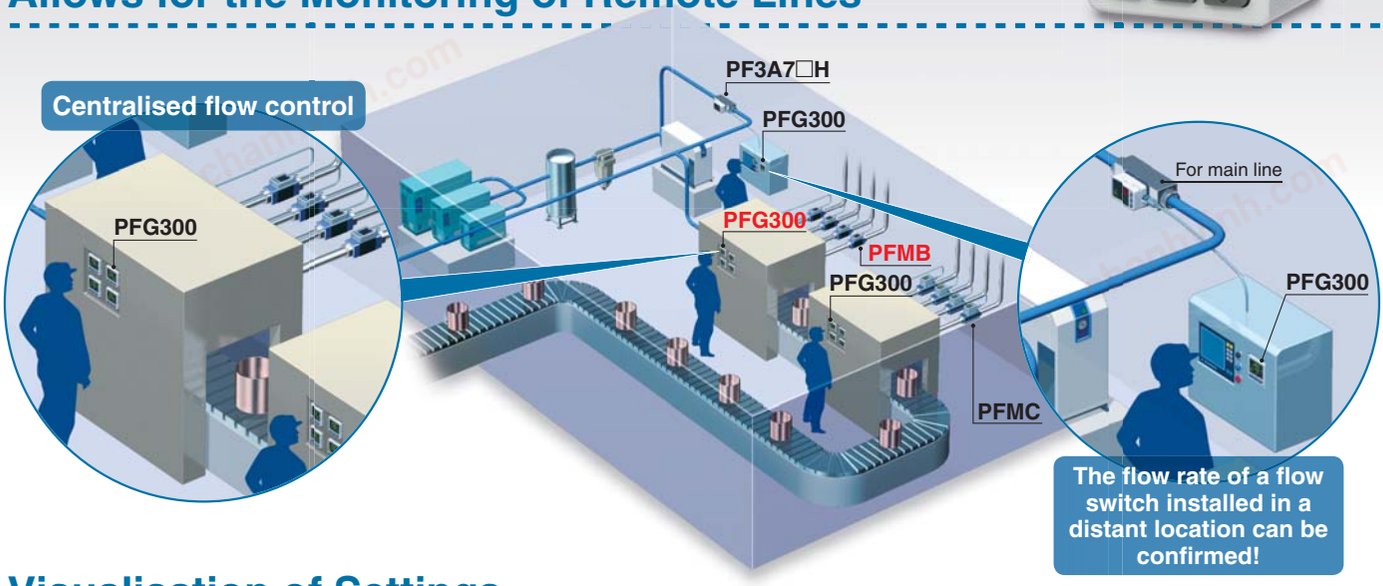

The flow rate of a flow switch installed in a distant location can be confirmed!

Visualisation of Settings

The sub screen (label) shows the item to be set.

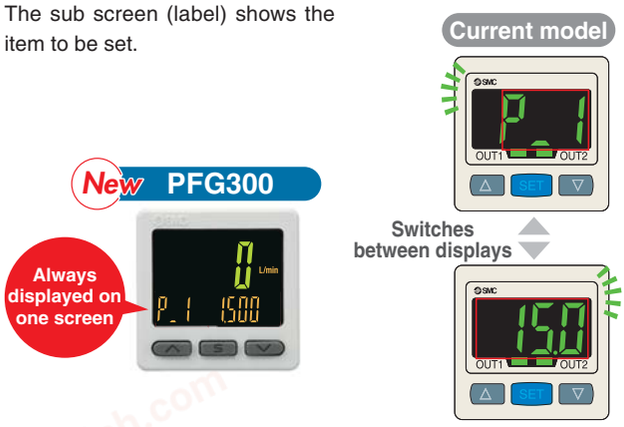

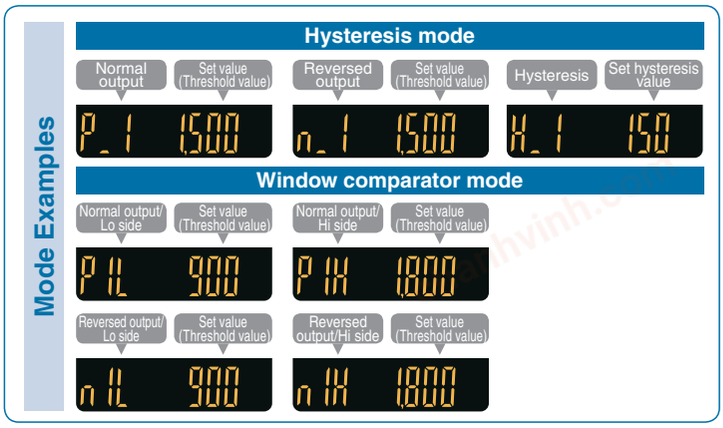

Easy Screen Switching

It is possible to change the settings while checking the measured value.

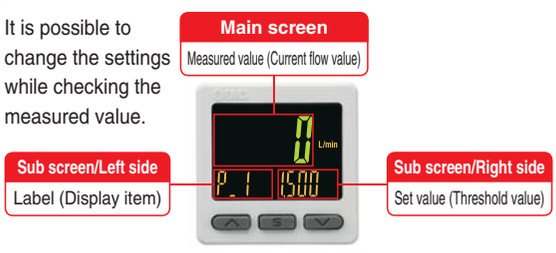

The sub screen can be switched by pressing the up/down buttons.



* Either “Input of line name” or “Display OFF” can be added via the function settings.

Simple 3-Step Setting

When the S button is pressed and the set value (P_1) is being displayed, the set value (threshold value) can be set. When the S button is pressed and the hysteresis (H_1) is being displayed, the hysteresis value can be set.

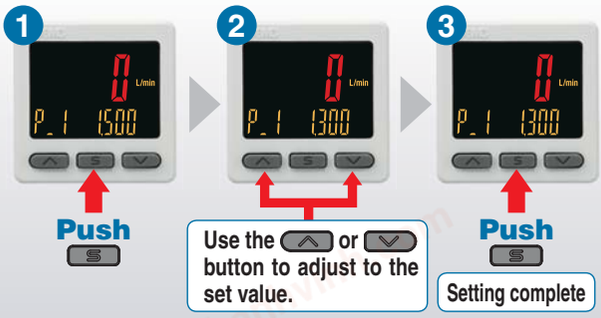

With a snap shot function for set value reading

Pressing the ▲ and ▼ buttons simultaneously for a minimum of 1 second will make the set value (threshold value) the same as the current flow value.

Snap shot function

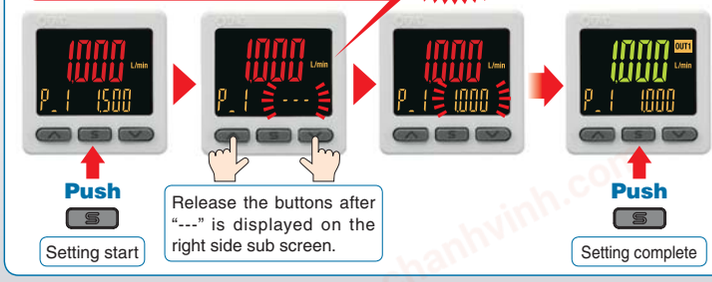

chanhvinh.com

NPN/PNP Switch Function

The number of stock items can be reduced.



Analogue output of 0 to 10 V is also available.

Voltage output	1 to 5 V	Switchable
	0 to 10 V	
Current output	4 to 20 mA	Fixed

Input Range Selection (for Pressure/Flow rate)

The displayed value to the sensor input can be set as required.
(Voltage input: 1 to 5 V/Current input: 4 to 20 mA)
Pressure switch/Flow switch can be displayed.

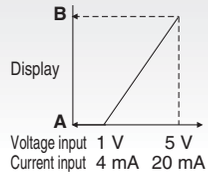

A is displayed for 1 V (or 4 mA).
B is displayed for 5 V (or 20 mA).
The range can be set as required.

■ Pressure Sensor for General Fluids/PSE570



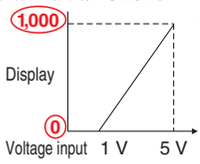

	A	B
PSE570	0	1,000
PSE573	-100	100
PSE574	0	500

Set A and B to the values shown in the table above.

Convenient Functions

Copy function

The settings of the master monitor can be copied to the slave monitors.

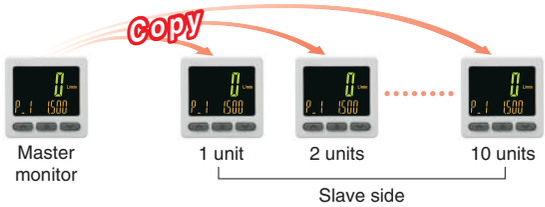

Security code

The key locking function keeps unauthorized persons from tampering with the settings.

Power saving mode

Power consumption is reduced by turning off the monitor.

Current consumption*1	Reduction rate*2
25 mA or less	Approx. 50 % reduction

*1 During normal operation *2 In power saving mode

External input function

The accumulated value, peak value, and bottom value can be reset remotely.

Compact & Lightweight

- **Compact: Max. 6 mm shorter**
- **Lightweight: Max. 5 g lighter (30 g → 25 g)**

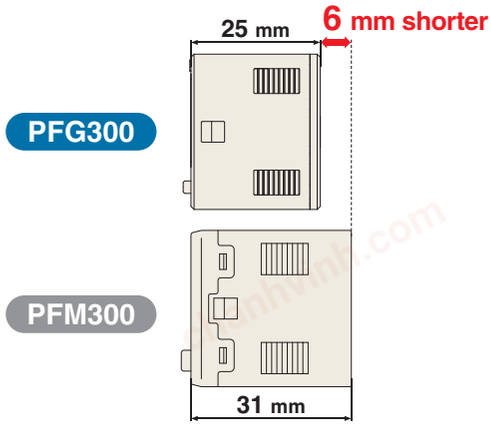

Functions (▶ Refer to pages 32 to 34 for details.)

- Output operation
- Simple setting mode
- Display colour
- Delay time setting
- Digital filter setting
- FUNC output switching function
- Selectable analogue output function
- External input function
- Forced output function
- Accumulated value hold
- Peak/Bottom value display
- Setting of security code
- Keylock function
- Reset to the default settings
- Display with zero cut-off setting
- Selection of display on sub screen
- Analogue output free range function
- Error display function
- Copy function
- Selection of power saving mode

Mounting

The bracket configuration allows for mounting in four orientations.

Bracket A

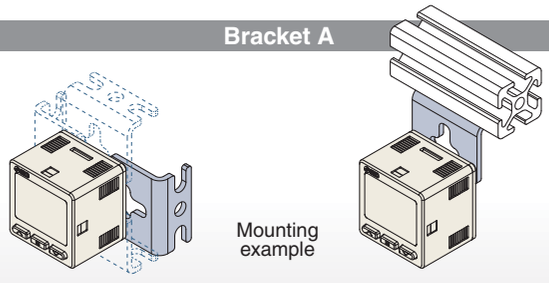

Bracket B

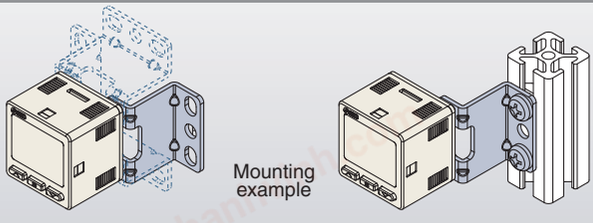

Panel mount

Mountable side by side without clearance

One opening!

· Reduced panel fitting labour
· Space saving

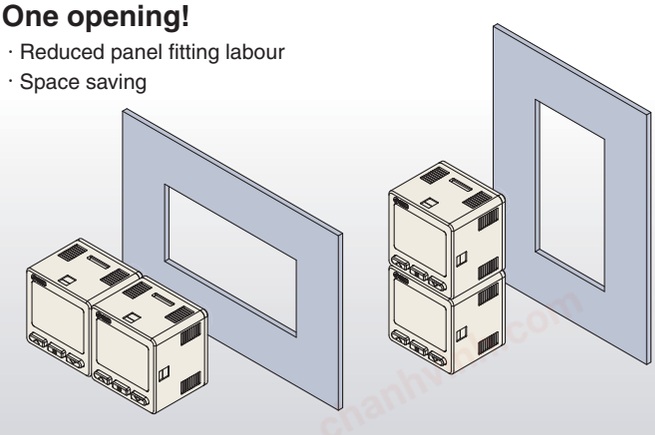

Flow Switch Flow Rate Variations

Series	Applicable fluid	Detection method	Rated flow range [l/min]
PFMV 	Dry air N_2	Thermal type (MEMS)	-3 -2 -1 -0.5 0 0.5 1 2 3 0 0.5 0 1 0 3 −0.5 0.5 −1 1 −3 3

Series	Availability of the digital flow monitor PFG300	Applicable fluid	Detection method	Smallest settable increment	Rated flow range [l/min]
					0.2 0.5 1 2 5 10 20 25 50 100 150 200 300 500 600 1000 2000 3000 6000 12000
PFM 	—	Dry air N_2 Ar CO_2	Thermal type (MEMS)	0.01 l/min	0.2 10
				0.1 l/min	0.5 25 1 50 2 100
PFMB p. 9   **PFG300** p. 24 		**Dry air N_2**	**Thermal type (MEMS) Bypass flow type**	**1 l/min**	**2 200** **5 500** **10 1000** **20 2000**
PFMC  **PFG300** 		Dry air N_2	Thermal type (MEMS) Bypass flow type	1 l/min	5 500 10 1000 20 2000
PF2A 	—	Air N_2	Thermal type (Thermistor)	0.1 l/min	1 10
				0.5 l/min	5 50
				1 l/min	10 100
				2 l/min	20 200
				5 l/min	50 500
PF3A7□H  **PFG300** 		Air N_2	Thermal type (Platinum sensor) Bypass flow type	2 l/min	30 3000
				5 l/min	60 6000
				10 l/min	120 12000

Flow Switch Variations / Basic Performance Table

Series	PFMV	PFM	PFMB p. 9	PFMC	PF2A	PF3A7□H
	 PFMV3		 PFG300 p. 24	 PFG300		 PFG300
Enclosure	IP40	IP40	**IP40**	IP65 [**Monitor unit** IP40]	IP65	IP65 [**Monitor unit** IP40]
Fluid	Dry air, N_2	Dry air, N_2, Ar, CO_2	**Dry air, N_2**	Dry air, N_2	Air, N_2	Air, N_2
Setting	Digital	Digital	**Digital**	Digital	Digital	Digital
Rated flow range	0 to 0.5 l/min -0.5 to 0.5 l/min 0 to 1 l/min -1 to 1 l/min 0 to 3 l/min -3 to 3 l/min	0.2 to 10 l/min 0.5 to 25 l/min 1 to 50 l/min 2 to 100 l/min	**2 to 200 l/min** 5 to 500 l/min 10 to 1000 l/min 20 to 2000 l/min	5 to 500 l/min 10 to 1000 l/min 20 to 2000 l/min	1 to 10 l/min 5 to 50 l/min 10 to 100 l/min 20 to 200 l/min 50 to 500 l/min	30 to 3000 l/min 60 to 6000 l/min 120 to 12000 l/min
Power supply voltage	12 to 24 VDC ±10 %	24 VDC ±10 %	**12 to 24 VDC ±10 %**	12 to 24 VDC ±10 %	12 to 24 VDC ±10 %	24 VDC ±10 %
Temperature characteristics (25°C standard)	±2 % F.S. (15 to 35 °C) ±5 % F.S. (0 to 50 °C) [**Monitor unit** ±0.5 % F.S. (0 to 50 °C)]	±2 % F.S. (15 to 35 °C) ±5 % F.S. (0 to 50 °C)	**±2 % F.S. (15 to 35 °C)** **±5 % F.S. (0 to 50 °C)** [**Monitor unit** ±0.5 % F.S. (0 to 50 °C)]	±2 % F.S. (15 to 35 °C) ±5 % F.S. (0 to 50 °C) [**Monitor unit** ±0.5 % F.S. (0 to 50 °C)]	±3 % F.S. (15 to 35 °C) ±5 % F.S. (0 to 50 °C)	±5 % F.S. (0 to 50 °C) [**Monitor unit** ±0.5 % F.S. (0 to 50 °C)]
Repeatability	±1 % F.S. (Fluid: Dry air) Analogue output: ±5 % F.S. [**Monitor unit** ±0.1 % F.S. Analogue output: ±0.5 % F.S.]	±1 % F.S. (Fluid: Dry air) Analogue output: ±3 % F.S.	**±1 % F.S. (Fluid: Dry air)** [**Monitor unit** ±0.1 % F.S.]	±1 % F.S. (Fluid: Dry air) [**Monitor unit** ±0.1 % F.S.]	±1 % F.S. (PF2A7□0) ±2 % F.S. (PF2A7□1)	±1 % F.S. [**Monitor unit** ±0.1 % F.S.]
Hysteresis	Hysteresis mode: Variable Window comparator mode: Variable	Hysteresis mode: Variable Window comparator mode: Variable	**Hysteresis mode: Variable** **Window comparator mode: Variable**	Hysteresis mode: Variable Window comparator mode: Variable	Hysteresis mode: Variable Window comparator mode: Fixed (3 digits)	Hysteresis mode: Variable Window comparator mode: Variable
Output	NPN/PNP open collector Analogue voltage output Analogue current output	NPN/PNP open collector Accumulated pulse output Analogue voltage output Analogue current output	**NPN/PNP** **open collector** **Accumulated pulse output** **Analogue voltage output** **Analogue current output**	NPN/PNP open collector Accumulated pulse output Analogue voltage output Analogue current output	NPN/PNP open collector Accumulated pulse output	NPN/PNP open collector Accumulated pulse output Analogue voltage output Analogue current output
Display	[**Monitor unit** 2-colour LCD display]	2-colour LED display	**2-colour LED display** / **2-colour LCD display** [**Monitor unit** 3-colour LCD display]	3-colour LCD display	LED display	3-colour LCD display

∗ The monitor unit shows the PFG300 and PFMV3.

chanhvinh.com

chanhvinh.com

chanhvinh.com

CONTENTS

2-Colour Display Digital Flow Switch *PFMB* Series
3-Screen Display Digital Flow Monitor *PFG300* Series

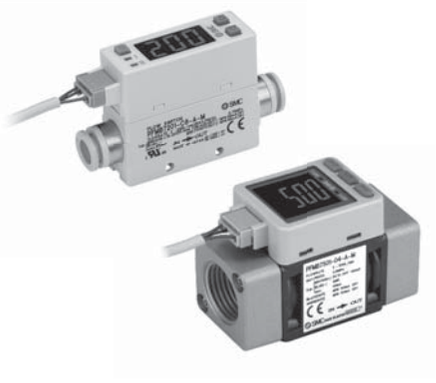

2-Colour Display Digital Flow Switch PFMB Series

How to Order ..... p. 9
Specifications ..... p. 11
Flow Range ..... p. 12
Analogue Output ..... p. 12
Pressure Loss ..... p. 12
IN Side Straight Piping Length and Accuracy ..... p. 12
Internal Circuits and Wiring Examples ..... p. 13
Construction: Parts in Contact with Fluid ..... p. 14
Dimensions ..... p. 15



3-Screen Display Digital Flow Monitor PFG300 Series

How to Order ..... p. 24
Specifications ..... p. 25
Internal Circuits and Wiring Examples ..... p. 26
Dimensions ..... p. 27

PFMB/Function Details ..... p. 30
PFG300/Function Details ..... p. 32
Safety Instructions ..... Back Cover

chanhvinh.com

2-Colour Display
Digital Flow Switch
PFMB7 Series

(Only 200 L type)

RoHS



How to Order

PFMB7 201 □ – C8 □ – A □ – M □ □

Rated flow range (Flow rate range)

201	2 to 200 l/min

Flow adjustment valve

—	None
S	Yes

Port size

C8	Ø 8 (5/16") One-touch fitting
02∗1	Rc1/4
N02∗1	NPT1/4
F02∗1	G1/4 ∗2

∗1 Made to order
∗2 ISO1179-1 compliant

Piping entry direction

—	L∗1
Straight	Bottom
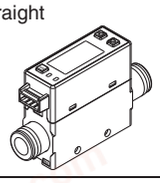	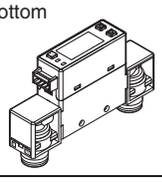

∗1 Made to order

Output specification

	OUT1	OUT2	Applicable monitor unit model
A	NPN	NPN	—
B	PNP	PNP	—
C	NPN	Analogue 1 to 5 V	PFG300 series
D	NPN	Analogue 4 to 20 mA	PFG310 series
E∗1	PNP	Analogue 1 to 5 V	PFG300 series
F∗1	PNP	Analogue 4 to 20 mA	PFG310 series
G∗1	NPN	External input ∗2	—
H∗1	PNP	External input ∗2	—

∗1 Made to order
∗2 Accumulated flow value, peak/bottom flow value can be reset by external signal input.

Calibration certificate ∗1

—	None
A∗2	With calibration certificate

∗1 Certificate in both English and Japanese
∗2 Made to order

Unit specification

M	SI unit only ∗1
—	Units selection function

∗1 Fixed unit: Instantaneous flow: l/min
Accumulated flow: L

Option 2

—	R	S
No bracket	Bracket (For without flow adjustment valve) **ZS-33-M** 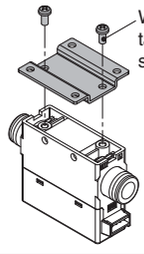	Bracket (For with straight type flow adjustment valve) **ZS-33-MS** 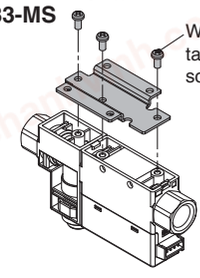

T	V
Panel mount adapter (For without flow adjustment valve) **ZS-33-J** 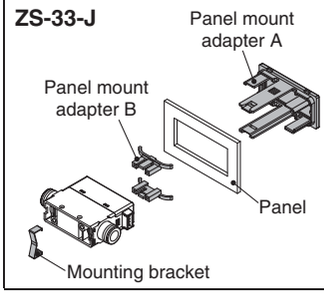	Panel mount adapter (For with flow adjustment valve) **ZS-33-JS** 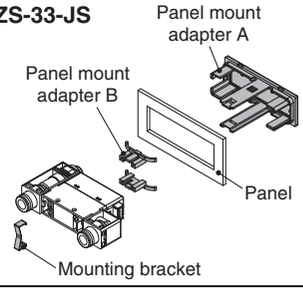

∗ Options are shipped together with the product, but not assembled.
When only optional parts are required, refer to Option 2/Part Nos. on page 10.

Option 1

—	W
Lead wire with connector (2 m) 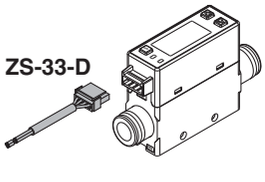	Lead wire with connector (2 m) + Rubber cover for connector (Silicone rubber) 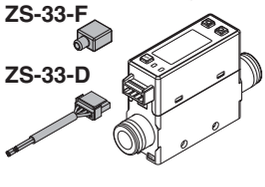

N
Without lead wire with connector

∗ When only optional parts are required, refer to Option 1/Part Nos. on page 10.

DIN Rail Mounting Bracket (Ordered Separately)

ZS – 33 – R □

Stations

1	1 station
2	2 stations
3	3 stations
4	4 stations
5	5 stations

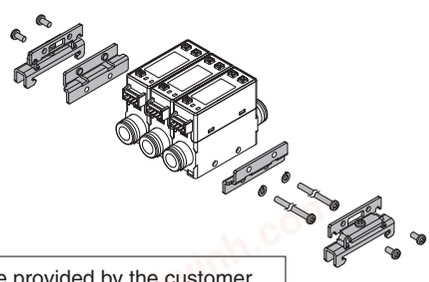

• The DIN rail should be provided by the customer.
• The DIN rail is not suitable for port size F02 (G1/4).

chanhvinh.com



How to Order

PFMB7 501 – □ 04 – A □ – M □ □

Rated flow range (Flow rate range)

501	5 to 500 l/min
102	10 to 1000 l/min
202	20 to 2000 l/min

Thread type

—	Rc
N	NPT
F	G ∗1

∗1 ISO228 compliant

Port size

	Port size	Rated flow range		
		501	**102**	**202**
04	1/2	●	●	—
06	3/4	—	—	●

Output specification

	OUT1	OUT2	Applicable monitor unit model
A	NPN	NPN	—
B	PNP	PNP	—
C	NPN	Analogue 1 to 5 V	PFG300 series
D	NPN	Analogue 4 to 20 mA	PFG310 series
E∗1	PNP	Analogue 1 to 5 V	PFG300 series
F∗1	PNP	Analogue 4 to 20 mA	PFG310 series
G∗1	NPN	External input ∗2	—
H∗1	PNP	External input ∗2	—

∗1 Made to order
∗2 Accumulated flow value, peak/bottom flow value can be reset by external signal input.

Option 1

—	**W**
Lead wire with connector (2 m) 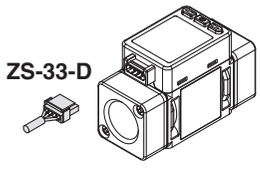	Lead wire with connector (2 m) + Rubber cover for connector (Silicone rubber) 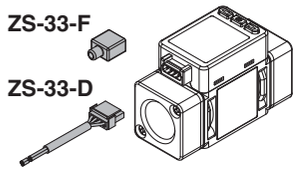
N	
Without lead wire with connector	

∗ When only optional parts are required, refer to Option 1/Part Nos. below.

Option 2

—	**R**
No bracket	With bracket 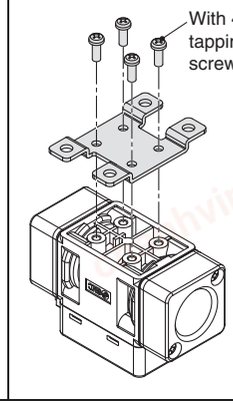

∗ Options are shipped together with the product, but not assembled.
When only optional parts are required, refer to Option 2/Part Nos. below.

Unit specification

M	SI unit only ∗1
—	Units selection function

∗1 Fixed unit: Instantaneous flow: l/min
Accumulated flow: L

Calibration certificate ∗1

—	None
A∗2	With calibration certificate

∗1 Certificate in both English and Japanese
∗2 Made to order

Option 1/Part Nos.

Option	Part no.	Qty.	Note
Lead wire with connector	**ZS-33-D**	1	Lead wire: 2 m
Rubber cover (Silicone rubber)	**ZS-33-F**	1	For connector

Option 2/Part Nos.

Option	Part no.	Qty.	Note
Bracket (for PFMB7201)	**ZS-33-M**	1	With 2 tapping screws (3 x 6)
Bracket (for PFMB7201S)	**ZS-33-MS**	1	With 3 tapping screws (3 x 6)
Panel mount adapter (for PFMB7201)	**ZS-33-J**	1	
Panel mount adapter (for PFMB7201S)	**ZS-33-JS**	1	
Bracket (for PFMB7501/7102)	**ZS-42-C**	1	With 4 tapping screws (3 x 6)
Bracket (for PFMB7202)	**ZS-42-D**	1	With 4 tapping screws (3 x 6)

chanhvinh.com

PFMB7 Series

Specifications

For flow switch precautions and specific product precautions, refer to the "Operation Manual" on the SMC website.

Model			PFMB7201	PFMB7501	PFMB7102	PFMB7202
Fluid	Applicable fluid *1		Dry air, N_2 (Air quality grade is JIS B 8392-1 1.1.2 to 1.6.2, ISO 8573-1 1.1.2 to 1.6.2)			
	Fluid temperature range		0 to 50 °C			
Flow	Detection method		Thermal type			
	Rated flow range		2 to 200 l/min	5 to 500 l/min	10 to 1000 l/min	20 to 2000 l/min
	Set point range	Instantaneous flow	2 to 210 l/min	5 to 525 l/min	10 to 1050 l/min	20 to 2100 l/min
		Accumulated flow	0 to 999,999,999 L	0 to 999,999,990 L		
	Smallest settable increment	Instantaneous flow	1 l/min			
		Accumulated flow	1 L	10 L		
	Accumulated volume per pulse (Pulse width = 50 ms)		1 L/pulse		10 L/pulse	
	Accumulated value hold function *2		Intervals of 2 or 5 minutes can be selected.			
Pressure	Rated pressure range		0 to 0.75 MPa	0 to 0.8 MPa		
	Proof pressure		1.0 MPa	1.2 MPa		
	Pressure loss		Refer to "Pressure Loss" graph.			
	Pressure characteristics *3		±5 % F.S. (0 to 0.75 MPa, 0.35 MPa standard)	±5 % F.S. (0 to 0.8 MPa, 0.6 MPa standard)		
Electrical	Power supply voltage		12 to 24 VDC ±10 %			
	Current consumption		55 mA or less			
	Protection		Polarity protection			
Accuracy *11	Display accuracy		±3 % F.S.			
	Analogue output accuracy		±3 % F.S.			
	Repeatability		±1 % F.S. (±2 % F.S. when the response time is set to 0.05 s)			
	Temperature characteristics		±5 % F.S. (0 to 50 °C, 25 °C standard)			
Switch output	Output type		NPN open collector PNP open collector			
	Output mode		Select from Hysteresis, Window comparator, Accumulated output, or Accumulated pulse output modes.			
	Switch operation		Select from Normal or Reversed output.			
	Maximum load current		80 mA			
	Maximum applied voltage (NPN only)		28 VDC			
	Internal voltage drop (Residual voltage)		NPN output type: 1 V or less (at load current of 80 mA) PNP output type: 1.5 V or less (at load current of 80 mA)			
	Response time *4		Select from 0.05 s, 0.1 s, 0.5 s, 1 s, or 2 s.			
	Hysteresis *5		Variable from 0			
	Protection		Short circuit protection			
Analogue output *6	Output type		Voltage output: 1 to 5 V, Current output: 4 to 20 mA			
	Impedance	Voltage output	Output impedance: Approx. 1 kΩ			
		Current output	Maximum load impedance at power supply voltage of 24 V: 600 Ω, at power supply voltage of 12 V: 300 Ω			
	Response time *7		Linked to the response time of the switch output			
External input *8	External input		Input voltage: 0.4 V or less (Reed or Solid state) for 30 ms or longer			
	Input mode		Select from Accumulated value external reset or Peak/Bottom value reset.			
Display	Reference condition *9		Select from Standard conditions or Normal conditions.			
	Display mode		Select from Instantaneous flow or Accumulated flow.			
	Unit *10	Instantaneous flow	l/min or cfm can be selected.			
		Accumulated flow	L or ft^3 can be selected.	L or ft^3 can be selected.		
	Display range	Instantaneous flow	−10 to 210 l/min (Displays [0] when value is within the −1 to 1 l/min range)	−25 to 525 l/min (Displays [0] when value is within the −4 to 4 l/min range)	−50 to 1050 l/min (Displays [0] when value is within the −9 to 9 l/min range)	−100 to 2100 l/min (Displays [0] when value is within the −19 to 19 l/min range)
		Accumulated flow	0 to 999,999,999 L			
	Minimum display unit	Instantaneous flow	1 l/min			
		Accumulated flow *13	1 L	10 L		
	Display		LED, Colour: Red/Green, 3 digits, 7 segments	LCD, Colour: Red/Green, 4 digits, 7 segments		
	Indicator LED		LED ON when switch output is ON (OUT1: Green, OUT2: Red)	LED ON when switch output is ON (OUT1/OUT2: Orange)		
Environment	Enclosure		IP40			
	Withstand voltage		1000 VAC for 1 minute between terminals and housing			
	Insulation resistance		50 MΩ or more (500 VDC measured via megohmmeter) between terminals and housing			
	Operating temperature range		Operating: 0 to 50 °C, Stored: −10 to 60 °C (No condensation or freezing)			
	Operating humidity range		Operating/Stored: 35 to 85 % RH (No condensation or freezing)			
Standards			CE, UL (CSA), RoHS	CE, RoHS		
Piping	Piping specification		Rc1/4, NPT1/4, G1/4, Ø 8 One-touch fitting	Rc1/2, NPT1/2, G1/2		Rc3/4, NPT3/4, G3/4
	Piping entry direction		Straight, Bottom			
Main materials of parts in contact with fluid *12			FKM, Stainless steel 304, PPS, PBT, Brass (Electroless nickel plating), HNBR, Si, Au, GE4F	ADC, PPS, Stainless steel 304, Au, HNBR, Si, GE4F		
Weight	Body		Rc1/4, NPT1/4/Straight: 70 g, Bottom: 85 g G1/4/Straight: 115 g, Bottom: 130 g Ø 8 One-touch fitting/Straight: 50 g, Bottom: 65 g	100 g		155 g
	Flow adjustment valve		+45 g	—		
	Lead wire		+35 g			
	Bracket		+20 g	+25 g		+30 g
	Panel mount adapter		+15 g	—		
	DIN rail mounting bracket		+65 g	—		

*1 Refer to the "Example of recommended pneumatic circuit" on page 2.

*2 When using the accumulated value hold function, use the operating conditions to calculate the product life, and do not exceed it. The maximum access limit of the memory device is 1 million times. If the product is operated 24 hours per day, the product life will be as follows:
- 5 min interval: life is calculated as 5 min x 1 million = 5 million min = 9.5 years
- 2 min interval: life is calculated as 2 min x 1 million = 2 million min = 3.8 years

If the accumulated value external reset is repeatedly used, the product life will be shorter than the calculated life.

*3 Do not release the OUT side piping port of the product directly to the atmosphere without connecting piping. If the product is used with the piping port released to atmosphere, accuracy may vary.

*4 The time from when the flow is changed by a step input (when the flow rate changes from 0 to the maximum value of the rated flow range instantaneously) until the switch output turns ON (or OFF) when set to be 90 % of the rated flow rate

*5 If the flow fluctuates around the set value, the width for setting more than the fluctuating width needs to be set. Otherwise, chattering will occur.

*6 When using a product with an analogue output

*7 The time from when the flow is changed by a step input (when the flow rate changes from 0 to the maximum value of the rated flow range instantaneously) until the analogue output reaches 90 % of the rated flow rate

*8 When using a product with an external input

*9 The flow rate given in the specifications is the value under standard conditions.

*10 Setting is only possible for models with the units selection function.

*11 For details, refer to "IN Side Straight Piping Length and Accuracy" on page 12.

*12 For details, refer to "Construction: Parts in Contact with Fluid" on page 14.

*13 The accumulated flow display is the upper 3-digit, middle 3-digit, and lower 3-digit (total of 9 digits) display. The position of the dots on the upper part of the screen indicates which digits are displayed.

* Products with tiny scratches, marks, or display colour or brightness variations which do not affect the performance of the product are verified as conforming products.

chanhvinh.com

Flow Range

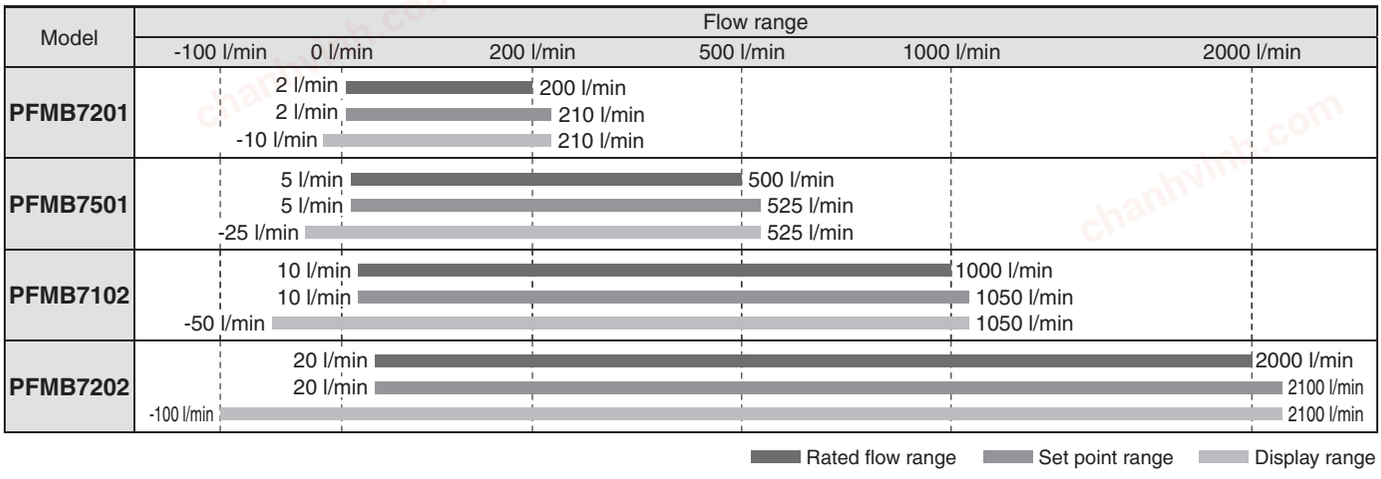

Analogue Output

Flow/Analogue Output

	A	B	C
Voltage output	1 V	1.04 V	5 V
Current output	4 mA	4.16 mA	20 mA

Model	Minimum value of the rated flow range	Maximum value of the rated flow range
PFMB7201	2 l/min	200 l/min
PFMB7501	5 l/min	500 l/min
PFMB7102	10 l/min	1000 l/min
PFMB7202	20 l/min	2000 l/min

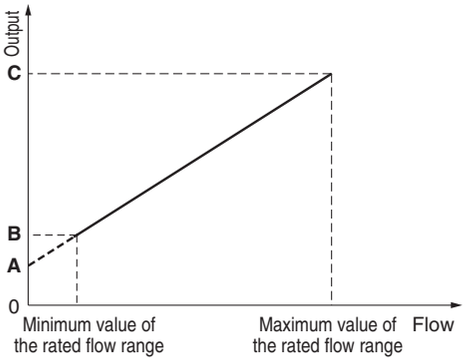

Flow Adjustment Valve Flow Rate Characteristics

PFMB7201 (for 200 l/min)

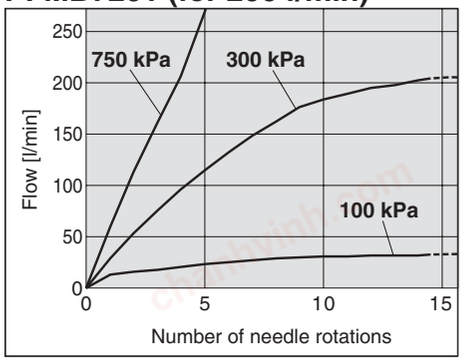

Pressure Loss (Reference Data)

PFMB7201 (for 200 l/min) (Without flow adjustment valve)

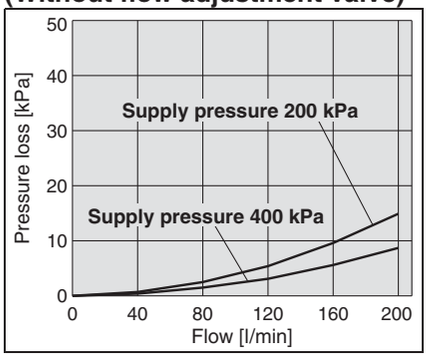

PFMB7501 (for 500 l/min)

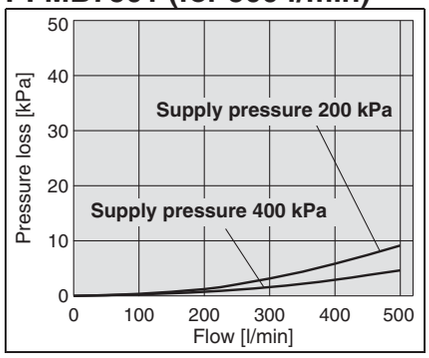

PFMB7102 (for 1000 l/min)

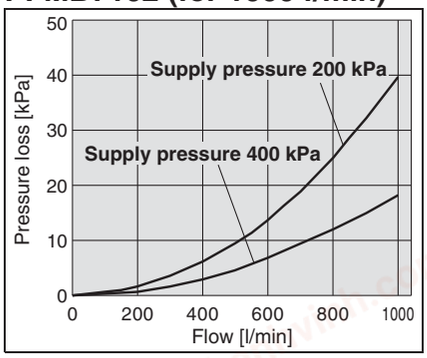

PFMB7202 (for 2000 l/min)

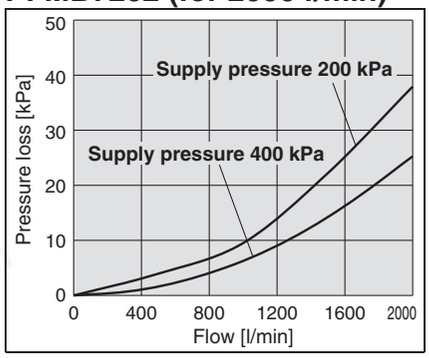

IN Side Straight Piping Length and Accuracy (Reference Data)

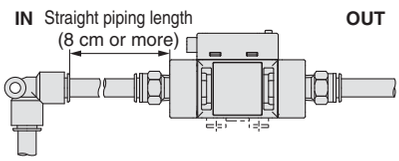

- The piping on the IN side must have a straight section of piping with a length of 8 cm or more. If a straight section of piping is not installed, the accuracy can vary by approximately ±2 % F.S.
  * "Straight section" means a part of the piping without any bends or rapid changes in the cross sectional area.
- When the PFMB7201 is connected to tubing, use a tube I.D. 5 mm just before the product.
- When the PFMB7501 or 7102 is connected to tubing, use a tube I.D. 9 mm or more just before the product.
  The accuracy can vary by approximately ±2 % F.S. when such tubing is not used.

PFMB7201/7501/7102/7202

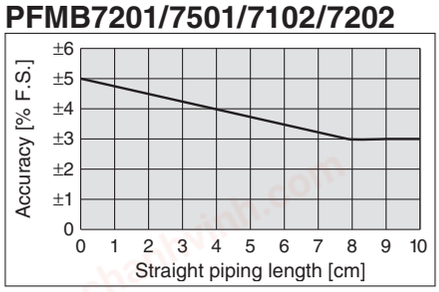

chanhvinh.com

Internal Circuits and Wiring Examples

NPN (2 outputs) type
PFMB7□□□-□□-A□-□□□

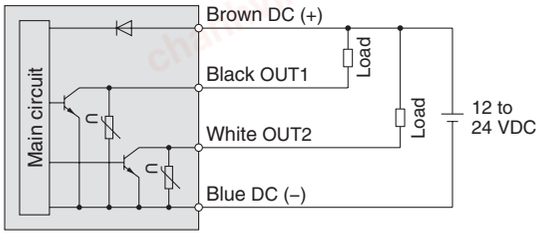

Max. applied voltage: 28 V, Max. load current: 80 mA, Internal voltage drop: 1 V or less

PNP (2 outputs) type
PFMB7□□□-□□-B□-□□□

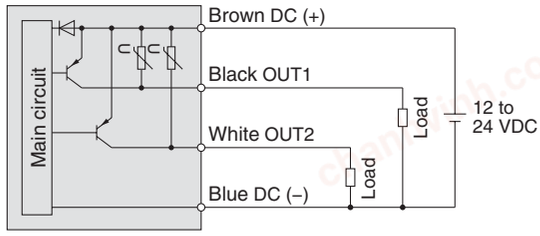

Max. load current: 80 mA, Internal voltage drop: 1.5 V or less

NPN (1 output) + Analogue (1 to 5 V) output type
PFMB7□□□-□□-C□-□□□

NPN (1 output) + Analogue (4 to 20 mA) output type
PFMB7□□□-□□-D□-□□□

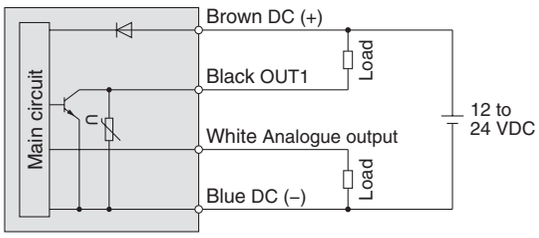

Max. applied voltage: 28 V, Max. load current: 80 mA, Internal voltage drop: 1 V or less
C: Analogue output: 1 to 5 V
Output impedance: 1 kΩ
D: Analogue output: 4 to 20 mA
Max. load impedance: 600 Ω

PNP (1 output) + Analogue (1 to 5 V) output type
PFMB7□□□-□□-E□-□□□

PNP (1 output) + Analogue (4 to 20 mA) output type
PFMB7□□□-□□-F□-□□□

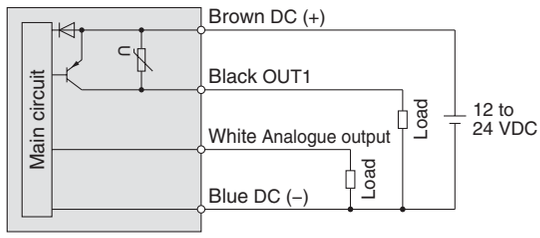

Max. load current: 80 mA, Internal voltage drop: 1.5 V or less
E: Analogue output: 1 to 5 V
Output impedance: 1 kΩ
F: Analogue output: 4 to 20 mA
Max. load impedance: 600 Ω

NPN (1 output) + External input type
PFMB7□□□-□□-G□-□□□

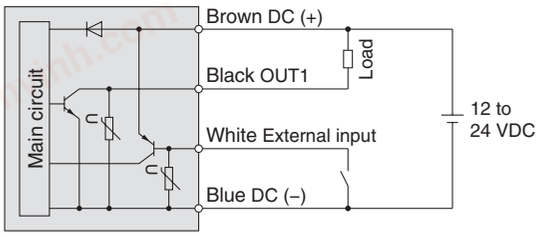

Max. applied voltage: 28 V, Max. load current: 80 mA, Internal voltage drop: 1 V or less
External input: Input voltage 0.4 V or less (Reed or Solid state input) for 30 ms or longer

PNP (1 output) + External input type
PFMB7□□□-□□-H□-□□□

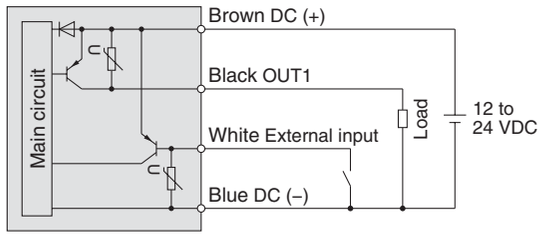

Max. load current: 80 mA, Internal voltage drop: 1.5 V or less
External input: Input voltage 0.4 V or less (Reed or Solid state input) for 30 ms or longer

Accumulated pulse output wiring examples

NPN (2 outputs) type
PFMB7□□□-□□-A□-□□□

NPN (1 output) + Analogue output type
PFMB7□□□-□□-C□-□□□
PFMB7□□□-□□-D□-□□□

NPN (1 output) + External input type
PFMB7□□□-□□-G□-□□□

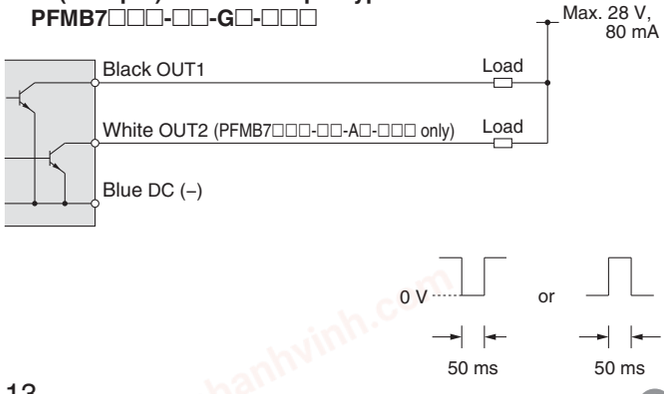

PNP (2 outputs) type
PFMB7□□□-□□-B□-□□□

PNP (1 output) + Analogue output type
PFMB7□□□-□□-E□-□□□
PFMB7□□□-□□-F□-□□□

PNP (1 output) + External input type
PFMB7□□□-□□-H□-□□□

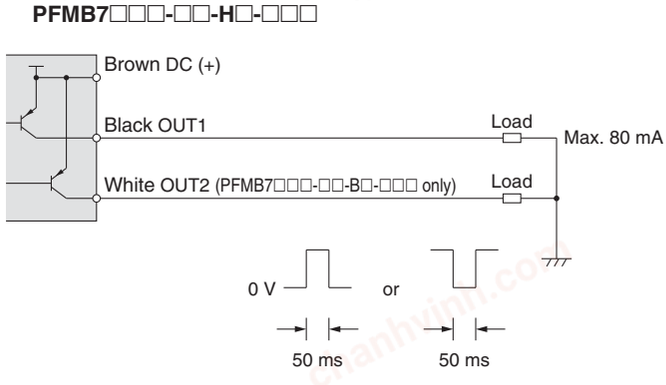

chanhvinh.com

Construction: Parts in Contact with Fluid

PFMB7201

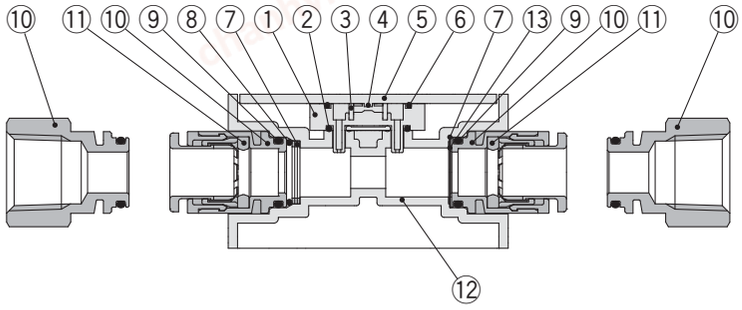

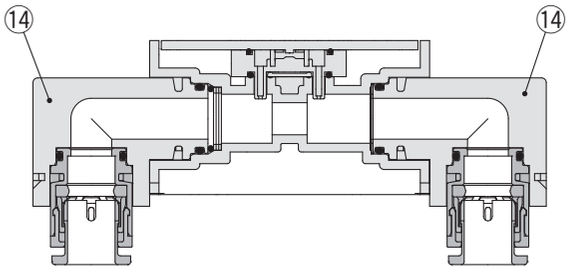

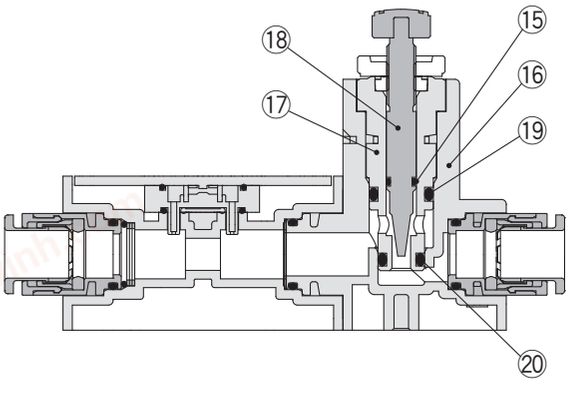

Component Parts

No.	Description	Material	Note
1	**Sensor body**	PPS	
2	**Gasket**	HNBR	
3	**Flow rectifier**	Stainless steel 304	
4	**Sensor chip**	Silicon	
5	**Printed circuit board**	GE4F	
6	**Gasket**	HNBR	
7	**Flow rectifier**	Stainless steel 304	
8	**O-ring**	FKM	Fluoro coating
9	**O-ring**	FKM	Fluoro coating
10	**Fitting for piping**	Brass	Electroless nickel plating
11	**O-ring**	FKM	Fluoro coating
12	**Body**	PBT	
13	**Gasket**	HNBR	
14	**Bottom piping adapter**	PBT	
15	**O-ring**	HNBR	Fluoro coating
16	**Flow adjustment valve body**	PBT	
17	**Body**	Brass	Electroless nickel plating
18	**Needle**	Brass	Electroless nickel plating
19	**O-ring**	HNBR	Fluoro coating
20	**O-ring**	HNBR	Fluoro coating

PFMB7501/7102/7202

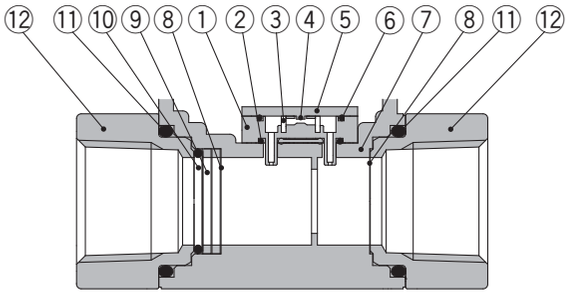

Component Parts

No.	Description	Material	Note
1	**Sensor body**	PPS	
2	**Gasket**	HNBR	
3	**Flow rectifier**	Stainless steel 304	
4	**Sensor chip**	Silicon	
5	**Printed circuit board**	GE4F	
6	**Gasket**	HNBR	
7	**Body**	PPS	
8	**Mesh**	Stainless steel 304	
9	**Spacer**	PPS	
10	**O-ring**	HNBR	
11	**O-ring**	HNBR	
12	**Attachment**	ADC	Coating

chanhvinh.com

PFMB7 Series

Dimensions

PFMB7201-C8

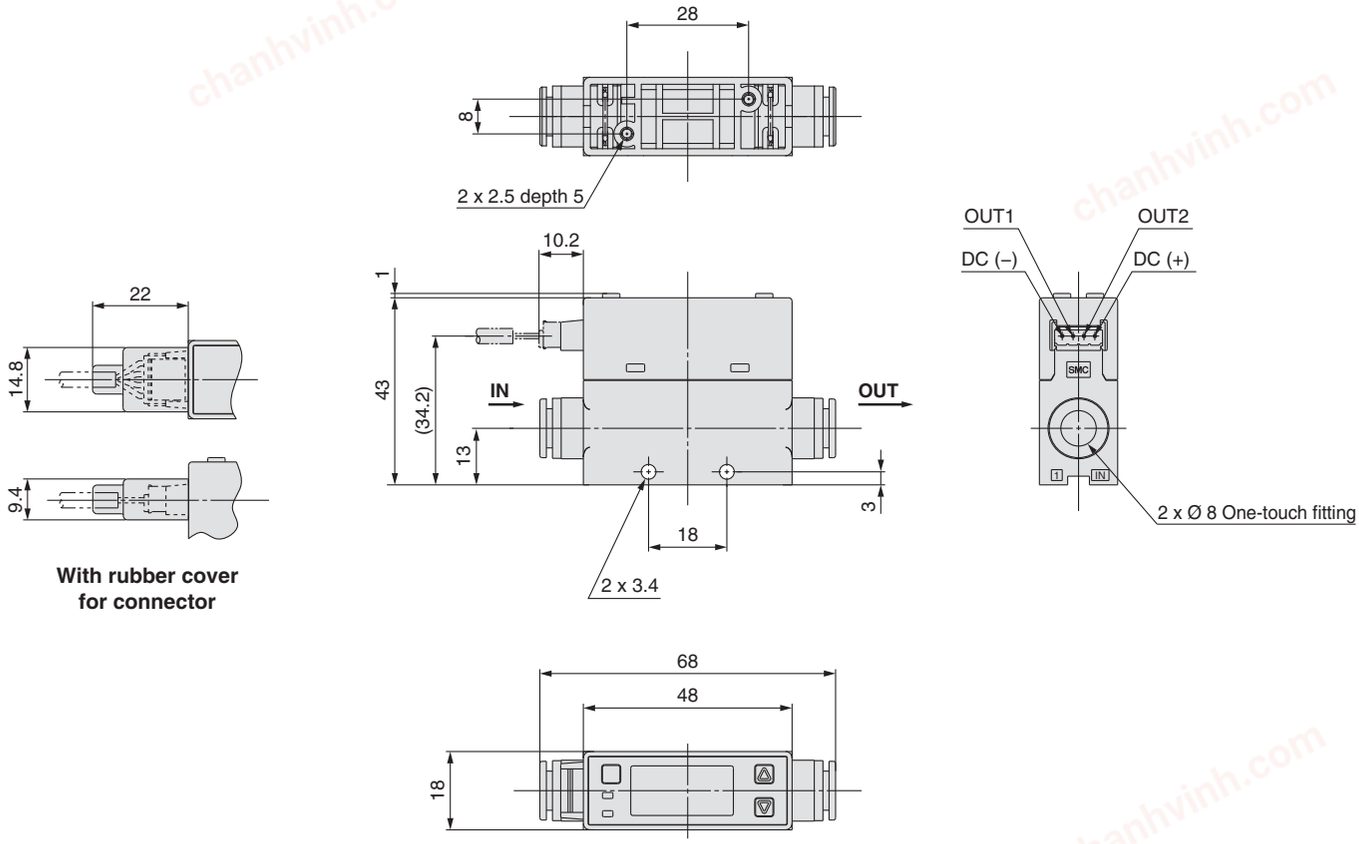

PFMB7201-C8L

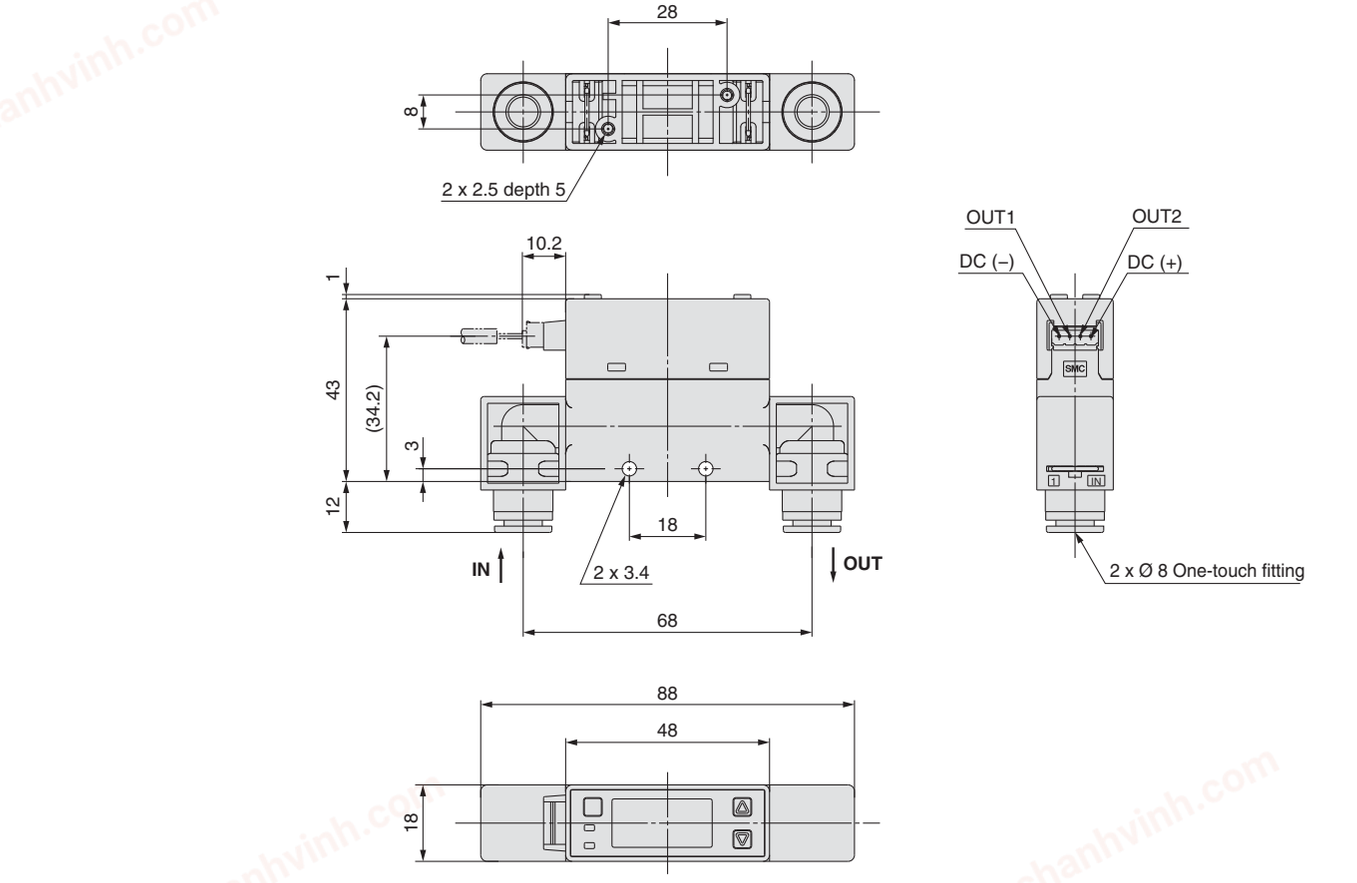

chanhvinh.com

Dimensions

PFMB7201-(N)02

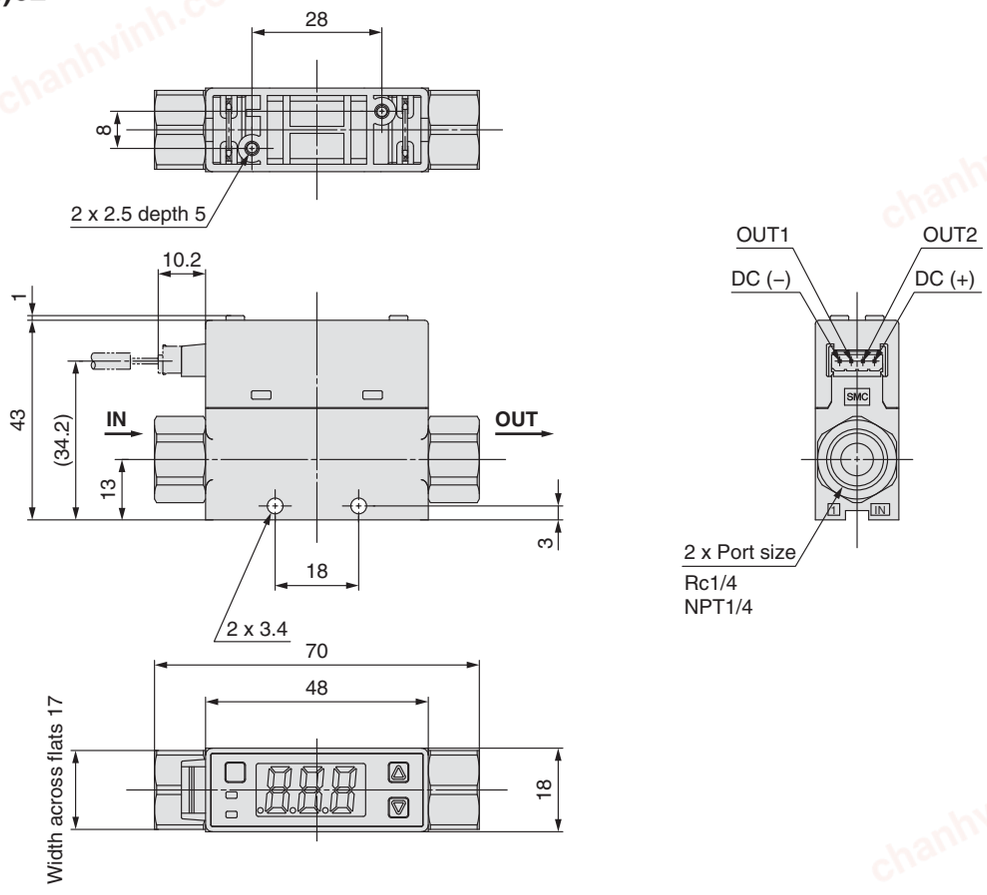

PFMB7201-(N)02L

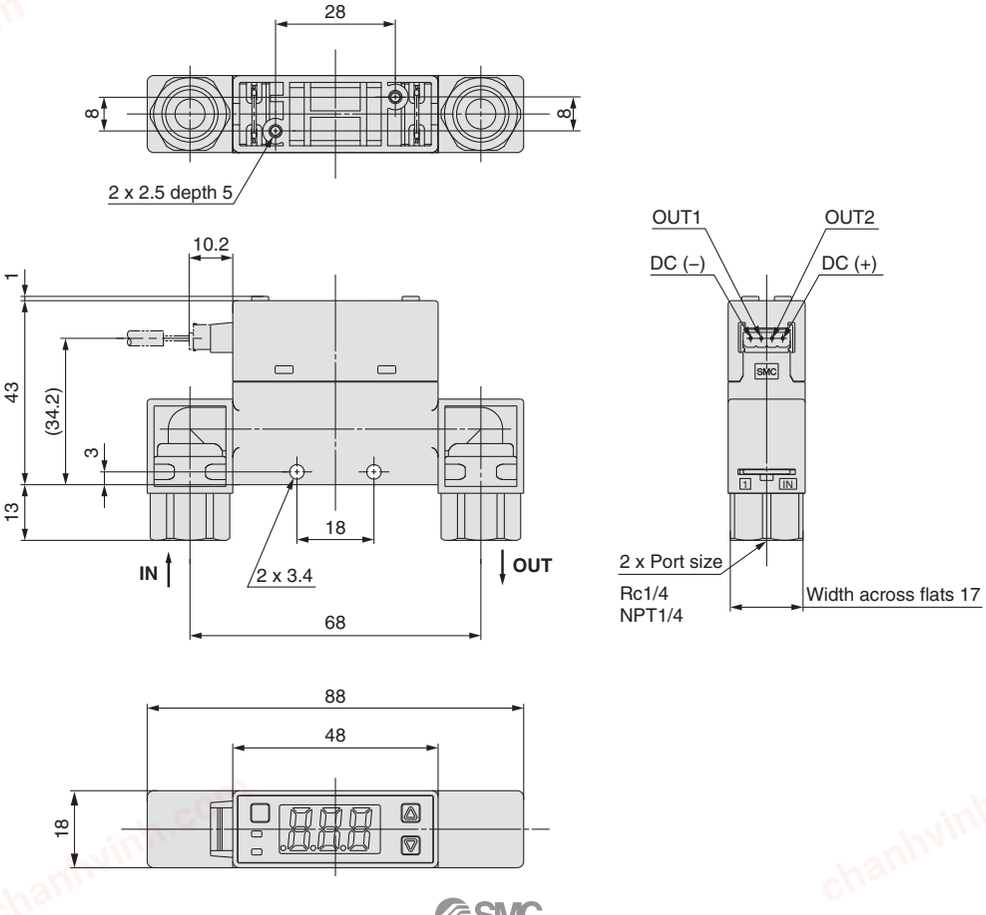

chanhvinh.com

PFMB7 Series

Dimensions

PFMB7201-F02

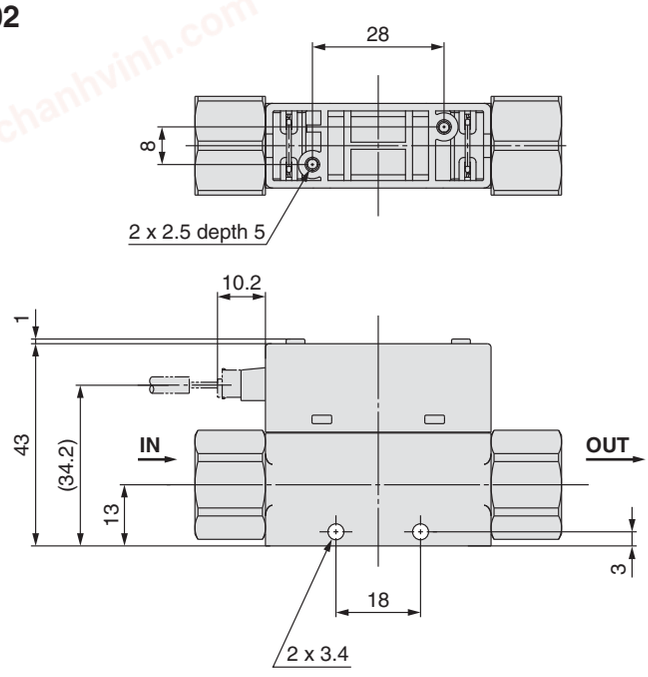

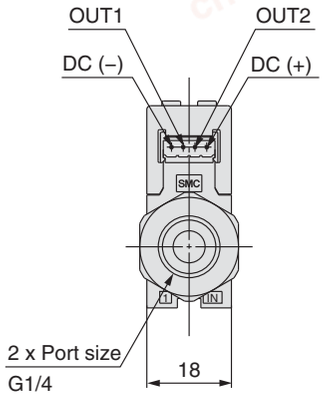

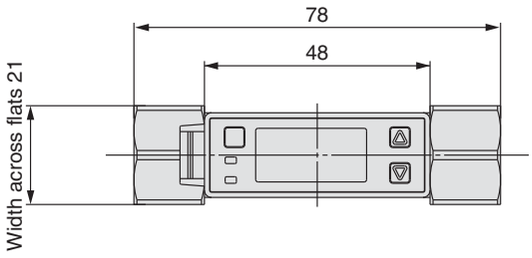

PFMB7201-F02L

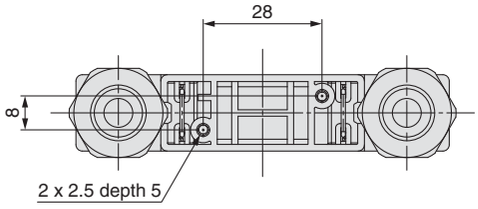

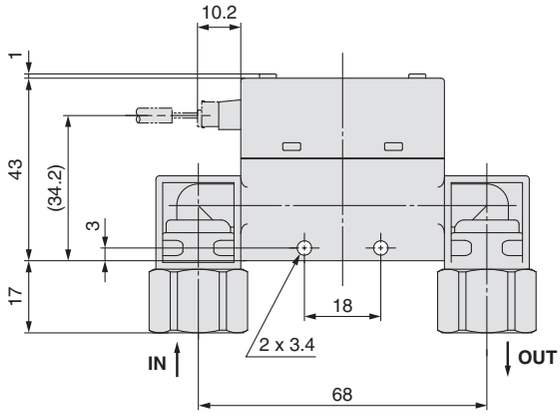

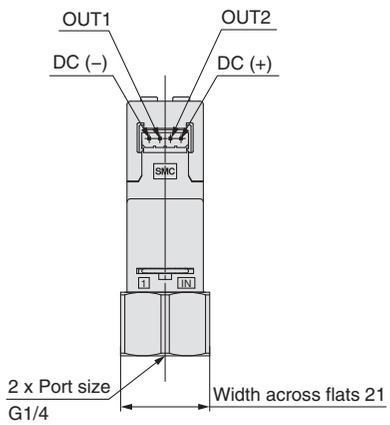

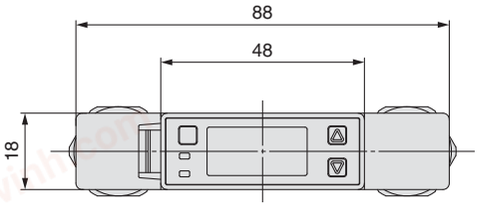

chanhvinh.com

Dimensions

PFMB7201S-C8

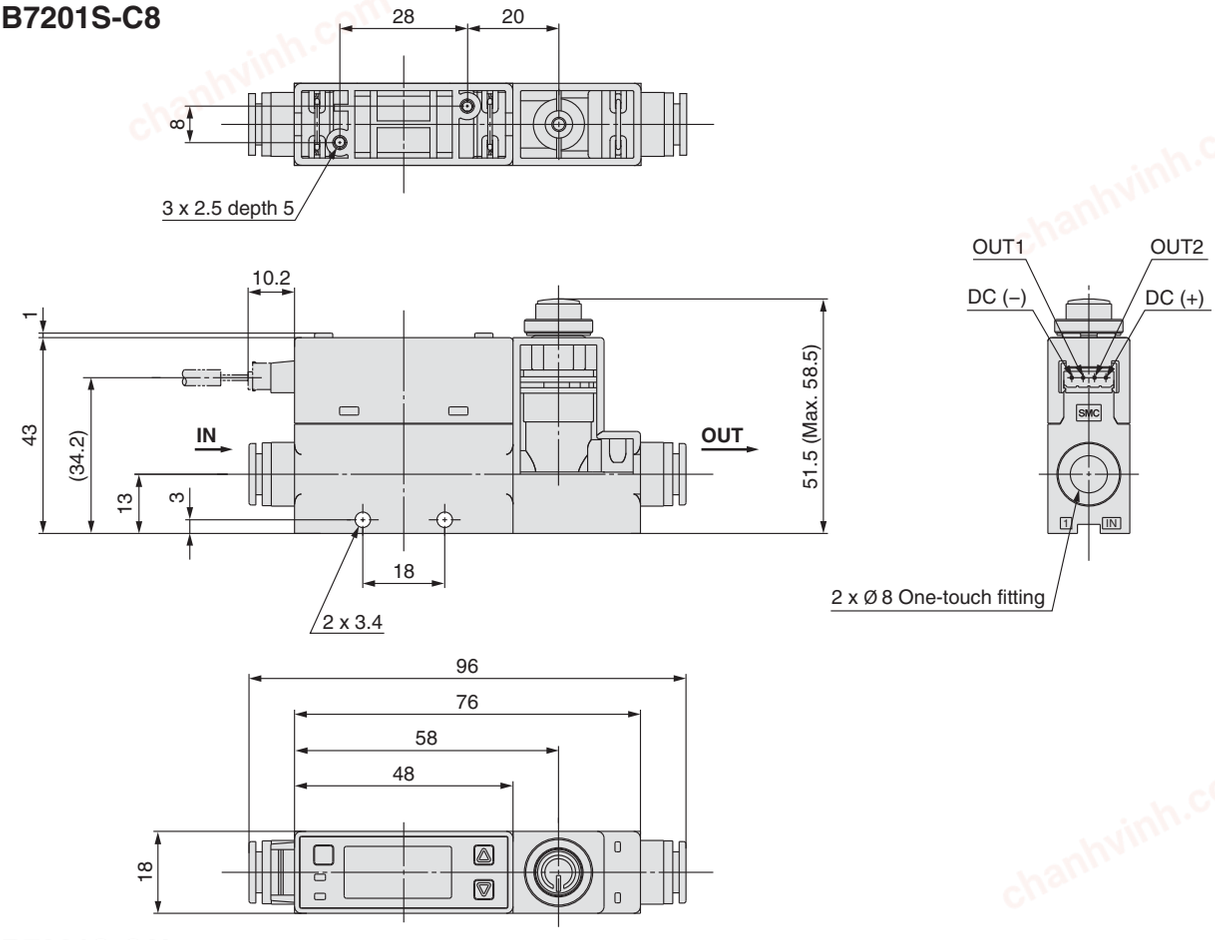

PFMB7201S-C8L

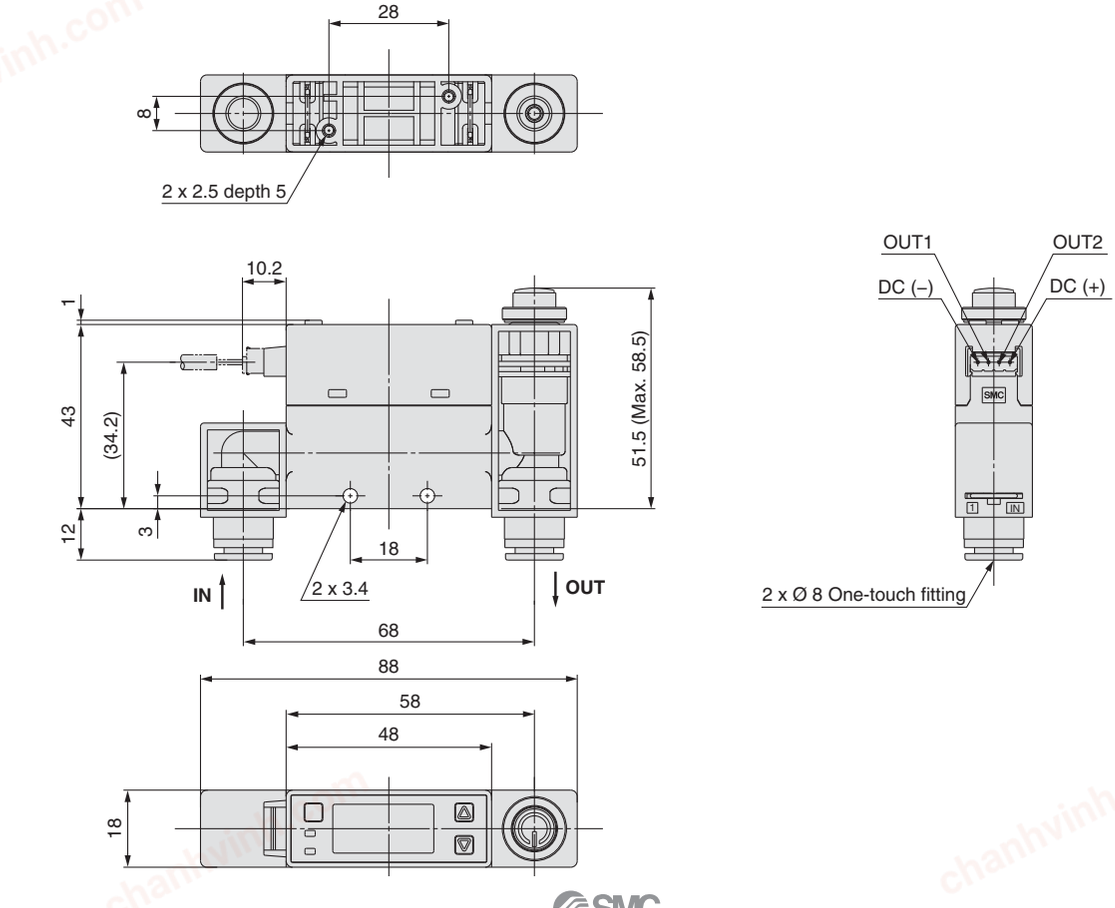

chanhvinh.com

PFMB7 Series

Dimensions

PFMB7201S-(N)02

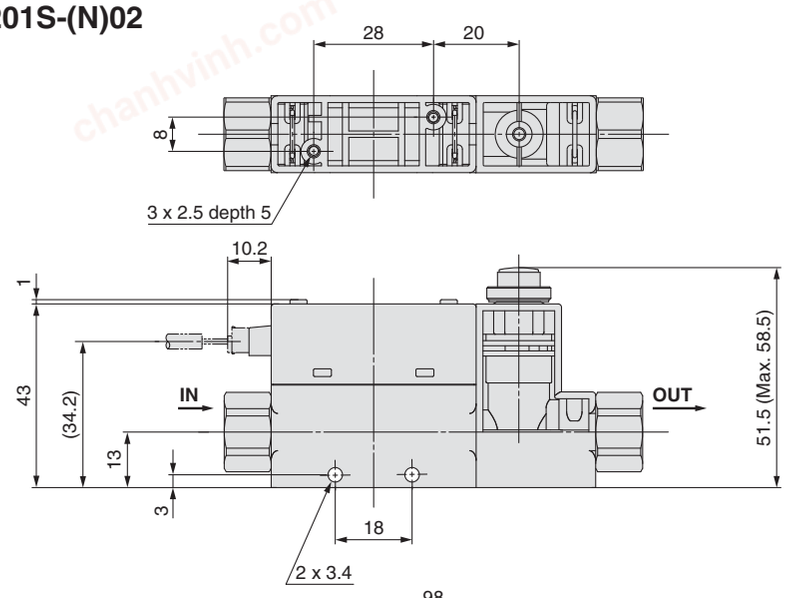

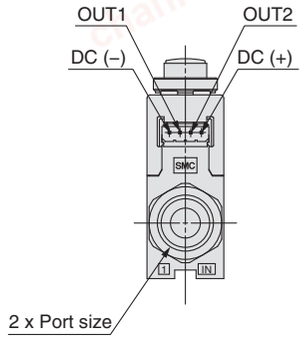

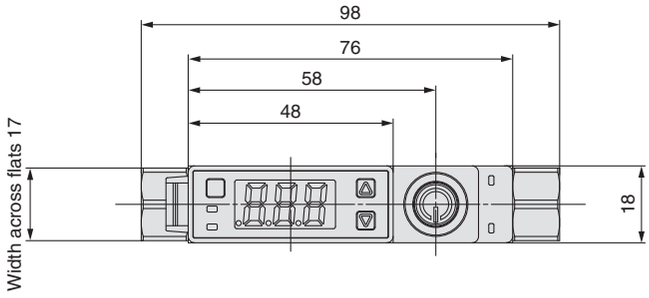

PFMB7201S-(N)02L

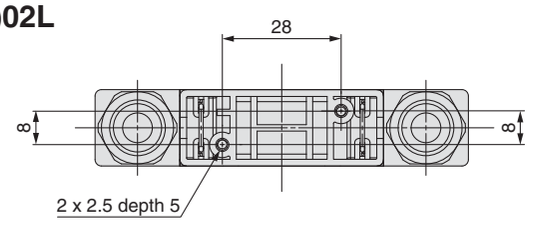

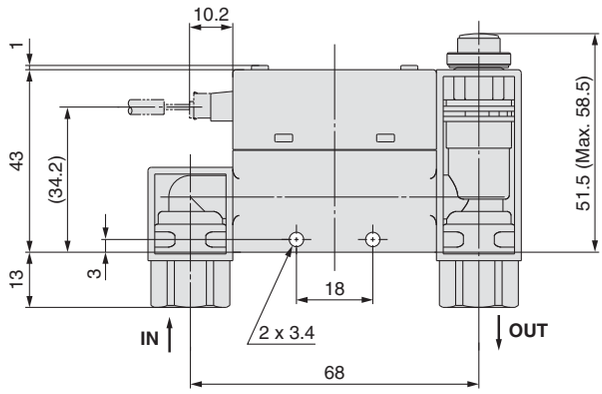

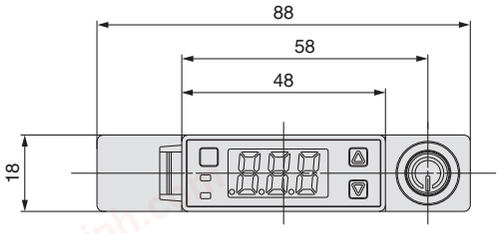

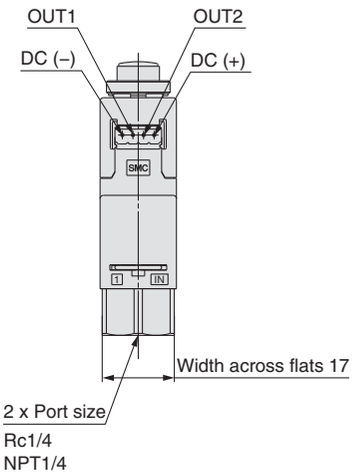

chanhvinh.com

Dimensions

PFMB7201S-F02

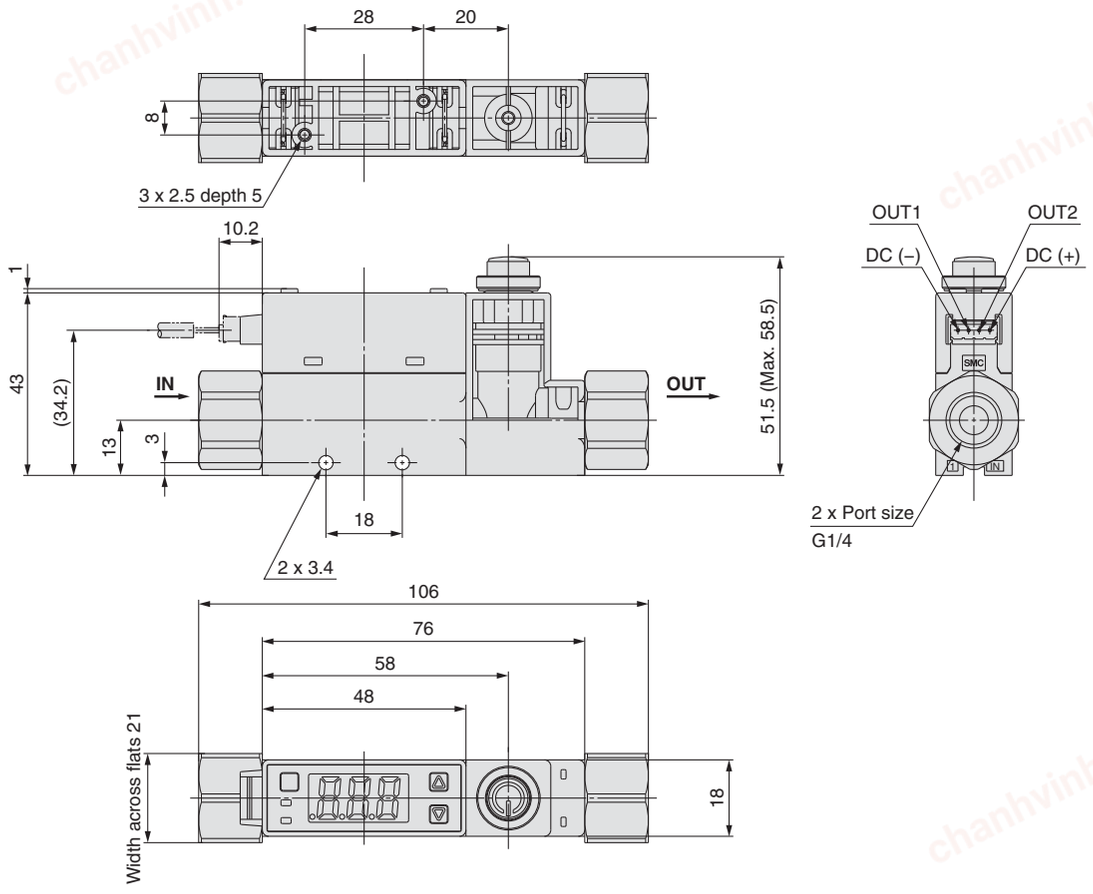

PFMB7201S-F02L

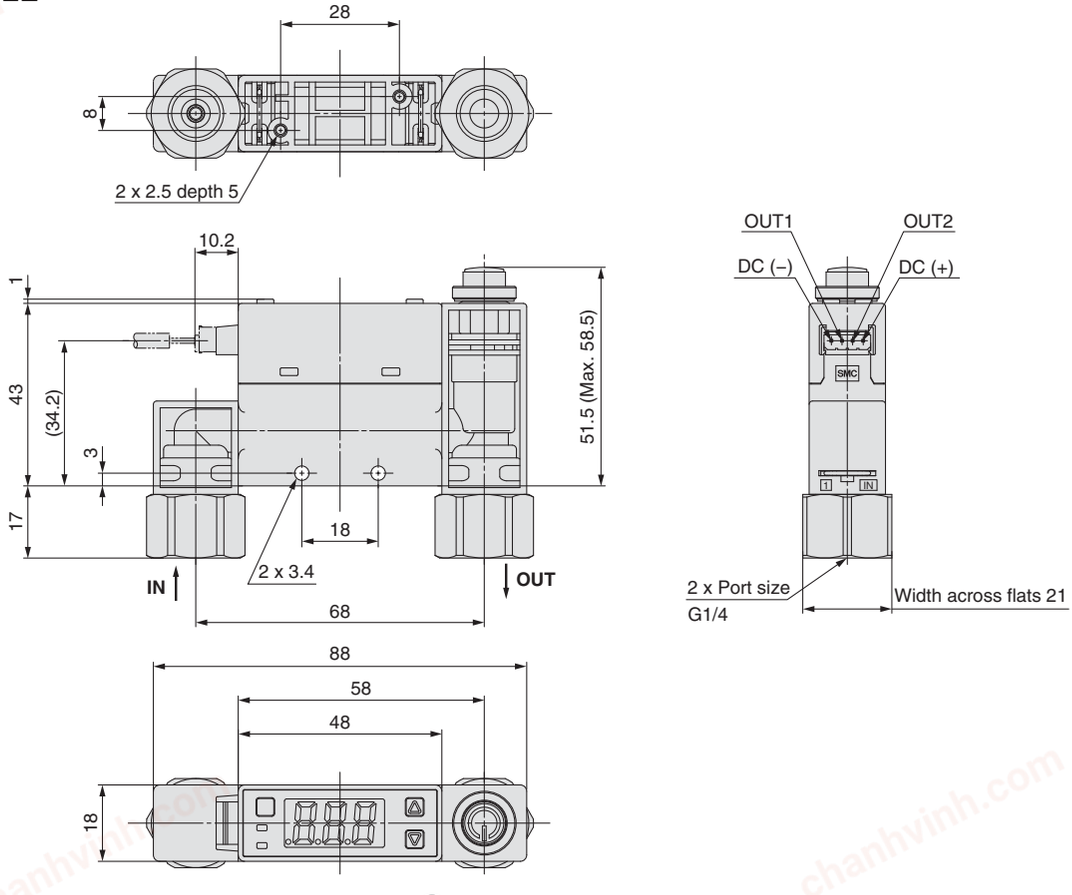

chanhvinh.com

Dimensions

PFMB7201

Panel mount/ Without flow adjustment valve/Straight

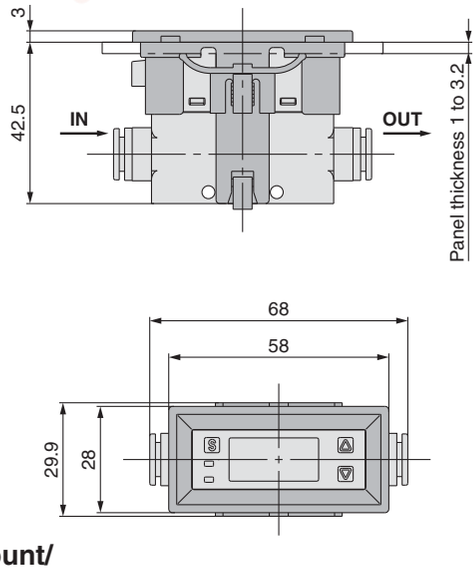

Panel mount/ With flow adjustment valve/Straight

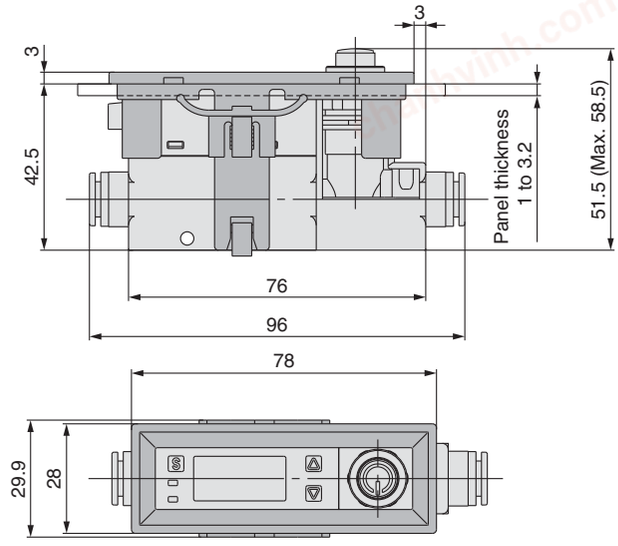

Panel mount/ Without flow adjustment valve/Bottom

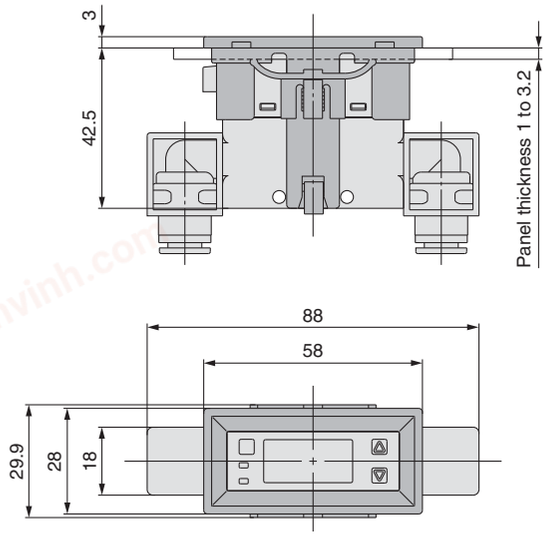

Panel mount/ With flow adjustment valve/Bottom

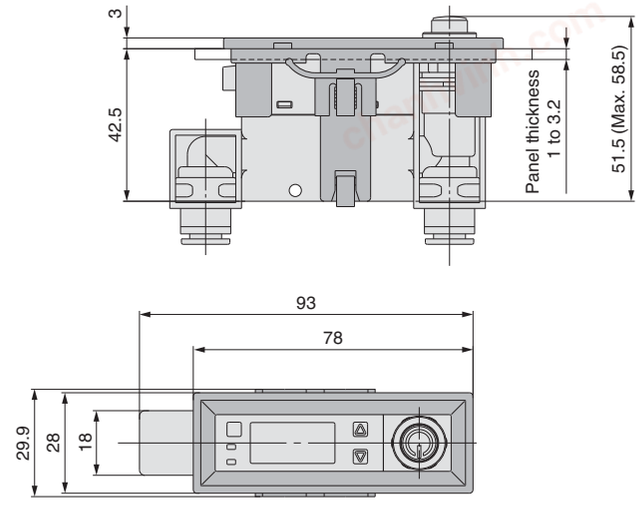

Panel Fitting Dimensions

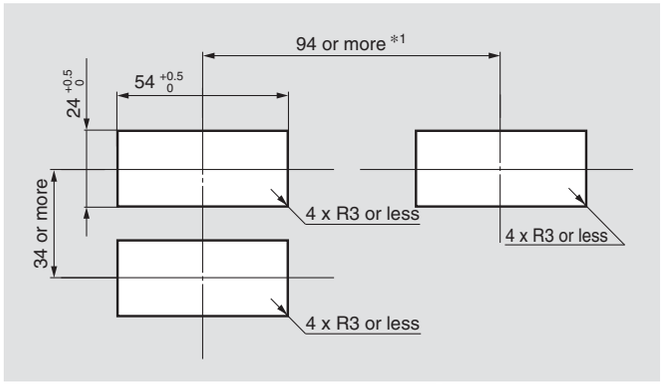

Panel thickness 1 to 3.2 mm

Panel Fitting Dimensions

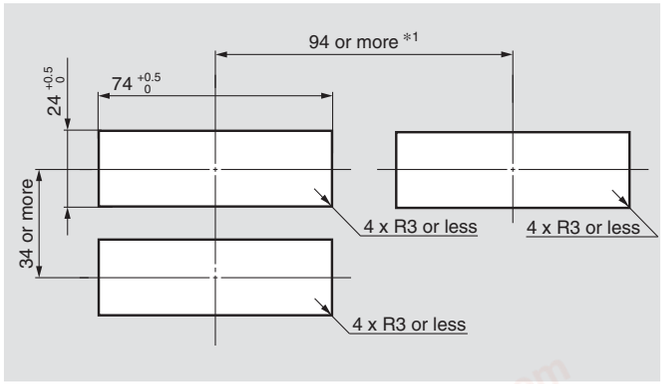

Panel thickness 1 to 3.2 mm

*1 Piping entry direction: Minimum dimensions for bottom piping. If using straight piping, the piping material and tubing need to be taken into consideration when designing the system. If a bend (R) is used, limit it to R3 or less.

*1 Piping entry direction: Minimum dimensions for bottom piping. If using straight piping, the piping material and tubing need to be taken into consideration when designing the system. If a bend (R) is used, limit it to R3 or less.

chanhvinh.com

Dimensions

PFMB7201

With bracket/Without flow adjustment valve

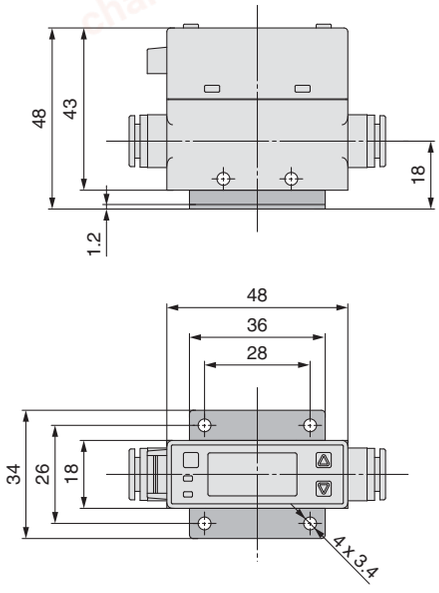

With bracket/With flow adjustment valve

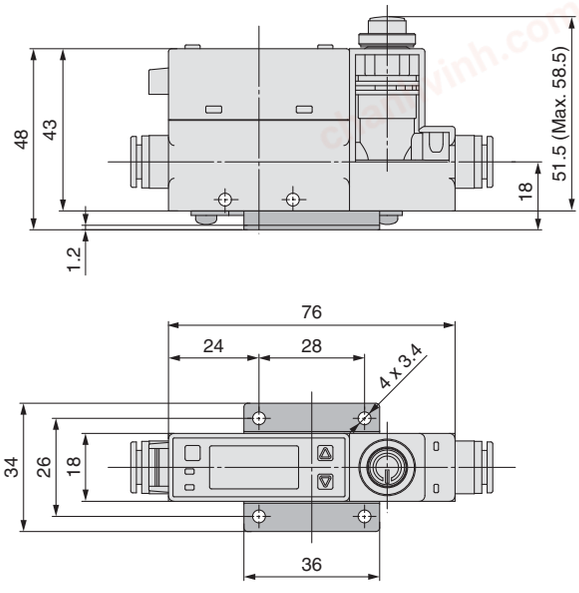

DIN rail mounting

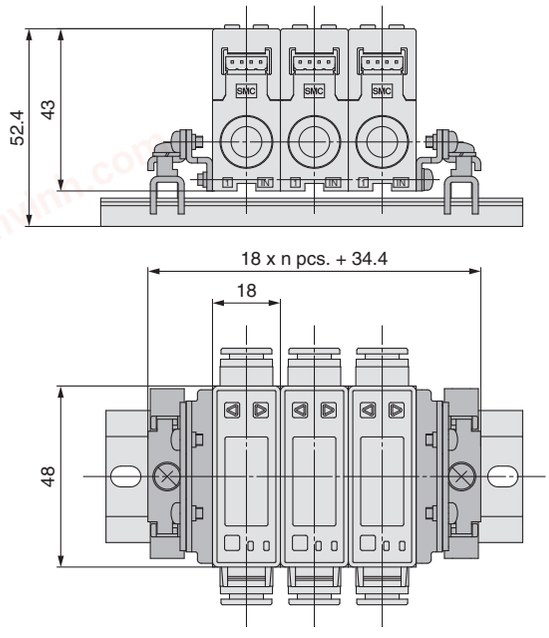

- The DIN rail should be provided by the customer.
- The DIN rail is not suitable for port size F02 (G1/4).

chanhvinh.com

PFMB7 Series

Dimensions

PFMB7501/7102/7202

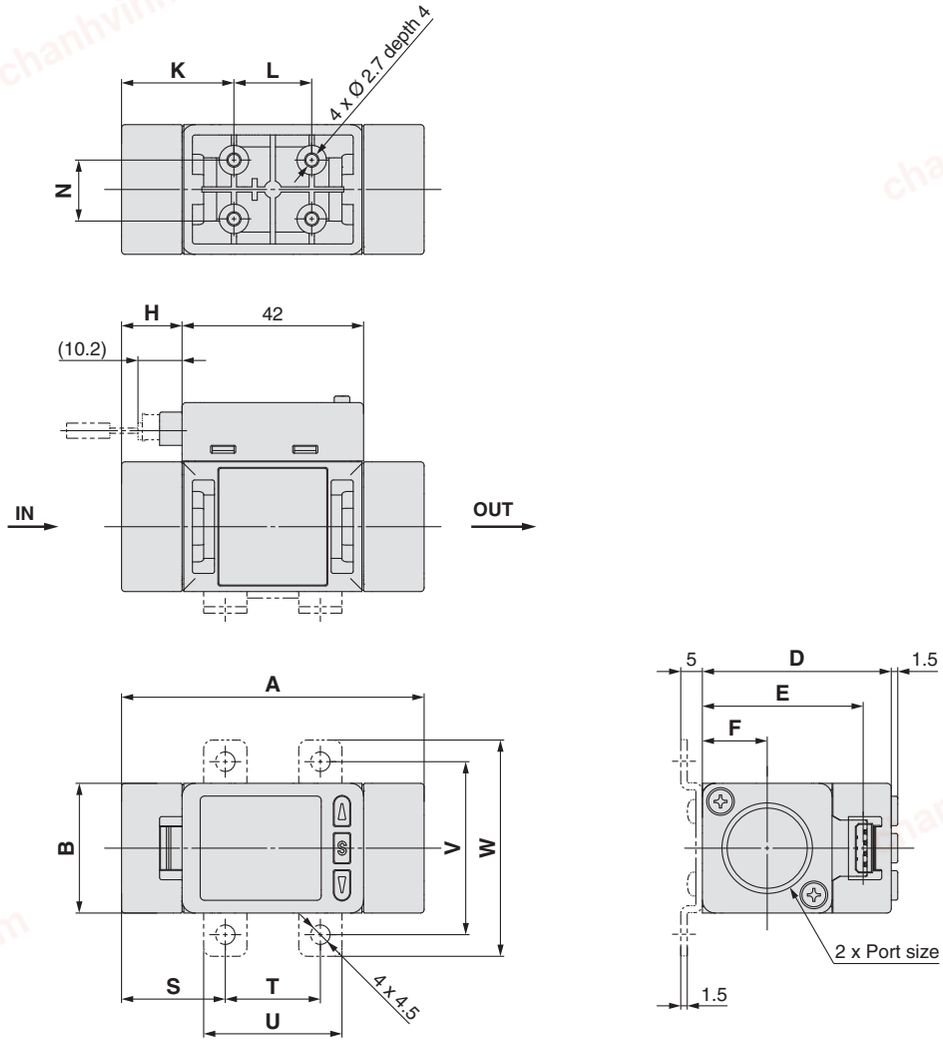

Model \ Symbol	A	B	D	E	F	H	K	L	N
PFMB7501/7102	70	30	43.7	37.2	15	14	26	18	13.6
PFMB7202	90	35	49.2	42.7	17.5	24	31	28	16.8

Model \ Symbol	Bracket dimensions				
	S	**T**	**U**	**V**	**W**
PFMB7501/7102	24	22	32	40	50
PFMB7202	30	30	42	48	58

Lead wire with connector (Part no.: ZS-33-D)

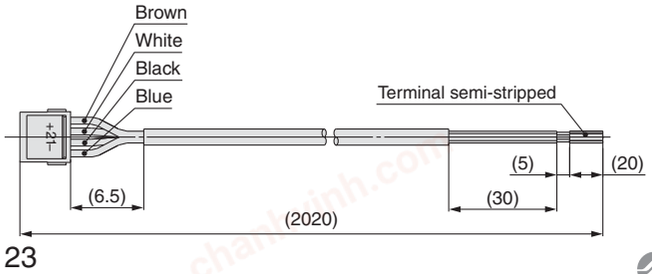

Cable Specifications

Conductor	**Nominal cross section**	AWG26
	Outside diameter	Approx. 0.50 mm
Insulator	**Outside diameter**	Approx. 1.00 mm
	Colour	Brown, White, Black, Blue
Sheath	**Material**	Oil-resistant PVC
Finished outside diameter		Ø 3.5

* For wiring, refer to the “Operation Manual” on the SMC website. Documents/Download --> Instruction Manuals

chanhvinh.com

3-Screen Display

Digital Flow Monitor

PFG300 Series



How to Order

PFG 3 [0] 0 – [RT] – [M] – [L] [ ] [ ] [ ]

Type

3	Remote type monitor unit

Input specification

Symbol	Description	Applicable flow switch model
0	Voltage input	PFMB7□-C/E series
1	Current input	PFMB7□-D/F series

Output specification

RT	2 outputs (NPN/PNP switching type) + Analogue voltage output*1, 2
SV	2 outputs (NPN/PNP switching type) + Analogue current output*2
XY	2 outputs (NPN/PNP switching type) + Copy function

*1 Can switch between 1 to 5 V and 0 to 10 V

*2 Can be switched to external input or copy function

Unit specification

—	Units selection function
M	SI unit only*3

*3 Fixed unit: Instantaneous flow: l/min
Accumulated flow: L

Option 1

Symbol	Description	
—	Without lead wire	
L	Power supply/output connection lead wire (Lead wire length: 2 m)	ZS-46-5L 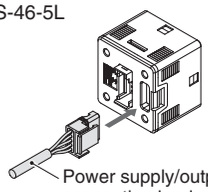 Power supply/output connection lead wire

Option 2

Symbol	Description	
—	None	
A1	Bracket A (Vertical mounting)	ZS-46-A1 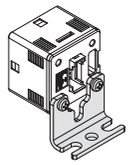
A2	Bracket B (Horizontal mounting)	ZS-46-A2 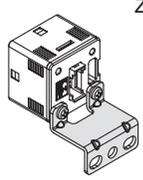
B	Panel mount adapter	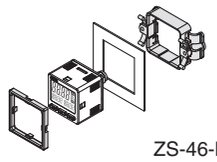 ZS-46-B
D	Panel mount adapter + Front protection cover	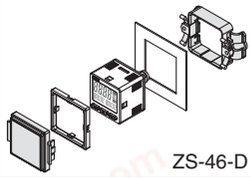 ZS-46-D

Option 3

—	None	
F	ZS-28-C-1	Sensor connector 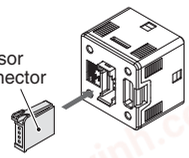

Option 4

	Operation manual	Calibration certificate
—	○	—
Y	—	—
K	○	○
T	—	○

Options/Part Nos.

When only optional parts are required, order with the part numbers listed below.

Part no.	Option	Note
ZS-28-C-1	Sensor connector	For PFMB
ZS-46-A1	Bracket A	Tapping screw: Nominal size 3 x 8 L (2 pcs.)
ZS-46-A2	Bracket B	Tapping screw: Nominal size 3 x 8 L (2 pcs.)
ZS-46-B	Panel mount adapter	
ZS-46-D	Panel mount adapter + Front protection cover	
ZS-46-5L	Power supply/output connection lead wire	5-core, 2 m
ZS-27-01	Front protection cover	

Connection Example

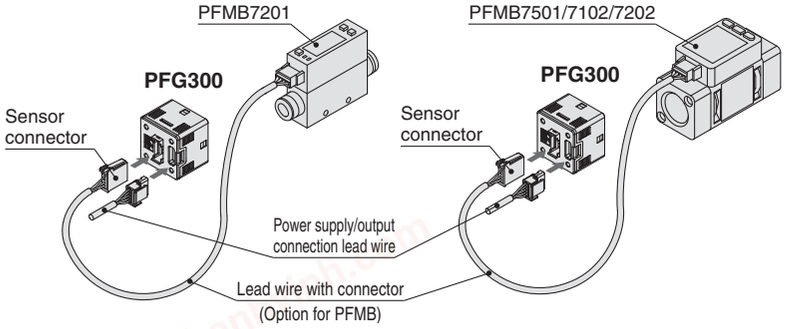

chanhvinh.com

PFG300 Series

Specifications

For flow switch precautions and specific product precautions, refer to the "Operation Manual" on the SMC website.

Model			PFG300 series			
Applicable SMC flow switch	Model		PFMB7201	PFMB7501	PFMB7102	PFMB7202
	Rated flow range*1		2 to 200 l/min	5 to 500 l/min	10 to 1000 l/min	20 to 2000 l/min
Flow	Set point range	Instantaneous flow	-10 to 210 l/min	-25 to 525 l/min	-50 to 1050 l/min	-100 to 2100 l/min
		Accumulated flow	0 to 999,999,999,999 L	0 to 999,999,999,990 L		
	Smallest settable increment	Instantaneous flow	1 l/min			
		Accumulated flow	1 L	10 L		
	Accumulated volume per pulse (Pulse width = 50 ms)		1 L/pulse		10 L/pulse	
	Accumulated value hold function*3		Intervals of 2 or 5 minutes can be selected. The stored accumulated flow is held even when the power supply is OFF.			
Electrical	Power supply voltage		12 to 24 VDC ±10 %			
	Current consumption		25 mA or less			
	Protection		Polarity protection			
Accuracy	Display accuracy		±0.5 % F.S. ± Minimum display unit (Ambient temperature of 25 °C)			
	Analogue output accuracy		±0.5 % F.S. (Ambient temperature of 25 °C)			
	Repeatability		±0.1 % F.S. ± Minimum display unit			
	Temperature characteristics		±0.5 % F.S. (Ambient temperature: 0 to 50 °C, 25 °C standard)			
Switch output	Output type		Select from NPN or PNP open collector output.			
	Output mode		Select from Hysteresis, Window comparator, Accumulated output, Accumulated pulse output, Error output, or Switch output OFF modes.			
	Switch operation		Select from Normal or Reversed output.			
	Max. load current		80 mA			
	Max. applied voltage (NPN only)		30 VDC			
	Internal voltage drop (Residual voltage)		NPN output: 1 V or less (at load current of 80 mA), PNP output: 1.5 V or less (at load current of 80 mA)			
	Response time*2		3 ms or less			
	Delay time*2		Select from 0.00, 0.05 to 0.1 s (increment of 0.01 s), 0.1 to 1.0 s (increment of 0.1 s), 1 to 10 s (increment of 1 s), 20 s, 30 s, 40 s, 50 s, or 60 s			
	Hysteresis*4		Variable from 0			
	Protection		Short circuit protection			
Analogue output*5	Output type		Voltage output: 1 to 5 V, 0 to 10 V (only when the power supply voltage is 24 VDC) Current output: 4 to 20 mA (0 l/min to maximum value of the rated flow)			
	Impedance	Voltage output	Output impedance: 1 kΩ			
		Current output	Maximum load impedance: 300 Ω (at power supply voltage of 12 V), 600 Ω (at power supply voltage of 24 VDC)			
	Response time*2		50 ms or less			
External input*6	External input		Input voltage: 0.4 V or less (Reed or Solid state) for 30 ms or longer			
	Input mode		Select from Accumulated value external reset or Peak/Bottom value reset.			
Sensor input	Input type		Voltage input: 1 to 5 VDC (Input impedance: 1 MΩ), Current input: 4 to 20 mA DC (Input impedance: 51 Ω) (0 l/min to maximum value of the rated flow)			
	Connection method		Connector (e-CON)			
	Protection		Over voltage protection (Up to 26.4 VDC)			
Display	Display mode		Select from Instantaneous flow or Accumulated flow.			
	Unit*7	Instantaneous flow	l/min, cfm (ft³/min)			
		Accumulated flow	L, ft³, L x 10⁶, ft³ x 10⁶			
	Display range	Instantaneous flow	-10 to 210 l/min	-25 to 525 l/min	-50 to 1050 l/min	-100 to 2100 l/min
		Accumulated flow*9	0 to 999,999,999,999 L	0 to 999,999,999,990 L		
	Minimum display unit	Instantaneous flow	1 l/min			
		Accumulated flow	1 L	10 L		
	Display type		LCD			
	Number of displays		3-screen display (Main screen, Sub screen)			
	Display colour		1) Main screen: Red/Green, 2) Sub screen: Orange			
	Number of display digits		1) Main screen: 5 digits (7 segments), 2) Sub screen: 9 digits (7 segments)			
	Indicator LED		LED ON when switch output is ON OUT1/2: Orange			
Digital filter*8			Select from 0.00, 0.05 to 0.1 s (increment of 0.01 s), 0.1 to 1.0 s (increment of 0.1 s), 1 to 10 s (increment of 1 s), 20 s, or 30 s			
Environment	Enclosure		IP40			
	Withstand voltage		1000 VAC for 1 minute between terminals and housing			
	Insulation resistance		50 MΩ or more (500 VDC measured via megohmmeter) between terminals and housing			
	Operating temperature range		Operating: 0 to 50 °C, Stored: -10 to 60 °C (No condensation or freezing)			
	Operating humidity range		Operating/Stored: 35 to 85 % RH (No condensation or freezing)			
Standards			CE, RoHS			
Weight	Body		25 g (Excluding the power supply/output connection lead wire)			
	Lead wire with connector		+39 g			

*1 Rated flow range of the applicable flow switch
*2 Value without digital filter (at 0.00 s)
*3 When using the accumulated value hold function, use the operating conditions to calculate the product life, and do not exceed it. The maximum access limit of the memory device is 1.5 million times. If the product is operated 24 hours per day, the product life will be as follows:
- 5 min interval: life is calculated as 5 min x 1.5 million = 7.5 million min = 14.3 years
- 2 min interval: life is calculated as 2 min x 1.5 million = 3 million min = 5.7 years

If the accumulated value external reset is repeatedly used, the product life will be shorter than the calculated life.

*4 If the flow fluctuates around the set value, the width for setting more than the fluctuating width needs to be set. Otherwise, chattering will occur.
*5 Setting is only possible for models with analogue output.
*6 Setting is only possible for models with external input.
*7 Setting is only possible for models with the units selection function.
*8 The response time indicates when the set value is 90 % in relation to the step input.
*9 The accumulated flow display is the upper 6-digit and lower 6-digit (total of 12 digits) display. When the upper digits are displayed, x 10^6 lights up.
* Products with tiny scratches, marks, or display colour or brightness variations which do not affect the performance of the product are verified as conforming products.

chanhvinh.com

Internal Circuits and Wiring Examples

-XY
-RT
-SV
NPN (2 outputs) + Copy function

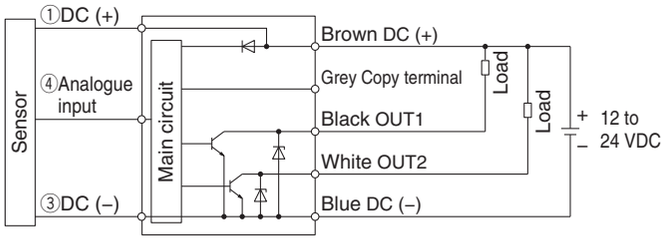

-XY
-RT
-SV
PNP (2 outputs) + Copy function

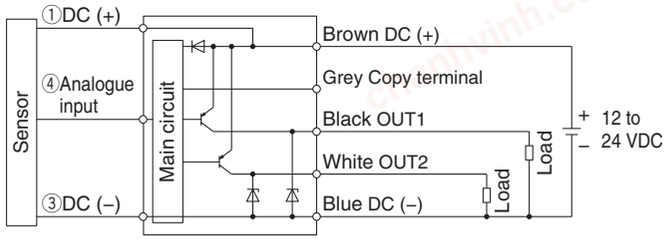

-RT: NPN (2 outputs) + Analogue voltage output
-SV: NPN (2 outputs) + Analogue current output

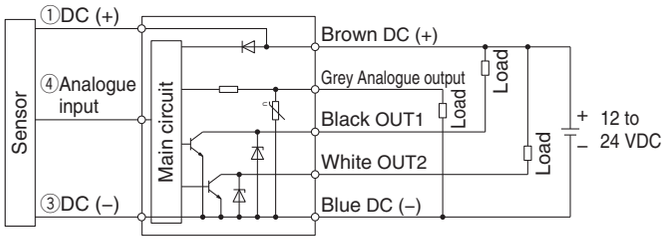

-RT: PNP (2 outputs) + Analogue voltage output
-SV: PNP (2 outputs) + Analogue current output

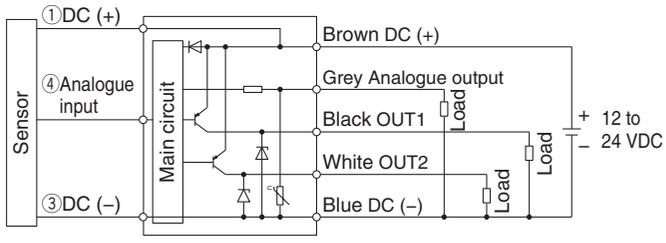

-RT: NPN (2 outputs) + External input
-SV: NPN (2 outputs) + External input

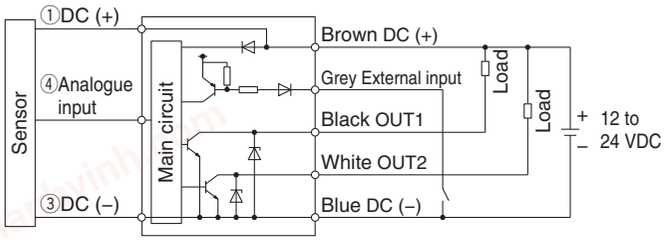

-RT: PNP (2 outputs) + External input
-SV: PNP (2 outputs) + External input

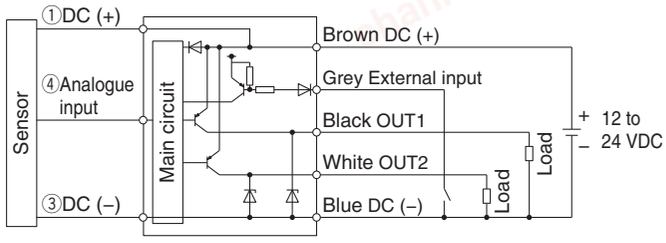

Accumulated pulse output wiring examples

NPN (2 outputs) type

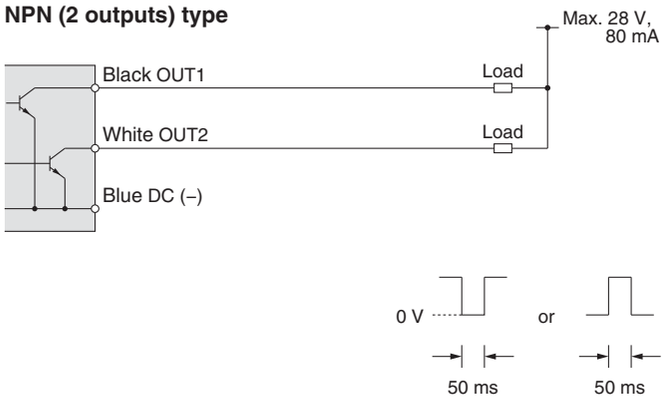

PNP (2 outputs) type

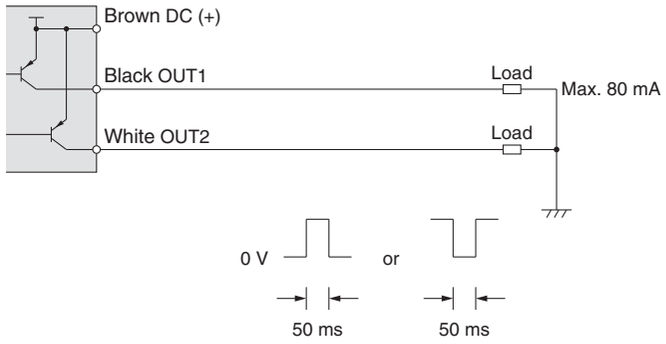

chanhvinh.com

PFG300 Series

Dimensions

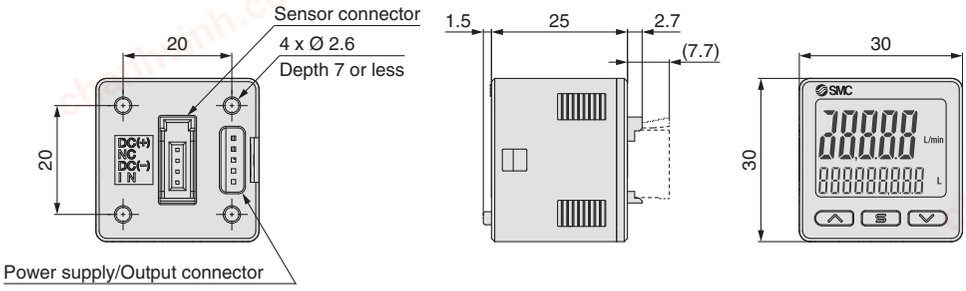

Bracket A (Part no.: ZS-46-A1)

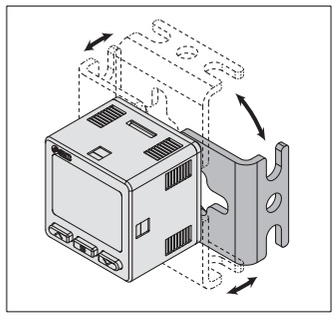

∗ Bracket configuration allows for mounting in four orientations.

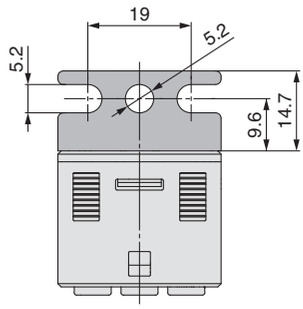

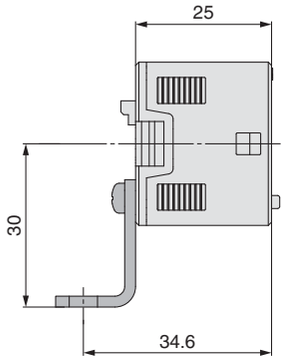

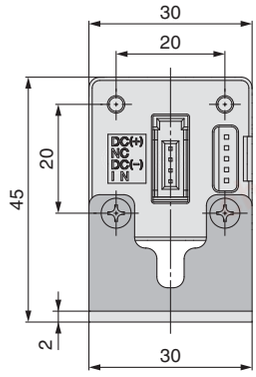

Bracket B (Part no.: ZS-46-A2)

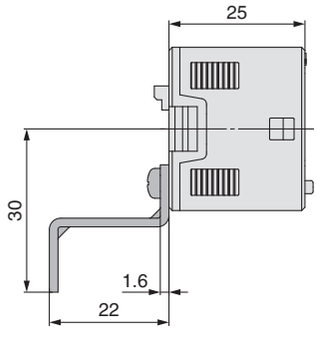

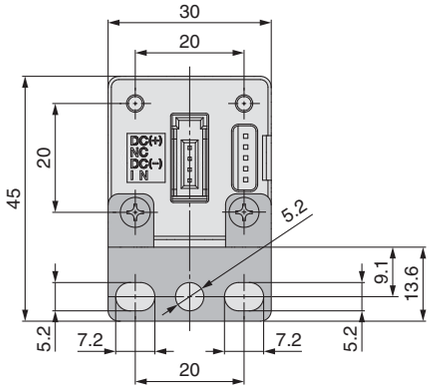

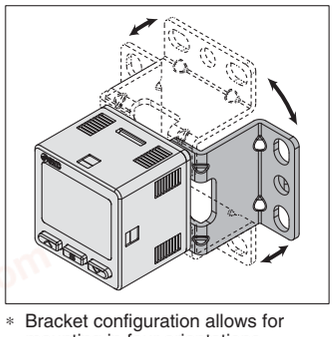

∗ Bracket configuration allows for mounting in four orientations.

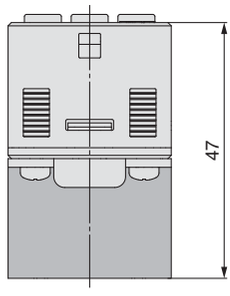

chanhvinh.com

Dimensions

Panel mount adapter (Part no.: ZS-46-B)

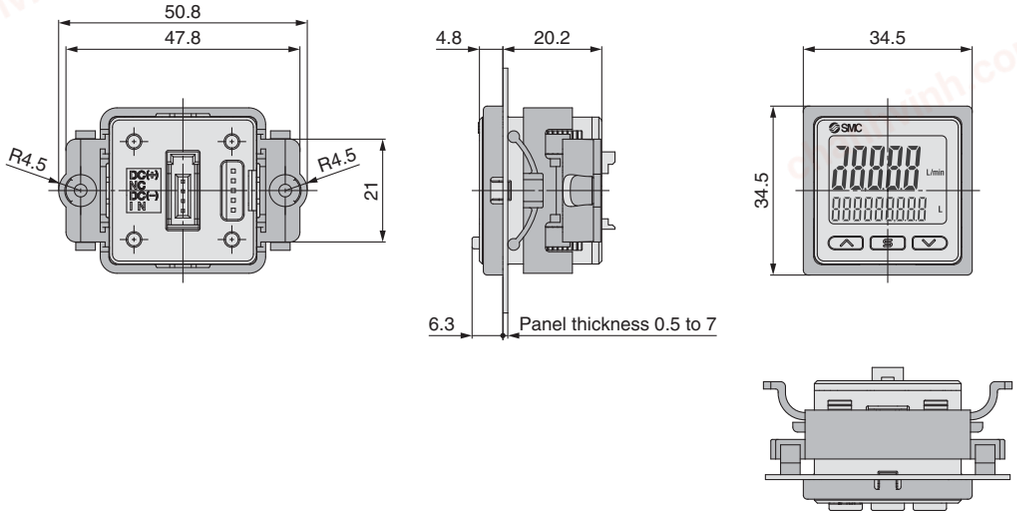

Panel mount adapter + Front protection cover (Part no.: ZS-46-D)

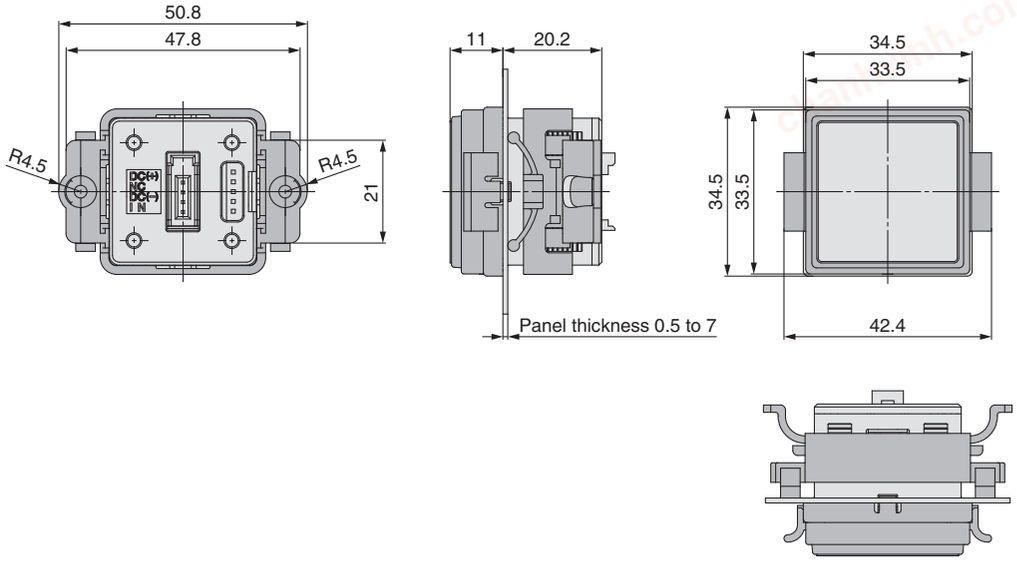

Power supply/output connection lead wire (Part no.: ZS-46-5L)

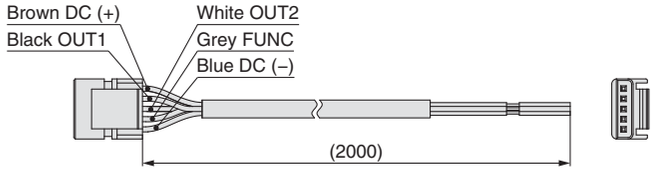

Sensor connector (Part no.: ZS-28-C-1)

Pin no.	Terminal
1	DC (+)
2	N.C.
3	DC (–)
4	IN*1

*1 1 to 5 V or 4 to 20 mA

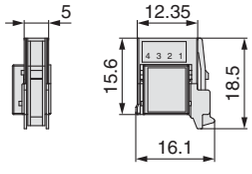

Cable Specifications

Conductor cross section		0.15 mm² (AWG26)
Insulator	**Outside diameter**	1.0 mm
	Colour	Brown, Blue, Black, White, Grey (5-core)
Sheath	**Finished outside diameter**	Ø 3.5

chanhvinh.com

Dimensions

Panel fitting dimensions

Individual mounting

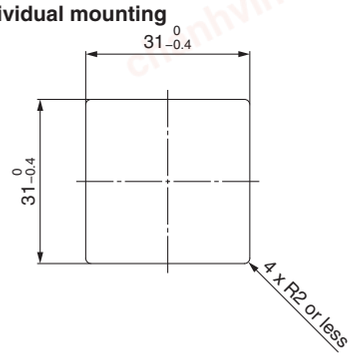

Multiple (2 pcs. or more) secure mounting
<Horizontal>

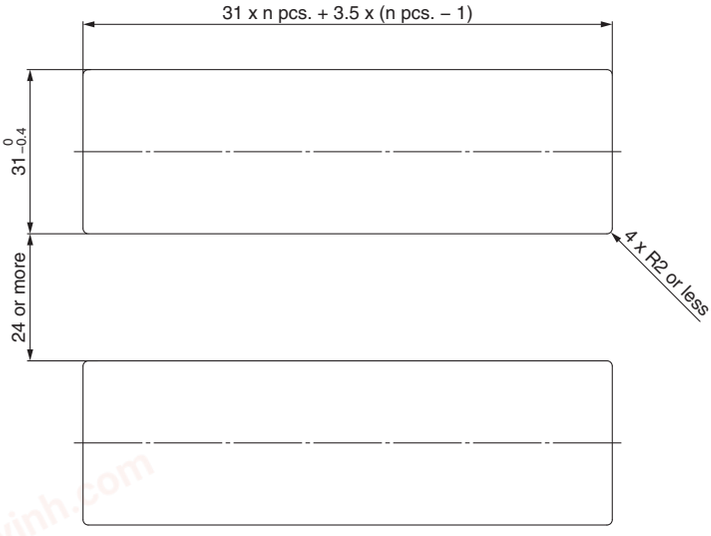

Panel mount example
<Horizontal>

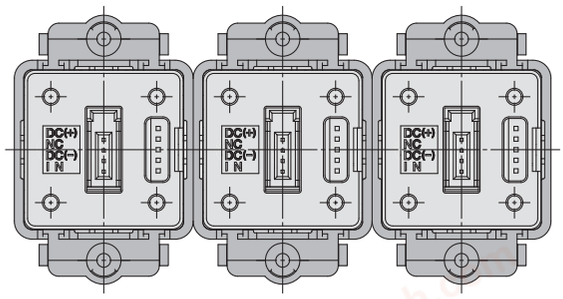

<Vertical>

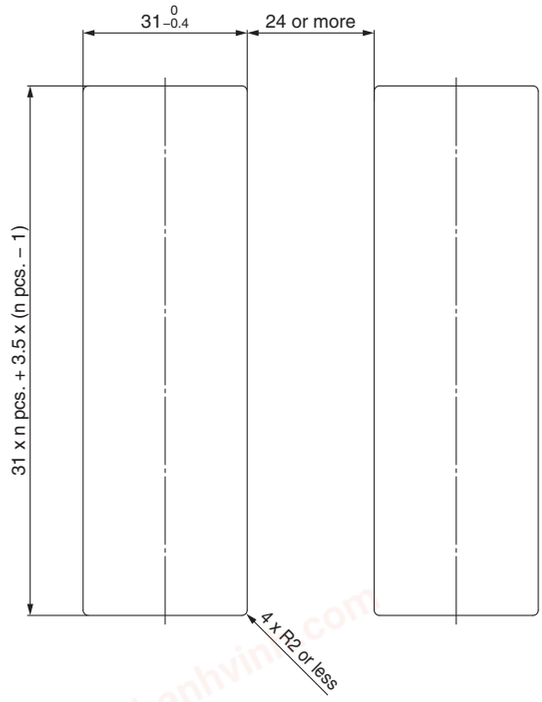

Panel mount example
<Vertical>

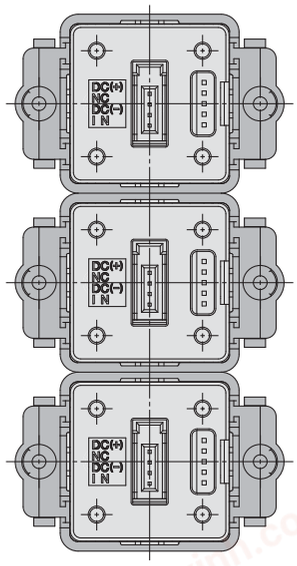

chanhvinh.com

PFMB Series
Function Details

■ Output operation

The output operation can be selected from the following:
Output (hysteresis mode and window comparator mode) corresponding to instantaneous flow or output (accumulated output and pulse output) corresponding to accumulated flow.

(Default setting: Hysteresis mode, Normal output)

■ Display colour

The display colour can be selected for each output condition. The selection of the display colour provides visual identification of abnormal values. (The display colour depends on OUT1 setting.)

Green for ON, Red for OFF
Red for ON, Green for OFF
Red all the time
Green all the time

■ Reference condition

The display unit can be selected from standard condition or normal condition.

Standard condition: Flow rate converted to a volume at 20 °C and 1 atm (atmosphere)
Normal condition: Flow rate converted to a volume at 0 °C and 1 atm (atmosphere)

■ Display mode

The display mode can be selected from instantaneous flow or accumulated flow.

Instantaneous flow display
Accumulated flow display

■ Response time

The response time can be selected to suit the application. (Default setting: 1 s) Abnormalities can be detected more quickly by setting the response time to 0.05 seconds. The effect of fluctuation and flickering of the display can be reduced by setting the response time to 2 seconds.

0.05 s
0.1 s
0.5 s
1 s
2 s

■ Display OFF mode

This function will turn the display OFF. In this mode, decimal points flash on the main screen. If any button is pressed during this mode, the display reverts to normal for 30 seconds to allow checking of the flow, etc.

■ Setting of security code

The user can select whether a security code must be entered to release the key lock. At a time of shipment from the factory, it is set such that a security code is not required.

■ External input function

This function can be used only when the optional external input is present. The accumulated flow, peak value, and bottom value can be reset remotely.

Accumulated value external reset: A function to reset the accumulated flow value when an external input signal is applied.
In accumulated increment mode, the accumulated value will reset to and increase from zero.
In accumulated decrement mode, the accumulated value will reset to and decrease from the set value.

* When the accumulated value is stored to memory, every time the accumulated value external reset is activated, the memory (EEPROM) will be accessed. Take into consideration that the maximum number of times the memory can be accessed is 1 million times. The total number of external inputs and the accumulated value memorising time interval should not exceed 1 million times.

Peak/Bottom value reset: Peak and bottom value are reset.

■ Forced output function

The output is turned on/off in a fixed state when starting the system or during maintenance. This enables confirmation of wiring and prevents system errors due to unexpected output.
For the analogue output type, when ON the output will be 5 V or 20 mA, and when OFF, it will be 1 V or 4 mA.

* Also, an increase or decrease of the flow and temperature will not change the on/off status of the output while the forced output function is activated.

■ Accumulated value hold

The accumulated value is not cleared even when the power supply is turned off. The accumulated value is memorised every 2 or 5 minutes during measurement and continues from the last memorised value when the power supply is turned on again.
The life time of the memory device is 1 million access times. Take this into consideration before using this function.

■ Peak/Bottom value display

The maximum (minimum) flow rate is detected and updated from when the power supply is turned on. In peak (bottom) value display mode, this maximum (minimum) flow rate is displayed.

■ Keylock function

Prevents operation errors such as accidentally changing setting values

■ Analogue output free range function

This function allows a flow that generates an output of 5 V or 20 mA to be changed. The value can be changed between 10 % of the maximum value of the rated flow and the maximum value of the display range.

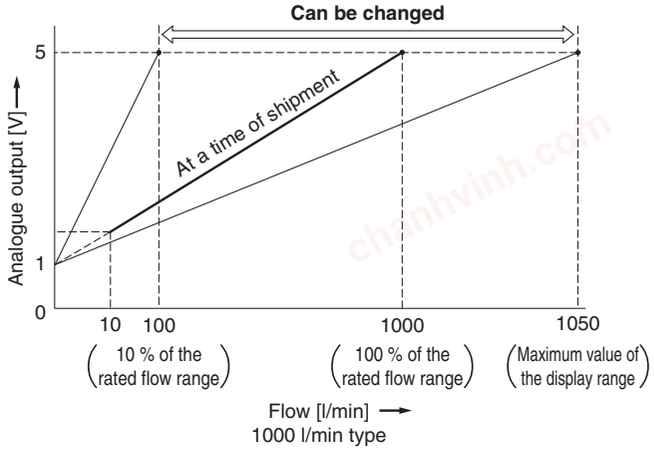

■ Reversible display mode

When the switch is used upside down, the orientation of the display can be rotated to make it easier to read by using the reversible display function.

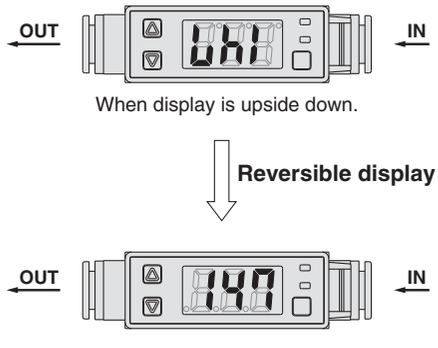

■ Reset to the default settings

The product can be returned to its factory default settings.

chanhvinh.com

■ Error display function

When an error or abnormality arises, the location and contents are displayed.

Display		Error name	Description	Action
Er1		OUT1 over current error	A load current of 80 mA or more is applied to the switch output (OUT1).	Eliminate the cause of the over current by turning off the power supply and then turning it on again.
Er2		OUT2 over current error	A load current of 80 mA or more is applied to the switch output (OUT2).	
HHH		Instantaneous flow error	The flow rate exceeds the maximum value of the display range.	Decrease the flow rate.
LLL		Reverse flow error	There is a reverse flow equivalent to -5 % or more.	Change the flow to the correct direction.
999999999 ("999" will flash in any of upper, middle, lower 3-digit displays.)	PFMB7201 PFMB7501 PFMB7102	Accumulated flow error	The flow rate exceeds the accumulated flow rate range.	Clear the accumulated flow rate.
Er0		System error	Internal data error	Turn the power off and then on again.
Er4				
Er6				
Er8				

If the error cannot be solved after the instructions above are performed, please contact SMC for investigation.

⚠ Precautions on piping

Piping for the metal attachment

- Tighten to the specified torque. Refer to the table below for the required torque values.
- Use a wrench suited for the required torque. Do not use an extremely large wrench (Total length of 40 cm or more).
- If the tightening torque is exceeded, the product can be broken.
  If the tightening torque is insufficient, the fitting may become loose.
- Avoid any sealant tape getting inside the flow path.
- Ensure there is no leakage after piping.
- When mounting the fitting, a wrench should be used on the metal part (attachment) of the fitting only.
  Holding other parts of the product with a wrench may damage the product.
  Specifically, make sure that the wrench does not damage the connector.

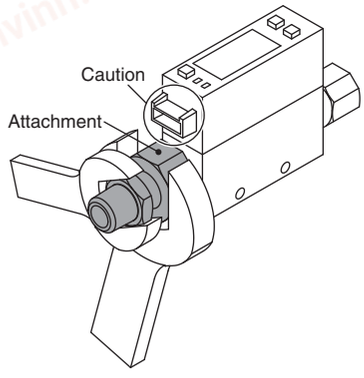

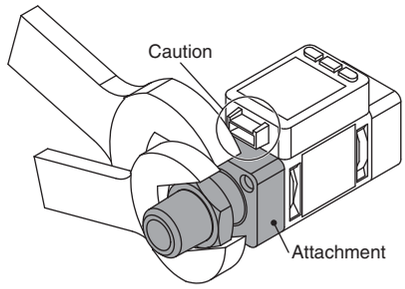

Model	Required torque
PFMB7201	12 to 14 N·m
PFMB7501	28 to 30 N·m
PFMB7102	
PFMB7202	

Model	Nominal thread size	Width across flats of attachment
PFMB7201	Rc1/4, NPT1/4	17 mm
	G1/4	21 mm
PFMB7501	1/2	30 mm
PFMB7102		
PFMB7202	3/4	35 mm

chanhvinh.com

PFG300 Series
Function Details

■ Output operation

The output operation can be selected from the following:
Output (hysteresis mode and window comparator mode) corresponding to instantaneous flow or output (accumulated output and pulse output) corresponding to accumulated flow.

(Default setting: Hysteresis mode, Normal output)

■ Simple setting mode

Only the set values for instantaneous flow and accumulated flow can be changed. Output mode, output type, display colour, and accumulate pulse output cannot be changed.

■ Display colour

The display colour can be selected for each output condition. The selection of the display colour provides visual identification of abnormal values.

Green for ON, Red for OFF
Red for ON, Green for OFF
Red all the time
Green all the time

■ Delay time setting

The time from when the instantaneous flow reaches the set value to when the switch output operates can be set. Setting the delay time can prevent the switch output from chattering.

(Default setting: 0 s)

0.00 s
0.05 to 0.1 s (increment of 0.01 s)
0.1 to 1.0 s (increment of 0.1 s)
1 to 10 s (increment of 1 s)
20 s
30 s
40 s
50 s
60 s

■ Digital filter setting

The time for the digital filter can be set to the sensor input. Setting the digital filter can reduce chattering of the switch output and flickering of the analogue output and the display.

The response time indicates when the set value is 90 % in relation to the step input.

(Default setting: 0 s)

0.00 s
0.05 to 0.1 s (increment of 0.01 s)
0.1 to 1.0 s (increment of 0.1 s)
1 to 10 s (increment of 1 s)
20 s
30 s

■ FUNC output switching function

Analogue output, external input, or copy function can be selected.
(Default setting: Analogue output)

■ Selectable analogue output function

1 to 5 V or 0 to 10 V can be selected for the analogue voltage output type. (Default setting: 1 to 5 V)

■ External input function

The accumulated flow, peak value, and bottom value can be reset remotely.

Accumulated value external reset: A function to reset the accumulated flow value when an external input signal is applied.
In accumulated increment mode, the accumulated value will reset to and increase from zero.
In accumulated decrement mode, the accumulated value will reset to and decrease from the set value.

* When the accumulated value is stored to memory, every time the accumulated value external reset is activated, the memory will be accessed. Take into consideration that the maximum number of times the memory can be accessed is 1.5 million times. The total number of external inputs and the accumulated value memorising time interval should not exceed 1.5 million times.

Peak/Bottom value reset: Peak and bottom value are reset.

■ Forced output function

The output is turned on/off in a fixed state when starting the system or during maintenance. This enables the confirmation of wiring and prevents system errors due to unexpected output.
For the analogue output type: When ON, the output will be 5 V (or 10 V when 0 to 10 V is selected) or 20 mA, and when OFF, 1 V (or 0 V when 0 to 10 V is selected) or 4 mA.

* Also, an increase or decrease of the flow will not change the on/off status of the output while the forced output function is activated.

■ Accumulated value hold

The accumulated value is not cleared even when the power supply is turned off. The accumulated value is memorised every 2 or 5 minutes during measurement and continues from the last memorised value when the power supply is turned on again.
The maximum writable limit of the memory device is 1.5 million times, which should be taken into consideration.

■ Peak/Bottom value display

The maximum (minimum) flow rate is detected and updated from when the power supply is turned on. In peak (bottom) value display mode, this maximum (minimum) flow rate is displayed.

■ Setting of security code

The user can select whether a security code must be entered to release the key lock. At a time of shipment from the factory, it is set such that a security code is not required.

■ Keylock function

Prevents operation errors such as accidentally changing setting values

■ Reset to the default settings

The product can be returned to its factory default settings.

■ Display with zero cut-off setting

When the flow is close to 0 l/min, the product will round the value down and zero will be displayed. A flow value may be displayed even when the flow rate is 0 l/min due to high pressure or depending on the installation. The zero cut function will force the display to zero. The range to display zero can be changed.

chanhvinh.com

■ Selection of display on sub screen

The display on the sub screen in measuring mode can be set.



Set value display	Accumulated value display	Peak value display
Displays the set value	Displays the accumulated value	Displays the peak value
		
Bottom value display	**Line name display**	**OFF**
Displays the bottom value	Displays the line name (Up to 5 alphanumeric characters can be input.)	Displays nothing
		

■ Analogue output free range function

This function allows a flow that generates an output of 5 V (or 10 V when 0 to 10 V is selected) or 20 mA to be changed. The value can be changed between 10 % of the maximum value of the rated flow and the maximum value of the display range.

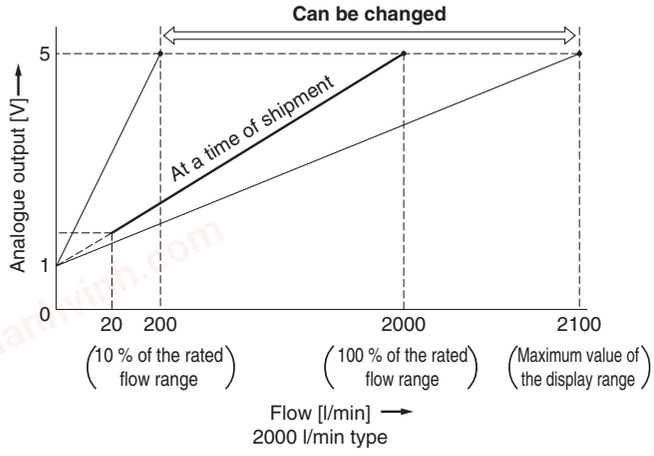

For analogue voltage output of 0 to 10 V

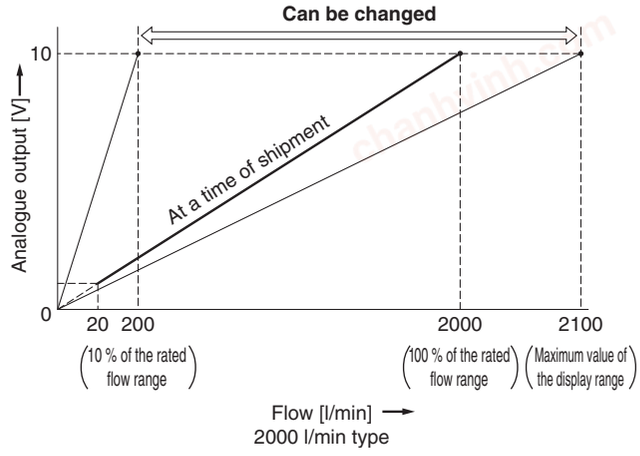

■ Error display function

When an error or abnormality arises, the location and contents are displayed.

Display	Error name	Description	Action
Er 1 Er2	OUT over current error	A load current of 80 mA or more is applied to the switch output (OUT).	Eliminate the cause of the over current by turning off the power supply and then turning it on again.
HHH	Instantaneous flow error	The flow rate exceeds the maximum value of the display range.	Decrease the flow rate.
LLL	Reverse flow error	There is a reverse flow equivalent to –5 % or more.	Change the flow to the correct direction.
999999 flashes x 10^6	Accumulated flow error	The flow rate exceeds the accumulated flow rate range.	Clear the accumulated flow rate.
Er0	System error	Internal data error	Turn the power off and then on again.
Er4			
Er6			
Er7			
Er8			
Er 14			
Er40			
Er 13	Copy error	The copy function does not operate properly.	After clearing the error by pressing the ▲ and ▼ buttons simultaneously for a minimum of 1 second, check the wiring and the model, and then attempt to copy again.

If the error cannot be solved after the instructions above are performed, please contact SMC for investigation.

chanhvinh.com

■ Copy function

The settings of the master monitor can be copied to the slave monitors, reducing setting labour and minimizing the risk of setting mistakes.

The set value can be copied to up to 10 flow monitors simultaneously. (Maximum transmission distance: 4 m)

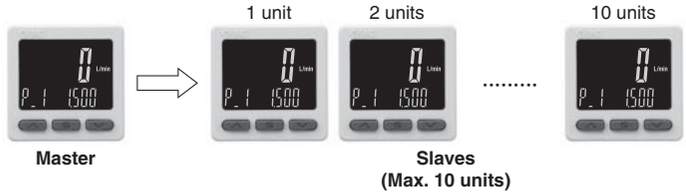

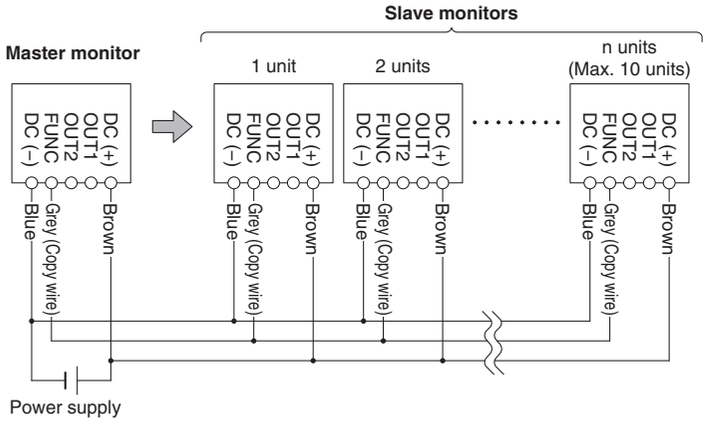

1) Wire as shown in the figure on the left.
2) Select the slave monitor which is to be the master, and change it into a master using the buttons. (In the default setting, all flow monitors are set as slaves.)
3) Press the S button on the master monitor to start copying.

■ Selection of power saving mode

Power saving mode can be selected.
It shifts to the power saving mode without button operation for 30 seconds.
It is set to the normal mode (Power saving mode is OFF.) at a time of shipment from the factory.
(During power saving mode, [ECo] will flash in the sub screen and the operation light is ON (only when the switch is ON).)

* There may be a difference in the displayed value on the connected flow switch and the flow monitor. When the flow monitor display is being used, it is recommended to set the flow switch display to OFF mode.

chanhvinh.com

⚠ Safety Instructions

These safety instructions are intended to prevent hazardous situations and/or equipment damage. These instructions indicate the level of potential hazard with the labels of **"Caution," "Warning"** or **"Danger."** They are all important notes for safety and must be followed in addition to International Standards (ISO/IEC)*1), and other safety regulations.

⚠ Caution: **Caution** indicates a hazard with a low level of risk which, if not avoided, could result in minor or moderate injury.

⚠ Warning: **Warning** indicates a hazard with a medium level of risk which, if not avoided, could result in death or serious injury.

⚠ Danger : **Danger** indicates a hazard with a high level of risk which, if not avoided, will result in death or serious injury.

*1) ISO 4414: Pneumatic fluid power – General rules relating to systems.
ISO 4413: Hydraulic fluid power – General rules relating to systems.
IEC 60204-1: Safety of machinery – Electrical equipment of machines. (Part 1: General requirements)
ISO 10218-1: Manipulating industrial robots - Safety.
etc.

⚠ Warning

1. The compatibility of the product is the responsibility of the person who designs the equipment or decides its specifications.
Since the product specified here is used under various operating conditions, its compatibility with specific equipment must be decided by the person who designs the equipment or decides its specifications based on necessary analysis and test results. The expected performance and safety assurance of the equipment will be the responsibility of the person who has determined its compatibility with the product. This person should also continuously review all specifications of the product referring to its latest catalogue information, with a view to giving due consideration to any possibility of equipment failure when configuring the equipment.

2. Only personnel with appropriate training should operate machinery and equipment.
The product specified here may become unsafe if handled incorrectly. The assembly, operation and maintenance of machines or equipment including our products must be performed by an operator who is appropriately trained and experienced.

3. Do not service or attempt to remove product and machinery/equipment until safety is confirmed.
1. The inspection and maintenance of machinery/equipment should only be performed after measures to prevent falling or runaway of the driven objects have been confirmed.
2. When the product is to be removed, confirm that the safety measures as mentioned above are implemented and the power from any appropriate source is cut, and read and understand the specific product precautions of all relevant products carefully.
3. Before machinery/equipment is restarted, take measures to prevent unexpected operation and malfunction.

4. Contact SMC beforehand and take special consideration of safety measures if the product is to be used in any of the following conditions.
1. Conditions and environments outside of the given specifications, or use outdoors or in a place exposed to direct sunlight.
2. Installation on equipment in conjunction with atomic energy, railways, air navigation, space, shipping, vehicles, military, medical treatment, combustion and recreation, or equipment in contact with food and beverages, emergency stop circuits, clutch and brake circuits in press applications, safety equipment or other applications unsuitable for the standard specifications described in the product catalogue.
3. An application which could have negative effects on people, property, or animals requiring special safety analysis.
4. Use in an interlock circuit, which requires the provision of double interlock for possible failure by using a mechanical protective function, and periodical checks to confirm proper operation.

⚠ Caution

1. The product is provided for use in manufacturing industries.
The product herein described is basically provided for peaceful use in manufacturing industries.
If considering using the product in other industries, consult SMC beforehand and exchange specifications or a contract if necessary.
If anything is unclear, contact your nearest sales branch.

Limited warranty and Disclaimer/ Compliance Requirements

The product used is subject to the following "Limited warranty and Disclaimer" and "Compliance Requirements". Read and accept them before using the product.

Limited warranty and Disclaimer

1. The warranty period of the product is 1 year in service or 1.5 years after the product is delivered, wichever is first.*2) Also, the product may have specified durability, running distance or replacement parts. Please consult your nearest sales branch.
2. For any failure or damage reported within the warranty period which is clearly our responsibility, a replacement product or necessary parts will be provided. This limited warranty applies only to our product independently, and not to any other damage incurred due to the failure of the product.
3. Prior to using SMC products, please read and understand the warranty terms and disclaimers noted in the specified catalogue for the particular products.

*2) **Vacuum pads are excluded from this 1 year warranty.** A vacuum pad is a consumable part, so it is warranted for a year after it is delivered. Also, even within the warranty period, the wear of a product due to the use of the vacuum pad or failure due to the deterioration of rubber material are not covered by the limited warranty.

Compliance Requirements

1. The use of SMC products with production equipment for the manufacture of weapons of mass destruction (WMD) or any other weapon is strictly prohibited.
2. The exports of SMC products or technology from one country to another are governed by the relevant security laws and regulations of the countries involved in the transaction. Prior to the shipment of a SMC product to another country, assure that all local rules governing that export are known and followed.

⚠ Caution

SMC products are not intended for use as instruments for legal metrology.
Measurement instruments that SMC manufactures or sells have not been qualified by type approval tests relevant to the metrology (measurement) laws of each country. Therefore, SMC products cannot be used for business or certification ordained by the metrology (measurement) laws of each country.

⚠ Safety Instructions Be sure to read "Handling Precautions for SMC Products" (M-E03-3) before using.

SMC Corporation (Europe)

Austria	☎+43 (0)2262622800	www.smc.at	office@smc.at
Belgium	☎+32 (0)33551464	www.smcpneumatics.be	info@smcpneumatics.be
Bulgaria	☎+359 (0)2807670	www.smc.bg	office@smc.bg
Croatia	☎+385 (0)13707288	www.smc.hr	office@smc.hr
Czech Republic	☎+420 541424611	www.smc.cz	office@smc.cz
Denmark	☎+45 70252900	www.smcdk.com	smc@smcdk.com
Estonia	☎+372 6510370	www.smcpneumatics.ee	smc@smcpneumatics.ee
Finland	☎+358 207513513	www.smc.fi	smcfi@smc.fi
France	☎+33 (0)164761000	www.smc-france.fr	info@smc-france.fr
Germany	☎+49 (0)61034020	www.smc.de	info@smc.de
Greece	☎+30 210 2717265	www.smchellas.gr	sales@smchellas.gr
Hungary	☎+36 23513000	www.smc.hu	office@smc.hu
Ireland	☎+353 (0)14039000	www.smcpneumatics.ie	sales@smcpneumatics.ie
Italy	☎+39 0292711	www.smcitalia.it	mailbox@smcitalia.it
Latvia	☎+371 67817700	www.smclv.lv	info@smclv.lv
Lithuania	☎+370 5 2308118	www.smclt.lt	info@smclt.lt
Netherlands	☎+31 (0)205318888	www.smcpneumatics.nl	info@smcpneumatics.nl
Norway	☎+47 67129020	www.smc-norge.no	post@smc-norge.no
Poland	☎+48 222119600	www.smc.pl	office@smc.pl
Portugal	☎+351 226166570	www.smc.eu	postpt@smc.smces.es
Romania	☎+40 213205111	www.smcromania.ro	smcromania@smcromania.ro
Russia	☎+7 8127185445	www.smc-pneumatik.ru	info@smc-pneumatik.ru
Slovakia	☎+421 (0)413213212	www.smc.sk	office@smc.sk
Slovenia	☎+386 (0)73885412	www.smc.si	office@smc.si
Spain	☎+34 902184100	www.smc.eu	post@smc.smces.es
Sweden	☎+46 (0)86031200	www.smc.nu	post@smc.nu
Switzerland	☎+41 (0)523963131	www.smc.ch	info@smc.ch
Turkey	☎+90 212 489 0 440	www.smcpnomatik.com.tr	info@smcpnomatik.com.tr
UK	☎+44 (0)845 121 5122	www.smcpneumatics.co.uk	sales@smcpneumatics.co.uk

SMC CORPORATION Akihabara UDX 15F, 4-14-1, Sotokanda, Chiyoda-ku, Tokyo 101-0021, JAPAN Phone: 03-5207-8249 FAX: 03-5298-5362

1st printing VS printing VS 00 Printed in Spain

Specifications are subject to change without prior notice and any obligation on the part of the manufacturer.