chanhvinh.com

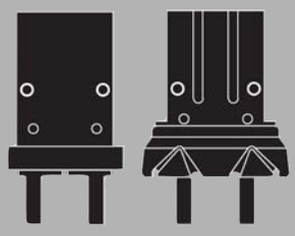

Parallel Type Air Gripper

Series MHZ

ø6, ø10, ø16, ø20, ø25, ø32, ø40

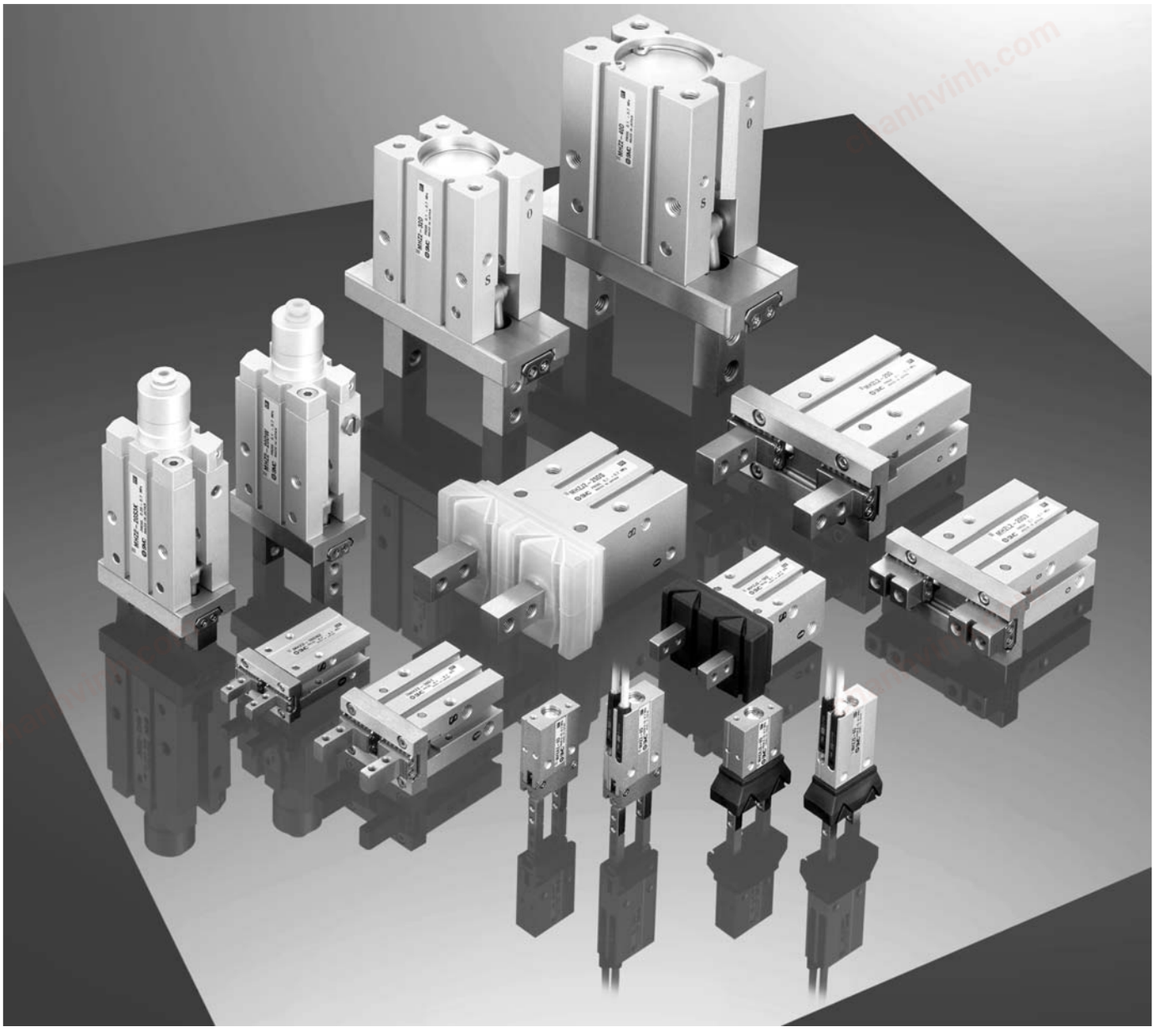

Series upgraded with the addition of new models and expanded size variations

- Long stroke/MHZL2 and compact series/MHZA□2-6 introduced
- ø6, ø32 and ø40 added to standard MHZ2
- ø6 added to MHZJ2 with dust cover

chanhvinh.com

Integral linear guide used for high

• **Linear guide slippage prevention**
Guide slippage is prevented by two positioning dowel pins.

• **Repeatability: ±0.01mm**

Low profile

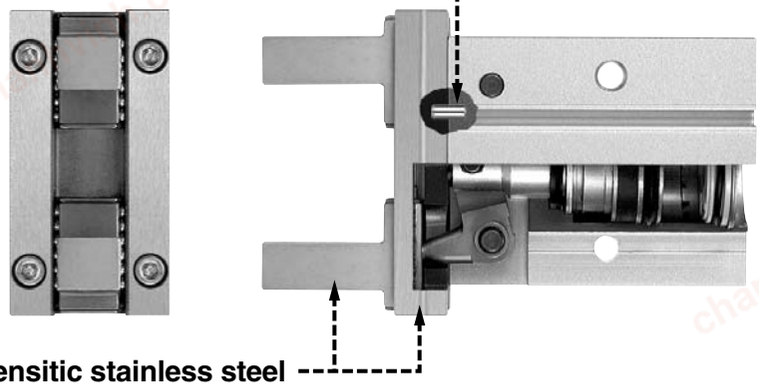

• **Martensitic stainless steel**

High degree of mounting flexibility

Can be mounted five ways from three directions.

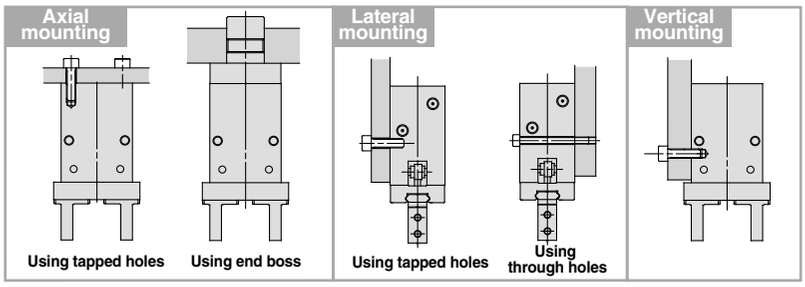

Finger positions can be selected

(Standard type/MHZ2)

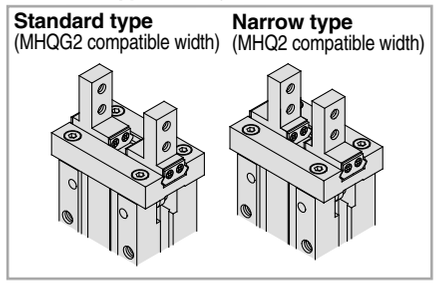

Series Variations

Series	Bore size (mm)	Action	Body options: Basic type: Side ported	Body options: End boss type: Side ported	With One-touch fitting for coaxial tube	With One-touch fitting	With M3 port	With M5 port	With hose nipple	Finger options: Basic type (tapped in open/close direction)	Side tapped	Through holes in open/close direction	Flat type fingers
Compact series													
Standard MHZA2-6	6	Double acting; Single acting (normally open); Single acting (normally closed)											
With dust cover MHZAJ2-6	6	Double acting; Single acting (normally open); Single acting (normally closed)											
Standard MHZ2	6	Double acting; Single acting (normally open); Single acting (normally closed)											
	10, 16 20, 25	Double acting; Single acting (normally open); Single acting (normally closed)											
	32, 40	Double acting; Single acting (normally open); Single acting (normally closed)											
Long stroke MHZL2	10, 16 20, 25	Double acting; Single acting (normally open); Single acting (normally closed)											
With dust cover MHZJ2	6	Double acting; Single acting (normally open); Single acting (normally closed)											
	10, 16 20, 25	Double acting; Single acting (normally open); Single acting (normally closed)											

chanhvinh.com

rigidity and high precision

- **Body thickness tolerance: ±0.05mm**
- **No guide protrusion in direction of body thickness**
- **Improved remounting accuracy**
  Positioning dowel pin holes provided
- **Top mounting centering location**
  Mounting is more secure with a depth 0.5 to 2mm greater than conventional types

Integral guide rail construction

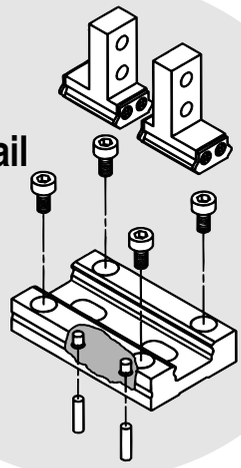



Accommodates diverse work piece diameters with a single unit

- Nearly double the standard stroke
- Long strokes are also compact and light weight

Long strokes
MHZL2

Series	Opening/Closing stroke mm (Open — Closed)	Weight g	Body thickness mm
MHZL2-10	8 (4)	60	16.4
MHZL2-16	12 (6)	135	23.6
MHZL2-20	18 (10)	270	27.6
MHZL2-25	22 (14)	470	33.6

Values inside ( ) are for standard series MHZ2.



A wide variety of types and broad size variations

Compact series (without auto switch)

ø6





ø32, ø40

Standard type

ø6





ø10 to ø25

With dust cover
ø10 to ø25

ø6





Long stroke
ø10 to ø25





chanhvinh.com

Parallel Type
Air Gripper

Compact Series (Without Auto Switch)

Series MHZA2-6/MHZAJ2-6

How to Order

MHZA **2** — **6** **D** □ □

MHZAJ **2** — **6** **D** □ □

With dust cover

Number of fingers

2	2 fingers

Bore size

6	6mm

Action

D	Double acting
S	Single acting (normally open)
C	Single acting (normally closed)

Finger option

[Standard type]

Nil: Basic

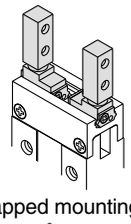

1: Side tapped mounting

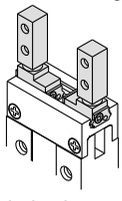

2: Through holes in opening/closing direction

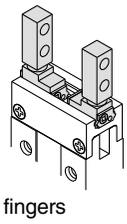

3: Flat type fingers

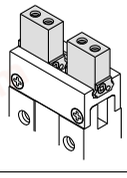

Dust cover type

Nil	Chloroprene rubber (CR)
F	Fluoro rubber (FKM)
S	Silicon rubber (Si)

Body option

Nil: Basic

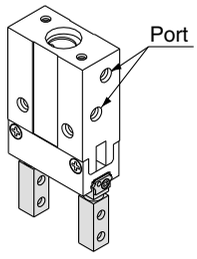

E: End boss type
Side ported
(double acting/single acting)

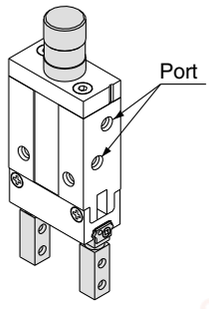

K: End boss type
Axial port with
ø4 One-touch fitting
(single acting)

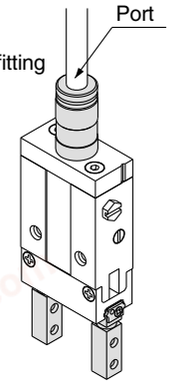

H: End boss type
Axial port with
ø4 hose nipple
(single acting)

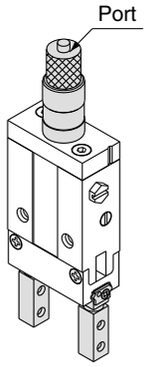

M: End boss type
Axial M3 port
(single acting)

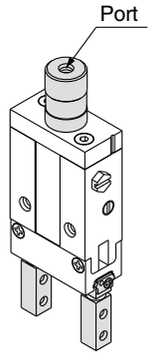

chanhvinh.com



Specifications

Fluid			Air
Operating pressure	**Double acting**		0.15 to 0.7MPa
	Single acting	**Normally open**	0.3 to 0.7MPa
		Normally closed	
Ambient and fluid temperature			–10 to 60 °C
Repeatability			±0.01mm
Maximum operating frequency			180c.p.m.
Lubrication			Non-lube
Action			Double acting, Single acting

Models

Action		Model	Bore size (mm)	Gripping force Note 1) Gripping force per finger Effective value N		Opening/ Closing stroke (both sides) mm	Weight g
				External gripping force	Internal gripping force		
Double acting		**MHZA2-6D**	6	3.3	6.1	4	26
		MHZAJ2-6D	6			4	27
Single acting	Normally open	**MHZA2-6S**	6	1.9	—	4	26
		MHZAJ2-6S	6			4	27
	Normally closed	**MHZA2-6C**	6	—	3.7	4	26
		MHZAJ2-6C	6			4	27

Note 1) Values based on pressure of 0.5MPa, gripping point L = 20mm, at center of stroke.

Symbols:

Double acting type

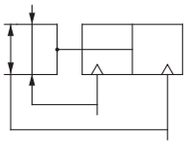

Single acting type, normally open

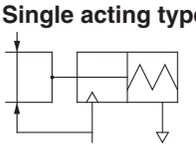

Single acting type, normally closed

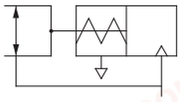

Options

• Body options/End boss type

Symbol	Piping port position	Type of piping port	Applicable model	
		MHZA2-6/MHZAJ2-6	Double acting	Single acting
Nil	Standard	M3	●	●
E	Side ported	M3	●	●
K	Axial port	With ø4 One-touch fitting	—	●
H		With ø4 hose nipple	—	●
M		M3	—	●

chanhvinh.com

Series MHZA2-6/MHZAJ2-6

Construction/Standard Type MHZA2-6

Double acting/with fingers open

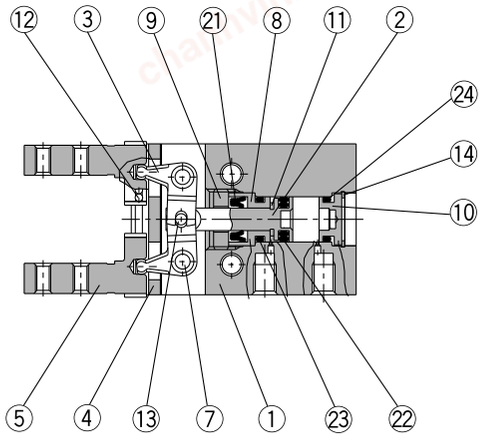

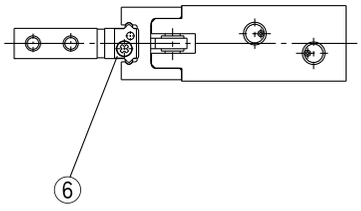

Single acting/normally open

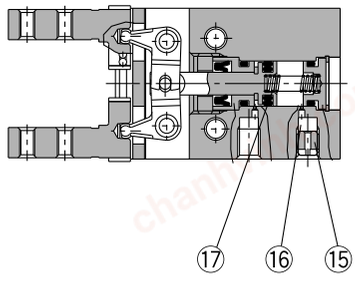

Single acting/normally closed

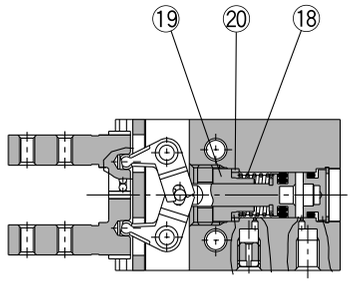

Double acting/with fingers closed

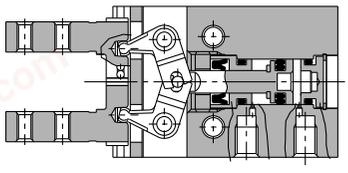

Parts list

No.	Description	Material	Note
1	**Body**	Aluminum alloy	Hard anodized
2	**Piston**	Stainless steel	
3	**Lever**	Stainless steel	Heat treated
4	**Guide**	Stainless steel	Heat treated
5	**Finger**	Stainless steel	Heat treated
6	**Roller stopper**	Stainless steel	
7	**Lever shaft**	Stainless steel	Nitrided
8	**Holder**	Brass	Electroless nickel plated
9	**Holder lock**	Stainless steel	
10	**Cap**	Aluminum alloy	Clear anodized
11	**Bumper**	Urethane rubber	
12	**Steel balls**	High carbon chromium bearing steel	
13	**Needle roller**	High carbon chromium bearing steel	

Parts list

No.	Description	Material	Note
14	**C type snap ring**	Carbon steel	Nickel plated
15	**Exhaust plug**	Brass	Electroless nickel plated
16	**Exhaust filter**	Polyvinyl formal	
17	**N.O. spring**	Stainless steel spring wire	
18	**N.C. spring**	Stainless steel spring wire	
19	**N.C. holder**	Brass	Electroless nickel plated
20	**N.C. spacer**	Stainless steel	
21	**Rod seal**	NBR	
22	**Piston seal**	NBR	
23	**Gasket**	NBR	
24	**Gasket**	NBR	

Replacement parts: Seal kits

Seal kit no.	Description
MHZA6-PS	Kit includes items 21, 22, 23 and 24 from the table above.

∗ Seal kits consist of items 21, 22, 23 and 24 in one kit, and can be ordered using the seal kit number.

Note) Contact SMC when replacing seals.

chanhvinh.com

Construction/With Dust Cover MHZAJ2-6

Double acting/with fingers open

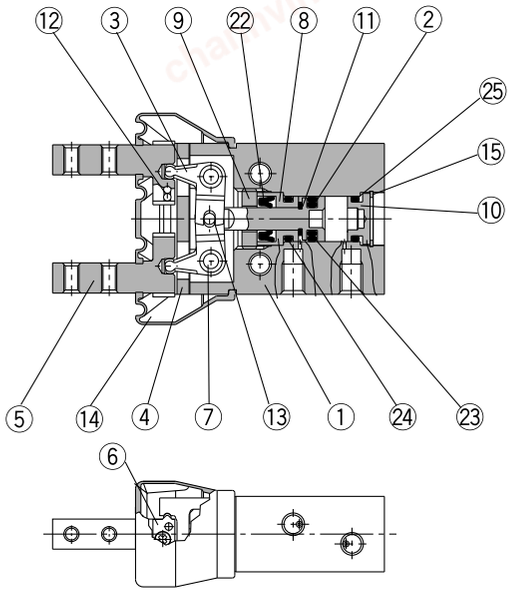

Single acting/normally open

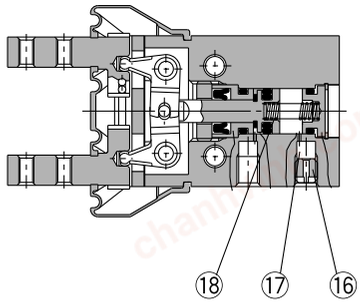

Single acting/normally closed

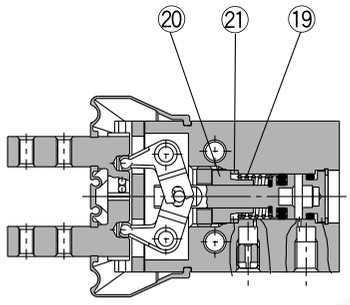

Double acting/with fingers closed

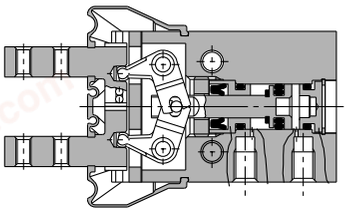

Parts list

No.	Description	Material	Note
1	**Body**	Aluminum alloy	Hard anodized
2	**Piston**	Stainless steel	
3	**Lever**	Stainless steel	Heat treated
4	**Guide**	Stainless steel	Heat treated
5	**Finger**	Stainless steel	Heat treated
6	**Roller stopper**	Stainless steel	
7	**Lever shaft**	Stainless steel	Nitrided
8	**Holder**	Brass	Electroless nickel plated
9	**Holder lock**	Stainless steel	
10	**Cap**	Aluminum alloy	Clear anodized
11	**Bumper**	Urethane rubber	
12	**Steel balls**	High carbon chromium bearing steel	
13	**Needle roller**	High carbon chromium bearing steel	

Replacement parts: Seal kits

Seal kit no.	Description
MHZAJ6-PS	Kit includes items 22, 23, 24 and 25 from the table above.

∗ Seal kits consist of items 22, 23, 24 and 25 in one kit, and can be ordered using the seal kit number.

Note) Contact SMC when replacing seals.

Parts list

No.	Description	Material	Note
14	**Dust cover**	CR	Chloroprene rubber
		FKM	Fluoro rubber
		Si	Silicon rubber
15	**C type snap ring**	Carbon steel	Nickel plated
16	**Exhaust plug**	Brass	Electroless nickel plated
17	**Exhaust filter**	Polyvinyl formal	
18	**N.O. spring**	Stainless steel spring wire	
19	**N.C. spring**	Stainless steel spring wire	
20	**N.C. holder**	Brass	Electroless nickel plated
21	**N.C. spacer**	Stainless steel	
22	**Rod seal**	NBR	
23	**Piston seal**	NBR	
24	**Gasket**	NBR	
25	**Gasket**	NBR	

Replacement parts: Dust covers

Material	Part number
CR	MHZAJ2-J6
FKM	MHZAJ2-J6F
Si	MHZAJ2-J6S

chanhvinh.com

Series MHZA2-6/MHZAJ2-6

Dimensions/Standard Type

MHZA2-6□
Double acting/Single acting
Basic Type

Scale: 100%

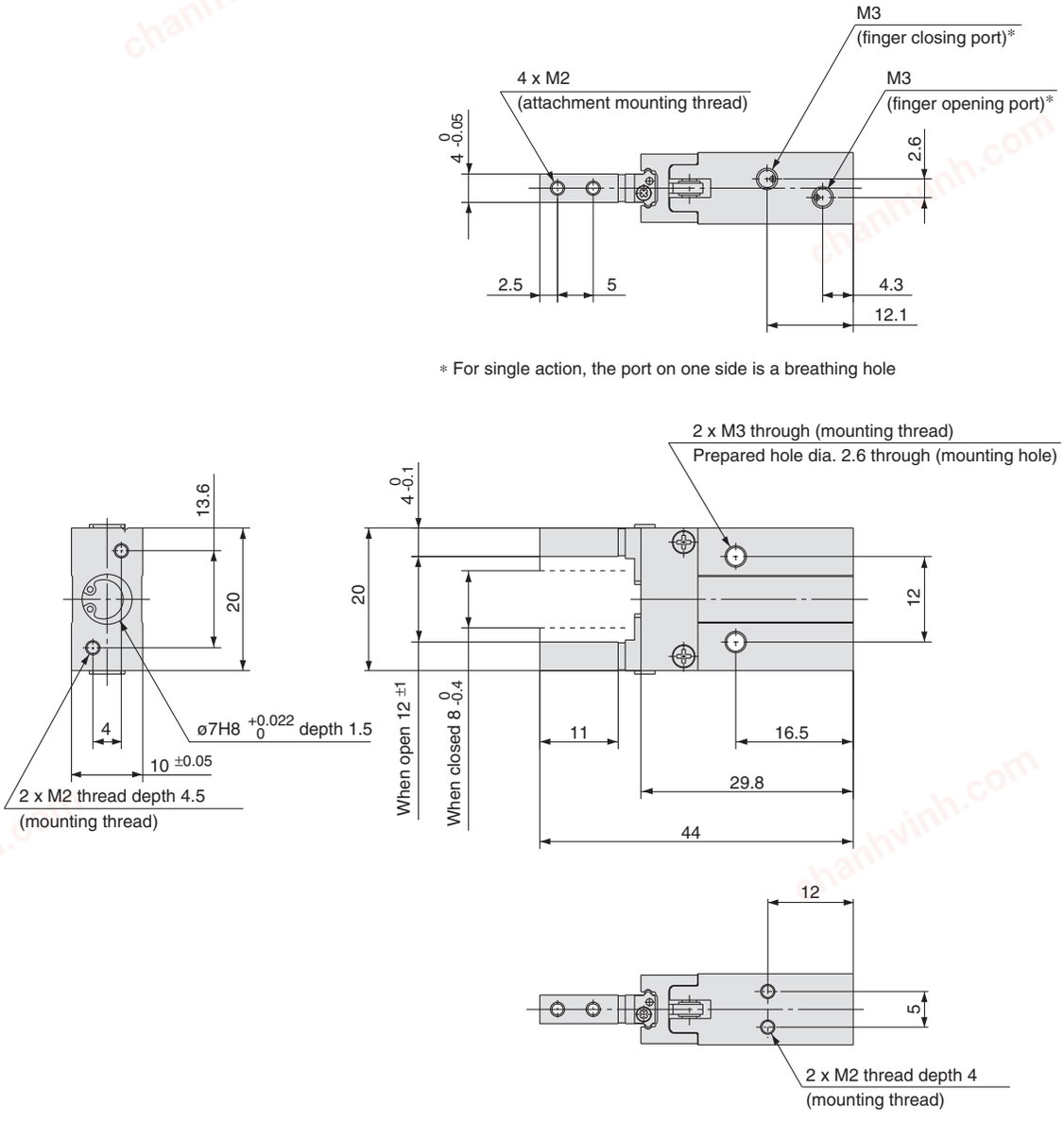

* For single action, the port on one side is a breathing hole

chanhvinh.com

Dimensions/With dust cover

MHZAJ2-6□
Double acting/Single acting
Basic Type

Scale: 100%

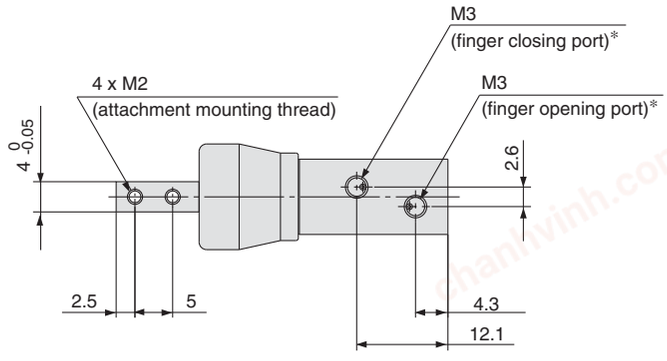

* For single action, the port on one side is a breathing hole.

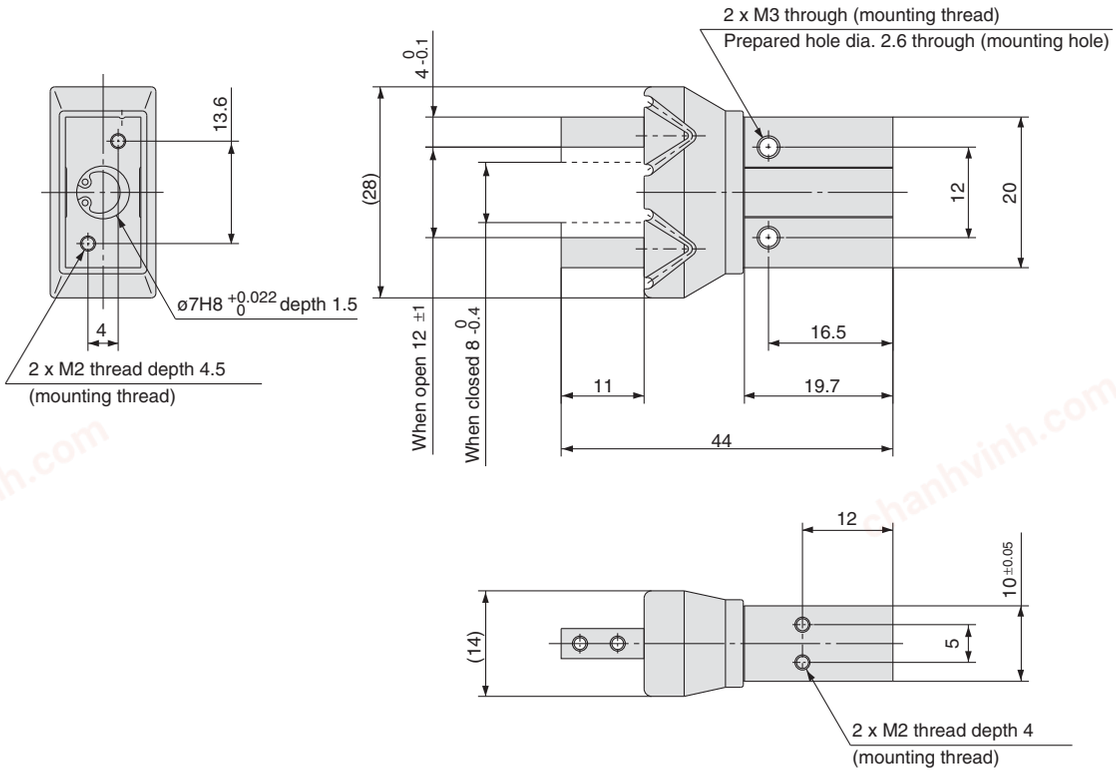

chanhvinh.com

Series MHZA2-6

Finger Options

Side Tapped Mounting [1]

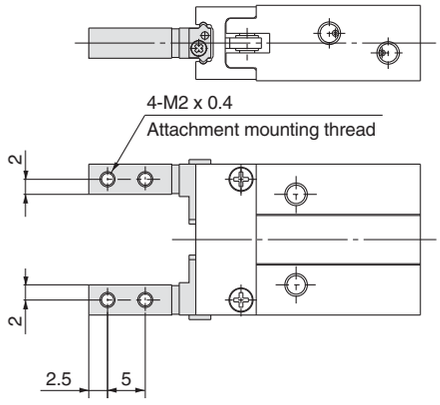

∗ Specifications and dimensions other than the above are the same as the basic type.

Through Holes in Opening/Closing Direction [2]

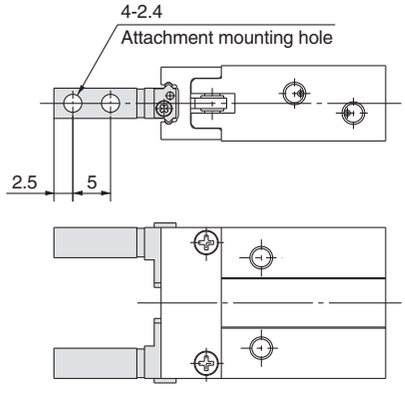

∗ Specifications and dimensions other than the above are the same as the basic type.

Flat Type Fingers [3]

Note) To mount attachments, use M2 hexagon socket head cap screws with ø3.3 top diameter, or JISB1101 type M2 round head screws.

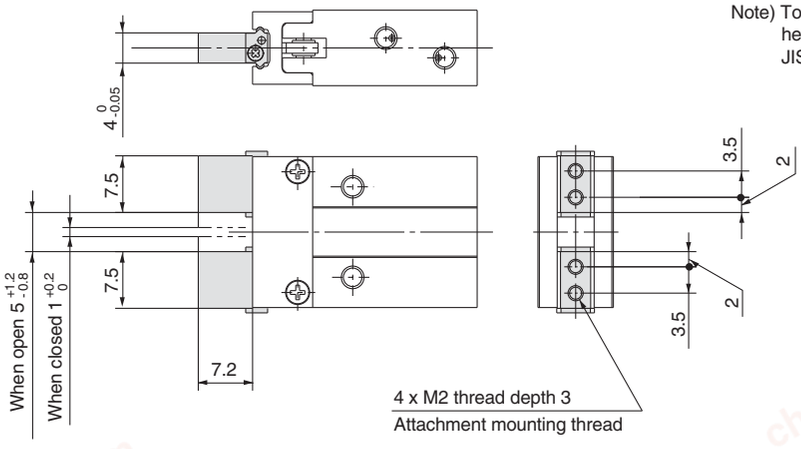

Weight: 25g

∗ Specifications and dimensions other than the above are the same as the basic type.

chanhvinh.com

Series MHZA2-6/MHZAJ2-6

Body Options: End Boss Type

Applicable Models

Symbol	Piping port position	Type of piping port		Applicable model	
		MHZA2	**MHZAJ2**	Double acting	Single acting
E	Side ported	M3		●	●
H	Axial port	With ø4 hose nipple		—	●
K		With ø4 One-touch fitting		—	●
M		M3		—	●

Side Ported [E]

MHZA2-6□□E

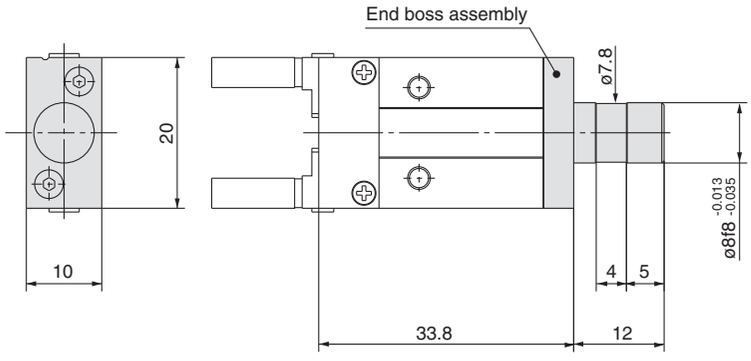

∗ Specifications and dimensions other than the above are the same as the basic type.

MHZAJ2-6□□E

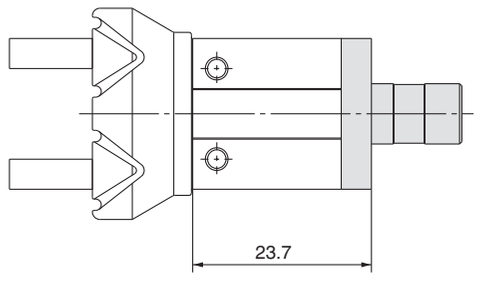

∗ Specifications and dimensions other than the above are the same as the basic type or the end boss dimensions of the MHZA type.

Axial Port (with Hose Nipple) [H]

MHZA2-6$^{S}_{C}$□H

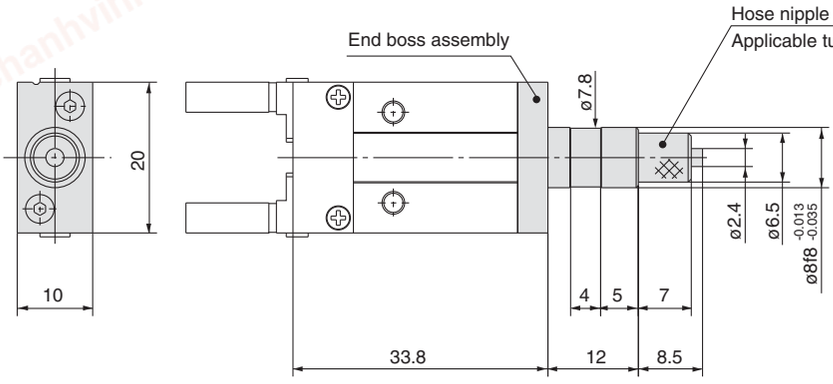

∗ Specifications and dimensions other than the above are the same as the basic type.

MHZAJ2-6$^{S}_{C}$□H

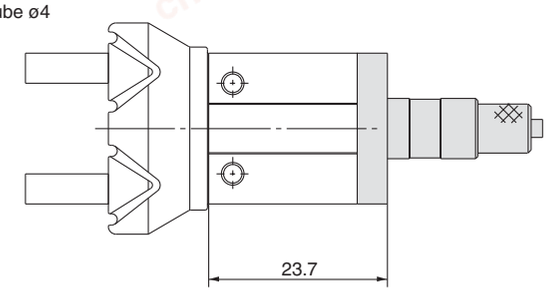

∗ Specifications and dimensions other than the above are the same as the basic type or the end boss dimensions of the MHZA type.

Applicable Tubing

Description/Model / Specification	Nylon tubing	Soft nylon tubing	Polyurethane tubing	Polyurethane coiled tubing
	T0425	TS0425	TU0425	TCU0425B-1
Outside diameter mm	4	4	4	4
Max. operating pressure MPa	1.0	0.8	0.5	0.5
Minimum bending radius mm	13	12	10	—
Operating temperature °C	–20 to 60	–20 to 60	–20 to 60	–20 to 60
Material	Nylon 12	Nylon 12	Polyurethane	Polyurethane

Refer to catalogue CAT.501-B "Air Fittings and Tubing" regarding One-touch fittings and tubing.

chanhvinh.com

Series MHZA2-6/MHZAJ2-6

Axial Port (with One-touch Fitting) [K]

MHZA2-6 S/C□K

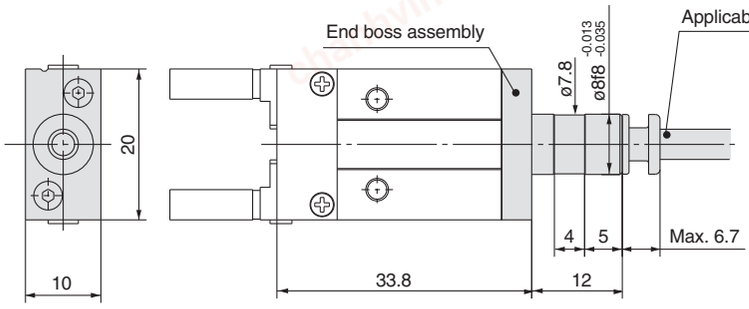

∗ Specifications and dimensions other than the above are the same as the basic type.

MHZAJ2-6 S/C□K

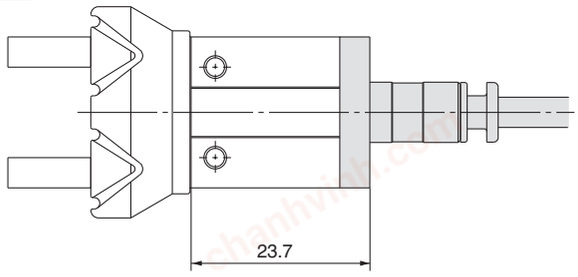

∗ Specifications and dimensions other than the above are the same as the basic type or the end boss dimensions of the MHZA type.

Applicable tubing

Description/Model / Specification	Nylon tubing T0425	Soft nylon tubing TS0425	Polyurethane tubing TU0425	Polyurethane coiled tubing TCU0425B-1
Outside diameter mm	4	4	4	4
Max. operating pressure MPa	1.0	0.8	0.5	0.5
Minimum bending radius mm	13	12	10	—
Operating temperature °C	–20 to 60	–20 to 60	–20 to 60	–20 to 60
Material	Nylon 12	Nylon 12	Polyurethane	Polyurethane

Refer to catalogue CAT. 501-B "Air Fittings and Tubing" regarding One-touch fittings and tubing.

Axial Port (M3 Port) [M]

MHZA2-6 S/C□M

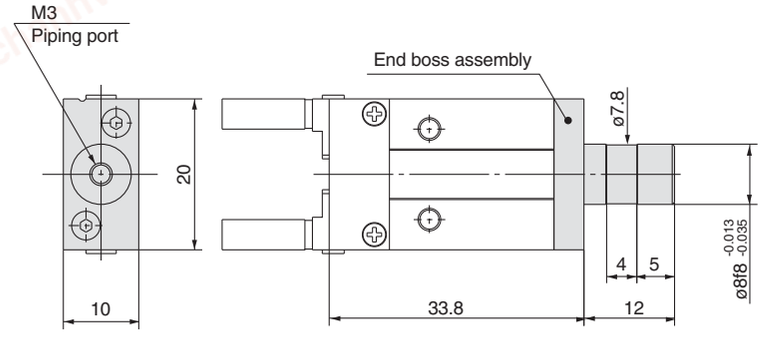

∗ Specifications and dimensions other than the above are the same as the basic type.

MHZAJ2-6 S/C□M

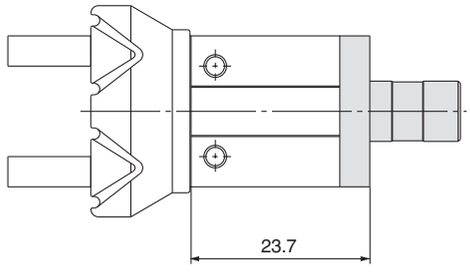

∗ Specifications and dimensions other than the above are the same as the basic type or the end boss dimensions of the MHZA type.

Weights

Unit: g

Model	End boss type (symbol)			
	E	H	K	M
MHZA2-6□□	28	28	28	28
MHZAJ2-6□□	29	29	29	29

chanhvinh.com

Parallel Type
Air Gripper

Standard Type
Series MHZ2

How to Order

ø6 **MHZ2** – **6** **D** **[ ]** – **M9PV** **[ ]**

Number of fingers

2	2 fingers

Bore size

6	6mm

Action

D	Double acting
S	Single acting (normally open)
C	Single acting (normally closed)

Finger option

Auto switch type

Nil	Without auto switch (built-in magnet)

∗ Select an applicable auto switch model from the table below.

Number of auto switches

Nil	2 pcs.
S	1 pc.

[Standard type]

Nil: Basic type

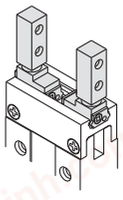

1: Side tapped mounting

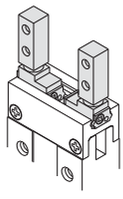

2: Through holes in opening/ closing direction

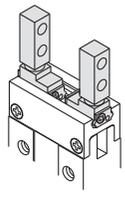

3: Flat type fingers

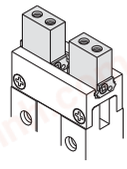

Applicable Auto Switches

Type	Special function	Electrical entry	Indicator light	Wiring (Output)	Load voltage			Auto switch model		Lead wire length (m) ∗				Pre-wired connector	Applicable load	
								Electrical entry direction		0.5 (Nil)	1 (M)	3 (L)	5 (Z)			
					DC		AC	Perpendicular	In-line							
Solid state auto switch	—	Grommet	Yes	3-wire (NPN)	24 V	5 V, 12 V	—	**M9NV**	**M9N**	●	●	●	○	○	IC circuit	Relay, PLC
								F8N	—	●	—	●	○	—		
				3-wire (PNP)				**M9PV**	**M9P**	●	●	●	○	○		
								F8P	—	●	—	●	○	—		
				2-wire		12 V		**M9BV**	**M9B**	●	●	●	○	○	—	
								F8B	—	●	—	●	○	—		
	Diagnosis (2-colour indicator)			3-wire (NPN)		5 V, 12 V		**M9NWV**	**M9NW**	●	●	●	○	○	IC circuit	
				3-wire (PNP)				**M9PWV**	**M9PW**	●	●	●	○	○		
				2-wire		12 V		**M9BWV**	**M9BW**	●	●	●	○	○	—	
	Water resistant (2-colour indicator)			3-wire (NPN)		5 V, 12 V		**M9NAV**∗∗	**M9NA**∗∗	○	○	●	○	○	IC circuit	
				3-wire (PNP)				**M9PAV**∗∗	**M9PA**∗∗	○	○	●	○	○		
				2-wire		12 V		**M9BAV**∗∗	**M9BA**∗∗	○	○	●	○	○	—	

∗∗ Water resistant type auto switches can be mounted on the above models, but in such case SMC cannot guarantee water resistance.

∗ Lead wire length symbols: 0.5 m····· Nil (Example) M9NW
1 m····· M (Example) M9NWM
3 m····· L (Example) M9NWL
5 m····· Z (Example) M9NWZ

∗ Solid state auto switches marked with ○ are produced upon receipt of order.

Note 1) When using a D-F8□ switch, mount it at a distance of 10 mm or more from magnetic substances such as iron, etc.
Note 2) When using the 2-colour indicator type, please make the setting so that the indicator is lit in red to ensure the detection at the proper position of the air gripper.

chanhvinh.com

Series MHZ2

How to Order

ø10 to ø25 **MHZ2** – **16** **D** [ ] [ ] – **M9PV** [ ]

Number of fingers

2	2 fingers

Bore size

10	10mm
16	16mm
20	20mm
25	25mm

Action

D	Double acting
S	Single acting (normally open)
C	Single acting (normally closed)

Finger position/Option

Standard type
[MHQG2 compatible type]

Nil: Basic type

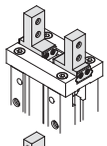

1: Side tapped mounting

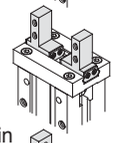

2: Through holes in opening/closing direction

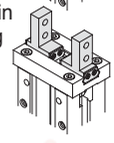

Narrow type
[MHQ2 compatible type]

N: Basic type

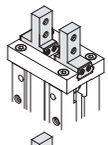

N1: Side tapped mounting

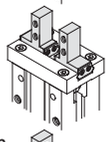

N2: Through holes in opening/closing direction

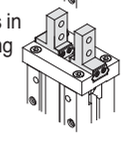

3: Flat type fingers

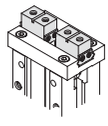

The flat type fingers do not have standard and narrow options. When MHQG2/MHQ2 compatible types are required, see the -X51 order made specifications on page 5-60

Number of auto switches

Nil	2 pcs.
S	1 pc.

Auto switch type

Nil	Without auto switch (built-in magnet)

∗ Select an auto switch model from the table below.

Body option

Nil: Basic type

E: End boss type
Side ported (double acting/single acting)

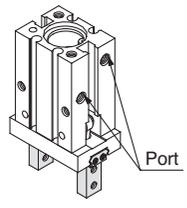

W: End boss type
Axial port with ø4 One-touch fitting for coaxial tubing (double acting)

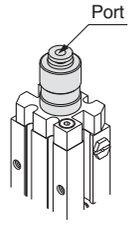

K: End boss type
Axial port with ø4 One-touch fitting (single acting)

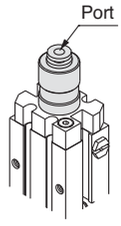

M: End boss type
Axial M5 port (single acting)

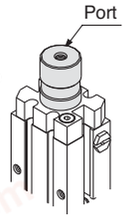

Applicable Auto Switches

Type	Special function	Electrical entry	Indicator light	Wiring (Output)	Load voltage			Auto switch model		Lead wire length (m) ∗				Applicable model				Pre-wired connector	Applicable load	
								Electrical entry direction		0.5 (Nil)	1 (M)	3 (L)	5 (Z)	ø10	ø16	ø20	ø25			
					DC		AC	Perpendicular	In-line											
Solid state auto switch	–	Grommet	Yes	3-wire (NPN)	24 V	5 V, 12 V	–	**M9NV**	**M9N**	●	●	●	○	●	●	●	●	○	IC circuit	Relay, PLC
								F8N	–	●	–	●	○	–	●	●	●	–		
				3-wire (PNP)				**M9PV**	**M9P**	●	●	●	○	●	●	●	●	○		
								F8P	–	●	–	●	○	–	●	●	●	–		
				2-wire		12 V		**M9BV**	**M9B**	●	●	●	○	●	●	●	●	○	–	
								F8B	–	●	–	●	○	–	●	●	●	–		
	Diagnosis (2-colour indicator)			3-wire (NPN)		5 V, 12 V		**M9NWV**	**M9NW**	●	●	●	○	●	●	●	●	○	IC circuit	
				3-wire (PNP)				**M9PWV**	**M9PW**	●	●	●	○	●	●	●	●	○		
				2-wire		12 V		**M9BWV**	**M9BW**	●	●	●	○	●	●	●	●	○	–	
	Water resistant (2-colour indicator)			3-wire (NPN)		5 V, 12 V		**M9NAV**∗∗	**M9NA**∗∗	○	○	●	○	●	●	●	●	○	IC circuit	
				3-wire (PNP)				**M9PAV**∗∗	**M9PA**∗∗	○	○	●	○	●	●	●	●	○		
				2-wire		12 V		**M9BAV**∗∗	**M9BA**∗∗	○	○	●	○	●	●	●	●	○	–	

∗∗ Water resistant type auto switches can be mounted on the above models, but in such case SMC cannot guarantee water resistance.
∗ Lead wire length symbols: 0.5 m····· Nil (Example) M9NW
1 m····· M (Example) M9NWM
3 m····· L (Example) M9NWL
5 m····· Z (Example) M9NWZ

∗ Solid state auto switches marked with ○ are produced upon receipt of order.

Note 1) When using the 2-colour indicator type, please make the setting so that the indicator is lit in red to ensure the detection at the proper position of the air gripper.
Note 2) Through-hole mounting is not possible when using the auto switch at the square groove on the side.
Note 3) When the product is ordered with auto switch, only MHZ2-10 is shipped with the auto switch mounting brackets. When the auto switch is used at the square groove on the side with MHZ2-16 to 25, mounting brackets (BMG2-012) are required. Pease order them separately.

chanhvinh.com

How to Order

ø32 to ø40 **MHZ2** – **32** **D** **[ ]** – **M9PV** **[ ]**

Number of fingers

2	2 fingers

Bore size

32	32mm
40	40mm

Action

D	Double acting
S	Single acting (normally open)
C	Single acting (normally closed)

Finger option

Number of auto switches

Nil	2 pcs.
S	1 pc.

Auto switch type

Nil	Without auto switch (built-in magnet)

∗ Select an auto switch model from the table below.

Standard type

Nil: Basic type

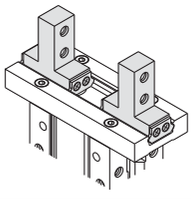

1: Side tapped mounting

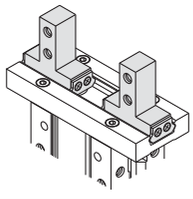

2: Through holes in opening/closing direction

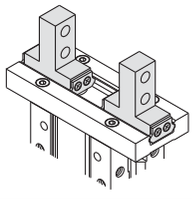

3: Flat type fingers

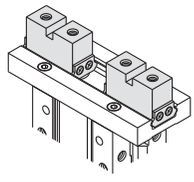

Applicable Auto Switches

Type	Special function	Electrical entry	Indicator light	Wiring (Output)	Load voltage			Auto switch model		Lead wire length (m) ∗				Pre-wired connector	Applicable load	
								Electrical entry direction		0.5 (Nil)	1 (M)	3 (L)	5 (Z)			
					DC		AC	Perpendicular	In-line							
Solid state auto switch	—	Grommet	Yes	3-wire (NPN)	24 V	5 V, 12 V	—	**M9NV**	**M9N**	●	●	●	○	○	IC circuit	Relay, PLC
								F8N	—	●	—	●	○	—		
				3-wire (PNP)				**M9PV**	**M9P**	●	●	●	○	○		
								F8P	—	●	—	●	○	—		
				2-wire		12 V		**M9BV**	**M9B**	●	●	●	○	○	—	
								F8B	—	●	—	●	○	—		
	Diagnosis (2-colour indicator)			3-wire (NPN)		5 V, 12 V		**M9NWV**	**M9NW**	●	●	●	○	○	IC circuit	
				3-wire (PNP)				**M9PWV**	**M9PW**	●	●	●	○	○		
				2-wire		12 V		**M9BWV**	**M9BW**	●	●	●	○	○	—	
	Water resistant (2-colour indicator)			3-wire (NPN)		5 V, 12 V		**M9NAV**∗∗	**M9NA**∗∗	○	○	●	○	○	IC circuit	
				3-wire (PNP)				**M9PAV**∗∗	**M9PA**∗∗	○	○	●	○	○		
				2-wire		12 V		**M9BAV**∗∗	**M9BA**∗∗	○	○	●	○	○	—	

∗∗ Water resistant type auto switches can be mounted on the above models, but in such case SMC cannot guarantee water resistance.

∗ Lead wire length symbols: 0.5 m····· Nil (Example) M9NW
1 m····· M (Example) M9NWM
3 m····· L (Example) M9NWL
5 m····· Z (Example) M9NWZ

∗ Solid state auto switches marked with ○ are produced upon receipt of order.

Note 1) When using the 2-colour indicator type, please make the setting so that the indicator is lit in red to ensure the detection at the proper position of the air gripper.
Note 2) Through-hole mounting is not possible when using the auto switch at the square groove on the side.
Note 3) When the auto switch is used at the square groove on the side with MHZ2-32 and 40, mounting brackets (BMG2-012) are required. Please order them separately.

chanhvinh.com

Series MHZ2

ø6



ø10 to ø25



ø32, ø40

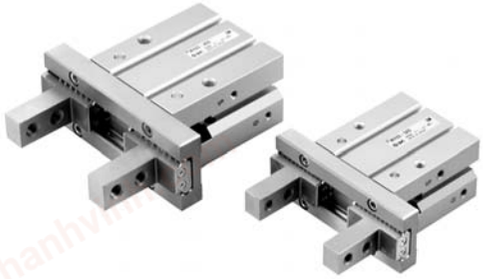

Symbols:

Double acting type

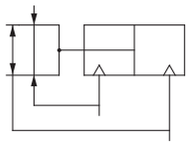

Single acting type, normally open

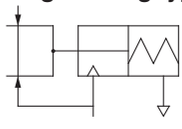

Single acting type, normally closed

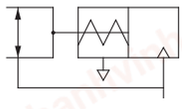

Specifications

Fluid			Air
Operating pressure	**Double acting**		ø6: 0.15 to 0.7MPa ø10: 0.2 to 0.7MPa ø16 to ø40: 0.1 to 0.7MPa
	Single acting	**Normally open**	ø6: 0.3 to 0.7MPa ø10: 0.35 to 0.7MPa ø16 to ø40: 0.25 to 0.7MPa
		Normally closed	
Ambient and fluid temperature			–10 to 60°C
Repeatability			ø6 to ø25: ±0.01mm ø32, ø40: ±0.02mm
Maximum operating frequency			ø6 to ø25: 180c.p.m. ø32, ø40: 60c.p.m.
Lubrication			Non-lube
Action			Double acting, Single acting
Auto switch (option) Note)			Solid state switch (3 wire, 2 wire)

Models

Action		Model	Bore size (mm)	Gripping force Note 1)		Opening/ Closing stroke (both sides) mm	Note 2) Weight g
				Gripping force per finger Effective value N			
				External gripping force	Internal gripping force		
Double acting		**MHZ2-6D**	6	3.3	6.1	4	27
		MHZ2-10D(N)	10	11	17	4	55
		MHZ2-16D(N)	16	34	45	6	115
		MHZ2-20D(N)	20	42	66	10	235
		MHZ2-25D(N)	25	65	104	14	430
		MHZ2-32D	32	158	193	22	715
		MHZ2-40D	40	254	318	30	1275
Single acting	Normally open	**MHZ2-6S**	6	1.9	—	4	27
		MHZ2-10S(N)	10	7.1		4	55
		MHZ2-16S(N)	16	27		6	115
		MHZ2-20S(N)	20	33		10	240
		MHZ2-25D(N)	25	45		14	435
		MHZ2-32S	32	131		22	760
		MHZ2-40S	40	217		30	1370
	Normally closed	**MHZ2-6C**	6	—	3.7	4	27
		MHZ2-10C(N)	10		13	4	55
		MHZ2-16C(N)	16		38	6	115
		MHZ2-20C(N)	20		57	10	240
		MHZ2-25C(N)	25		83	14	430
		MHZ2-32C	32		161	22	760
		MHZ2-40C	40		267	30	1370

Note 1) Values based on pressure of 0.5MPa, gripping point L = 20mm, at center of stroke.
Note 2) Values excluding weight of auto switch.

Options

• Body options/End boss type

Symbol	Piping port position	Type of piping port							Applicable model	
		MHZ2-6	MHZ2-10	MHZ2-16	MHZ2-20	MHZ2-25	MHZ2-32	MHZ2-40	Double acting	Single acting
Nil	Basic type	M3		M5					●	●
E	Side ported	—	M3	M5			—		●	●
W	Axial port	—	With ø4 One-touch fitting for coaxial tube				—		●	—
K	Axial port	—	With ø4 One-touch fitting				—		—	●
M	Axial port	—	M5				—		—	●

∗ For detailed body option specifications, refer to option specifications on page 5-32

chanhvinh.com

Clean Room Series: Air Gripper

11 – MHZ2 – □ D □ – M9N □

- **Clean room series**: 11-: Vacuum type
- **Bore size**:

10	10mm
16	16mm
20	20mm
25	25mm

- **Action**:

D	Double acting

- **Finger position/option***
  * Refer to the "How to Order" section on page 5-18
- **Auto switch type**:

Nil	Without auto switch (built-in magnet)

  * Select an applicable auto switch model from the table below.
- **Number of auto switches***

Applicable Auto Switches

Type	Special function	Electrical entry	Indicator light	Wiring (Output)	Load voltage DC	Load voltage AC	Auto switch model: Electrical entry direction: Perpendicular	Auto switch model: Electrical entry direction: In-line	Lead wire length (m) *: 0.5 (Nil)	1 (M)	3 (L)	5 (Z)	Pre-wired connector	Applicable load	
Solid state auto switch	—	Grommet	Yes	3-wire (NPN)	24 V	—	M9NV	M9N	●	●	●	○	○	IC circuit	Relay, PLC
					5 V, 12 V		F8N	—	●	—	●	○	—		
				3-wire (PNP)			M9PV	M9P	●	●	●	○	○		
							F8P	—	●	—	●	○	—		
				2-wire	12 V		M9BV	M9B	●	●	●	○	○	—	
							F8B	—	●	—	●	○	—		
	Diagnosis (2-colour indicator)			3-wire (NPN)	5 V, 12 V		M9NWV	M9NW	●	●	●	○	○	IC circuit	
				3-wire (PNP)			M9PWV	M9PW	●	●	●	○	○		
				2-wire	12 V		M9BWV	M9BW	●	●	●	○	○	—	
	Water resistant (2-colour indicator)			3-wire (NPN)	5 V, 12 V		M9NAV**	M9NA**	○	○	●	○	○	IC circuit	
				3-wire (PNP)			M9PAV**	M9PA**	○	○	●	○	○		
				2-wire	12 V		M9BAV**	M9BA**	○	○	●	○	○	—	

** Water resistant type auto switches can be mounted on the above models, but in such case SMC cannot guarantee water resistance.

* Lead wire length symbols: 0.5 m····· Nil (Example) M9NW
1 m····· M (Example) M9NWM
3 m····· L (Example) M9NWL
5 m····· Z (Example) M9NWZ

* Solid state auto switches marked with ○ are produced upon receipt of order.

Note 1) When using the 2-colour indicator type, please make the setting so that the indicator is lit in red to ensure the detection at the proper position of the air gripper.
Note 2) When using a D-F8□ switch, mount it at a distance of 10 mm or more from magnetic substances such as iron, etc.
Note 3) For 11-MHZ2-10D□, the through-hole mounting cannot be made when using the auto switch.
Note 4) Two extension fitting assemblies (P3311176A) are supplied with 11-MHZ2-10D□. Please use them if the fitting interferes with the auto switch.

Specifications

Fluid	Air
Operating pressure	ø10: 0.2 to 0.7MPa ø16 to ø25: 0.1 to 0.7MPa
Ambient and fluid temperature	–10 to 60C
Repeatability	0.01mm
Maximum operating frequency	180c.p.m.
Lubrication	Non-lube
Action	Double acting
Particulate generation grade	Grade 2
Auto switch (option)	Solid state switch (3 wire, 2 wire)

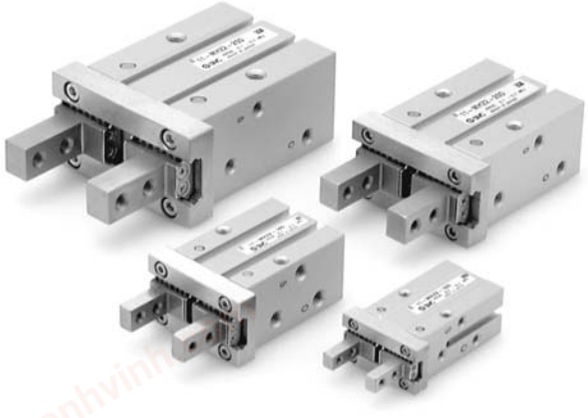

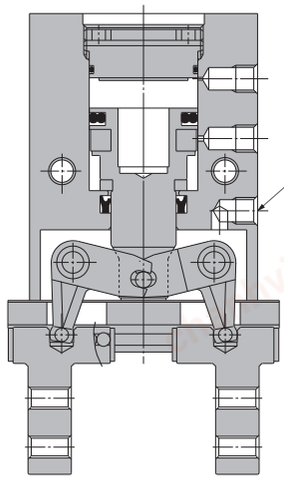

Relief port

The concentrated vacuuming of internally generated particulates prevents them from spreading into the clean room.

For details, refer to SMC Information "Clean Series: Air Gripper Series 11-MHZ2" (98-E461).

chanhvinh.com

Series MHZ2

Construction/MHZ2-6□

Double acting/with fingers open

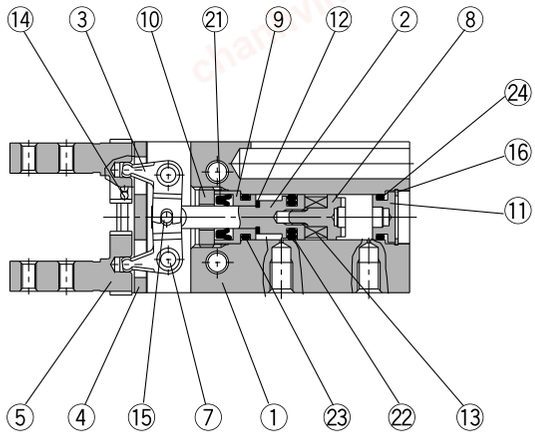

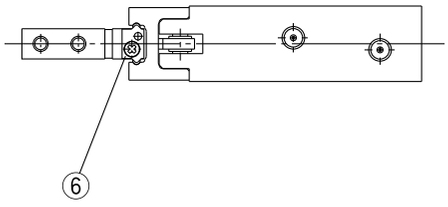

Single acting/normally open

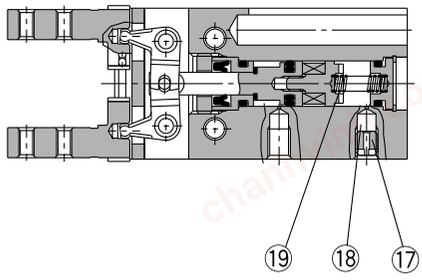

Single acting/normally closed

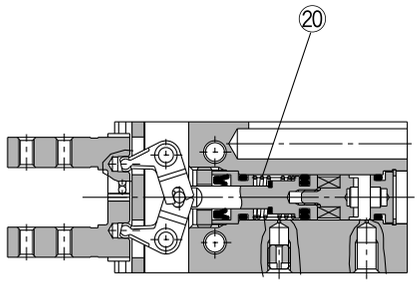

Double acting/with fingers closed

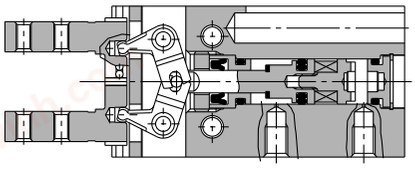

Parts list

No.	Description	Material	Note
1	**Body**	Aluminum alloy	Hard anodized
2	**Piston**	Stainless steel	
3	**Lever**	Stainless steel	Heat treated
4	**Guide**	Stainless steel	Heat treated
5	**Finger**	Stainless steel	Heat treated
6	**Roller stopper**	Stainless steel	
7	**Lever shaft**	Stainless steel	Nitrided
8	**Magnet holder**	Stainless steel	
9	**Holder**	Brass	Electroless nickel plated
10	**Holder lock**	Stainless steel	
11	**Cap**	Aluminum alloy	Clear anodized
12	**Bumper**	Urethane rubber	
13	**Magnet**	Rare earth magnet	Nickel plated

Parts list

No.	Description	Material	Note
14	**Steel balls**	High carbon chromium bearing steel	
15	**Needle roller**	High carbon chromium bearing steel	
16	**C type snap ring**	Carbon steel	Nickel plated
17	**Exhaust plug**	Brass	Electroless nickel plated
18	**Exhaust filter**	Polyvinyl formal	
19	**N.O. spring**	Stainless steel spring wire	
20	**N.C. spring**	Stainless steel spring wire	
21	**Rod seal**	NBR	
22	**Piston seal**	NBR	
23	**Gasket**	NBR	
24	**Gasket**	NBR	

Replacement parts: Seal kits

Seal kit no.	Description
MHZ6-PS	Kit includes items 21, 22, 23 and 24 from the table above.

∗ Seal kits consist of items 21, 22, 23 and 24 in one kit, and can be ordered using the seal kit number.

Note) Contact SMC when replacing seals.

chanhvinh.com

Construction/MHZ2-10□ to 40□

Double acting/with fingers open

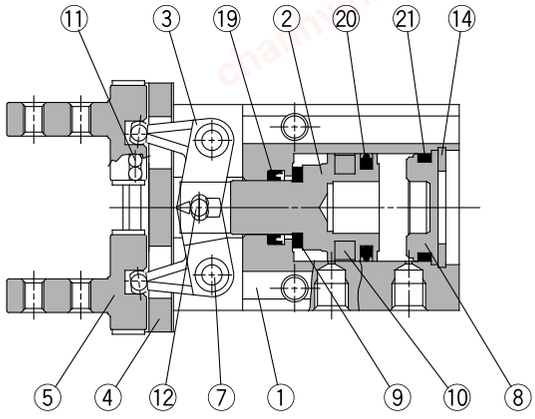

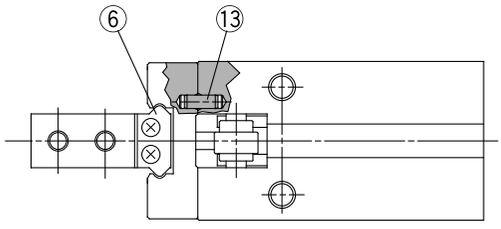

Single acting/normally open

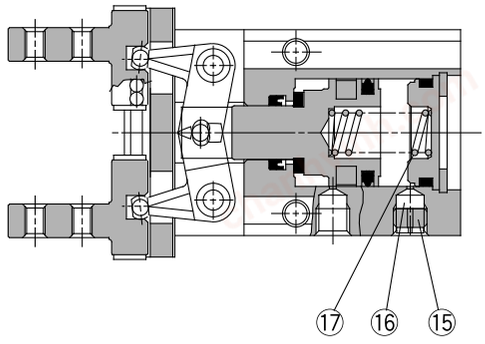

Single acting/normally closed

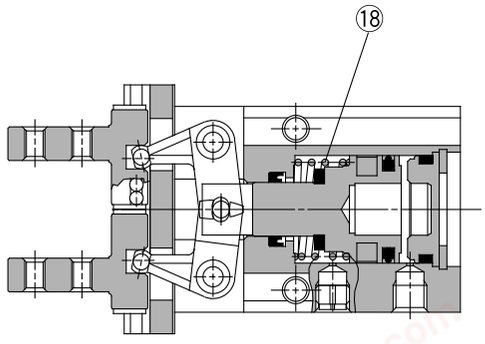

Double acting/with fingers closed

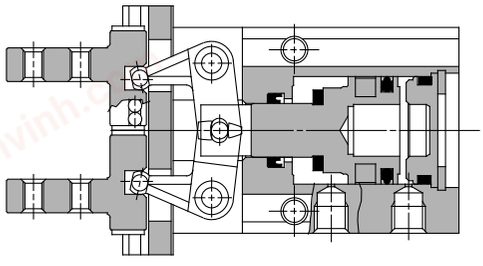

Parts list

No.	Description	Material	Note
1	**Body**	Aluminum alloy	Hard anodized
2	**Piston**	ø10, ø16: Stainless steel ø20 to ø40: Aluminum alloy	ø20 to ø40: Hard anodized
3	**Lever**	Stainless steel	Heat treated
4	**Guide**	Stainless steel	Heat treated
5	**Finger**	Stainless steel	Heat treated
6	**Roller stopper**	Stainless steel	
7	**Lever shaft**	Stainless steel	Nitrided
8	**Cap**	ø10 to ø25: Synthetic resin ø32, ø40: Aluminum alloy	ø32, ø40: Clear anodized
9	**Bumper**	Urethane rubber	
10	**Rubber magnet**	Synthetic rubber	

Parts list

No.	Description	Material	Note
11	**Steel balls**	High carbon chromium bearing steel	
12	**Needle roller**	High carbon chromium bearing steel	
13	**Parallel pin**	Stainless steel	
14	**C type snap ring**	Carbon steel	Nickel plated
15	**Exhaust plug A**	Brass	Electroless nickel plated
16	**Exhaust filter A**	Polyvinyl formal	
17	**N.O. spring**	Stainless steel spring wire	
18	**N.C. spring**	Stainless steel spring wire	
19	**Rod seal**	NBR	
20	**Piston seal**	NBR	
21	**Gasket**	NBR	

Replacement parts: Seal kits

Seal kit no.						Description
MHZ2-10D	**MHZ2-16D**	**MHZ2-20D**	**MHZ2-25D**	**MHZ2-32D**	**MHZ2-40D**	Kits include items 19, 20 and 21 from the table above.
MHZ10-PS	MHZ16-PS	MHZ20-PS	MHZ25-PS	MHZ32-PS	MHZ40-PS	

∗ Seal kits consist of items 19, 20 and 21 in one kit, and can be ordered using the seal kit number for each cylinder bore size.

chanhvinh.com

Dimensions

Scale: 100%

MHZ2-6□
Double acting/Single acting
Basic type

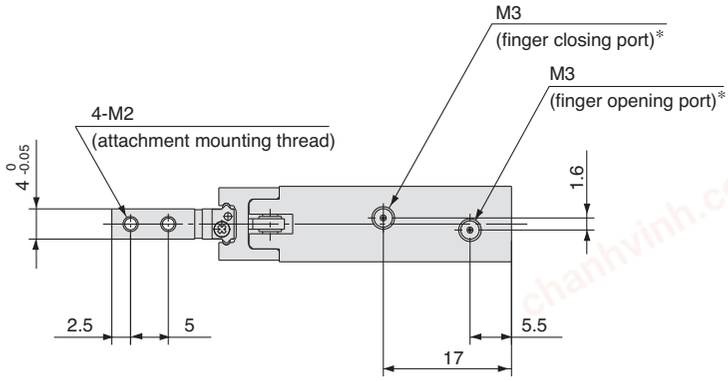

* For single action, the port on one side is a breathing hole.

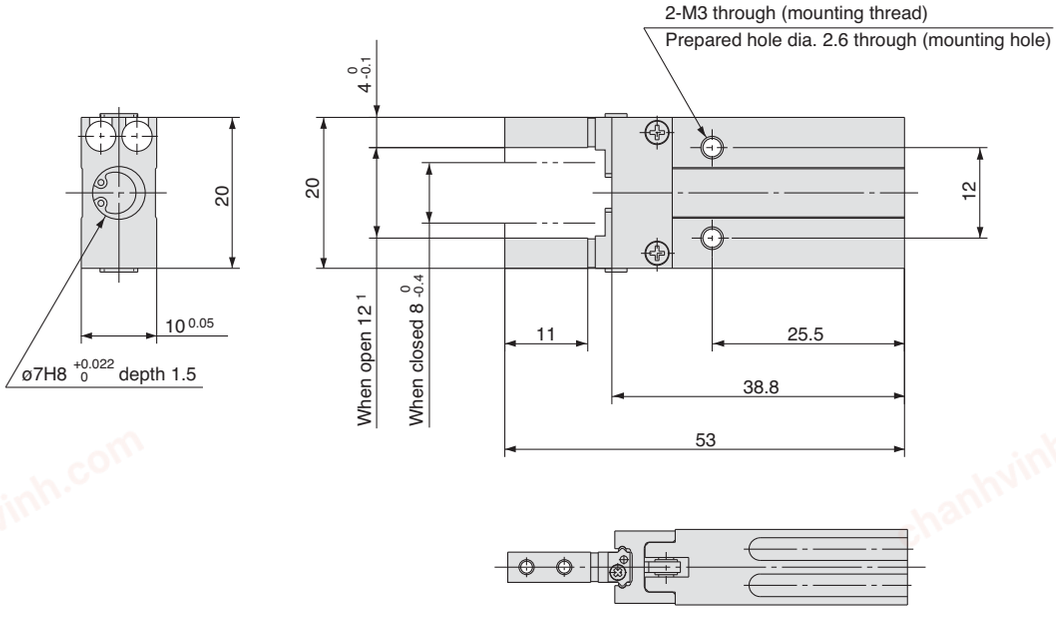

Auto switch mounting groove dimensions

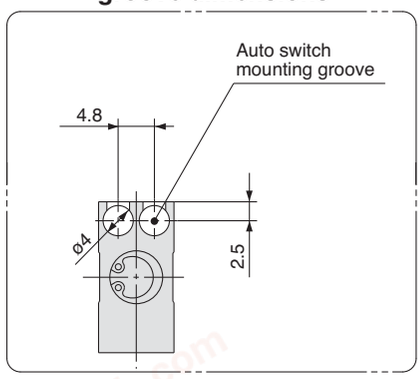

chanhvinh.com

MHZ2-10□
Double acting/Single acting
Basic type

Scale: 90%

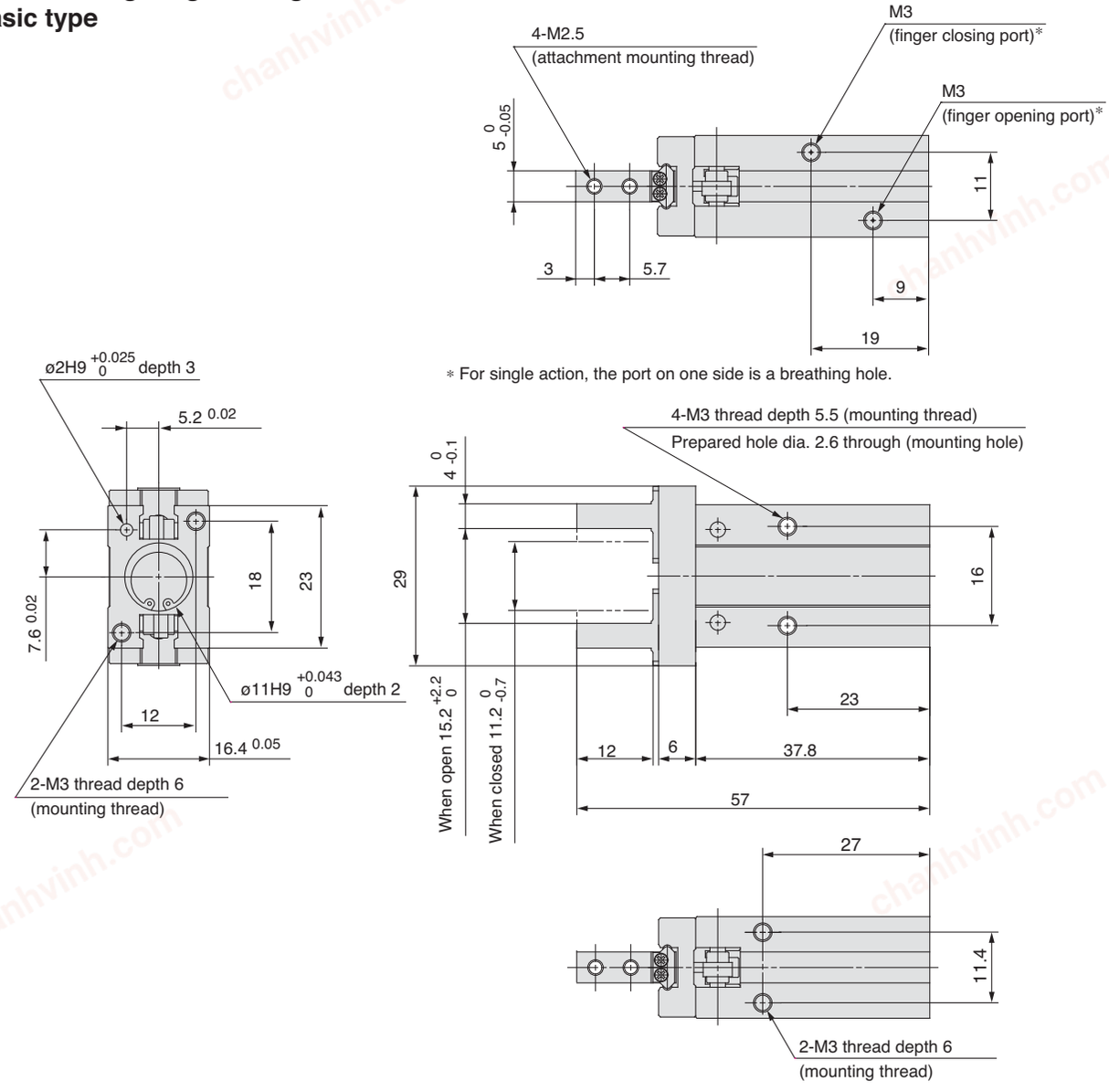

Finger position/Narrow type

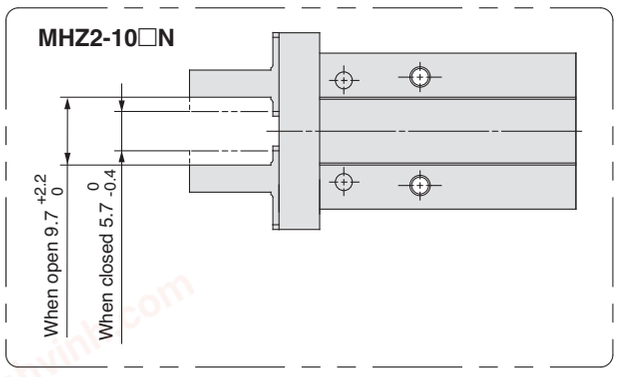

Auto switch mounting groove dimensions

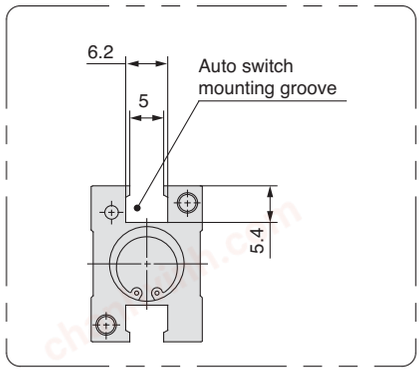

Note) When using auto switches, through hole mounting is not possible.

chanhvinh.com

Dimensions

MHZ2-16□
Double acting/Single acting
Basic type

Scale: 65%

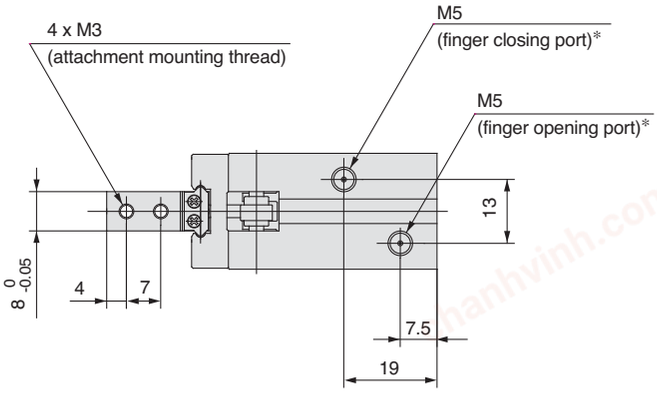

* For single action, the port on one side is a breathing hole.

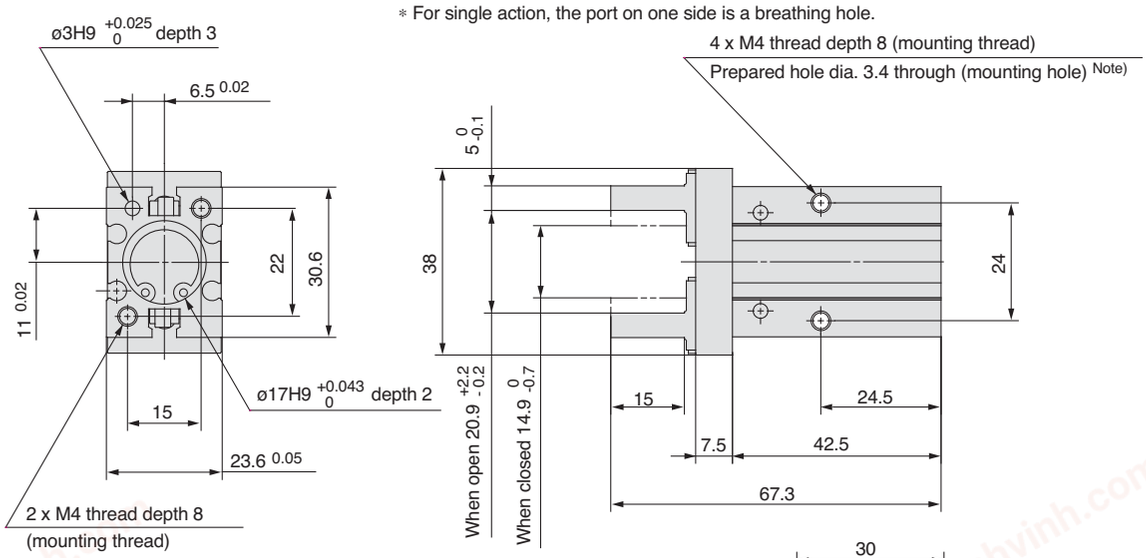

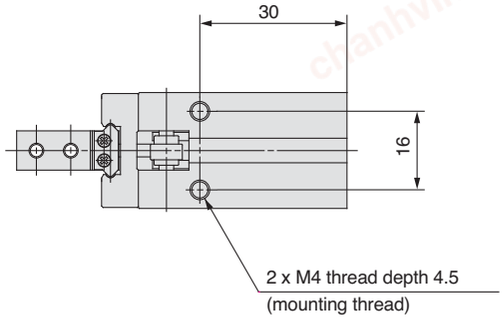

Auto switch mounting groove dimensions

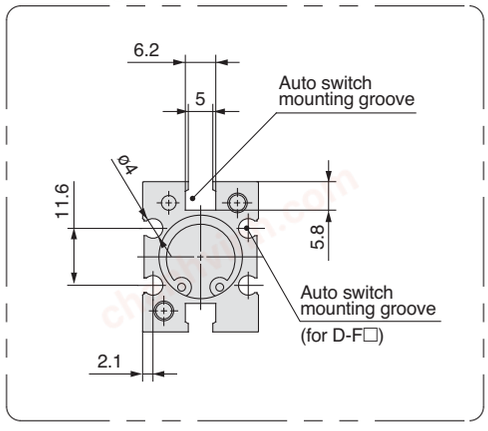

Finger position/Narrow type

MHZ2-16□N

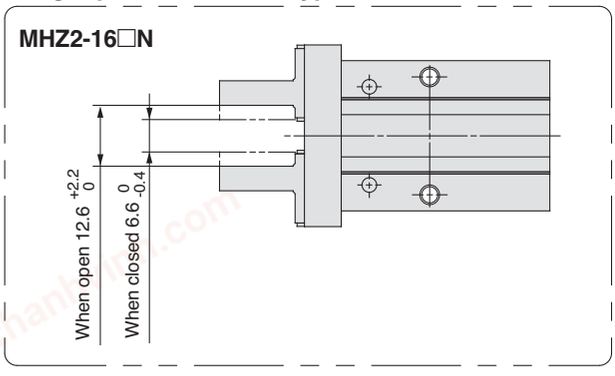

Note) When using auto switches, through hole mounting is not possible.

chanhvinh.com

MHZ2-20□
Double acting/Single acting
Basic type

Scale: 60%

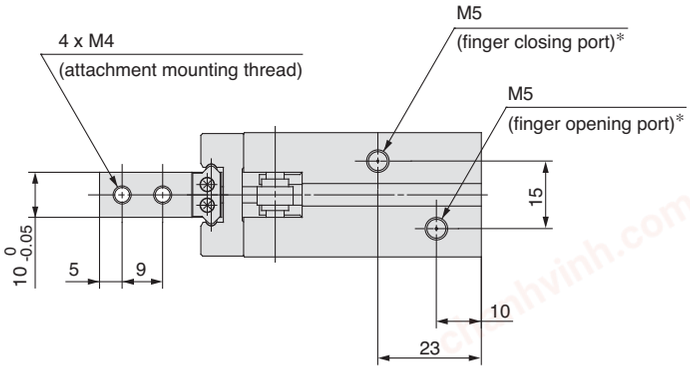

* For single action, the port on one side is a breathing hole.

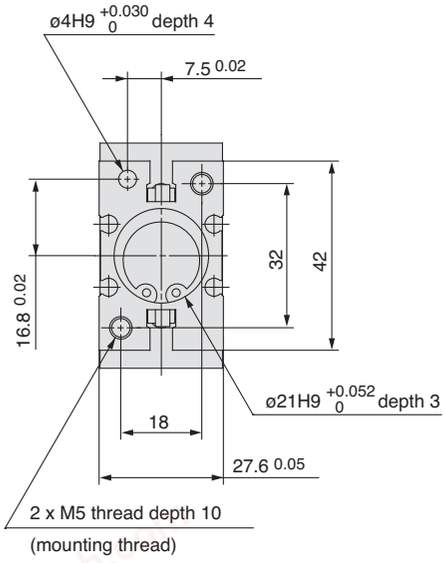

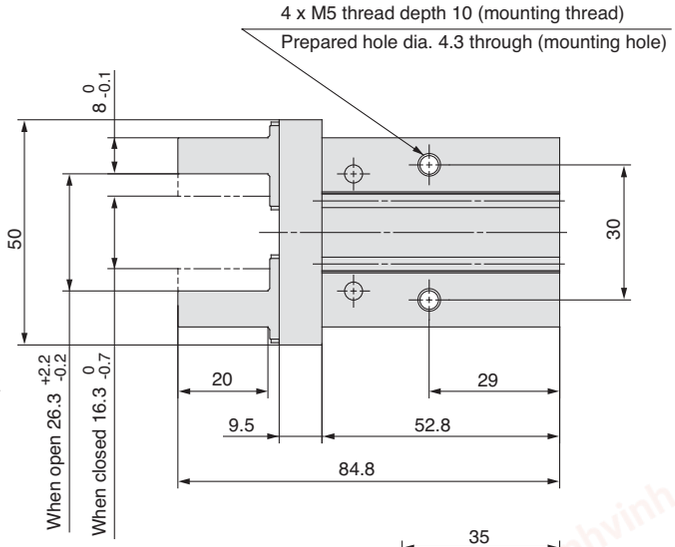

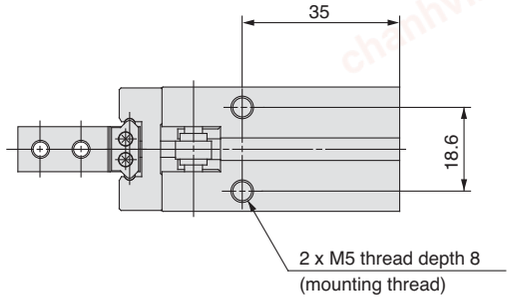

Finger position/Narrow type

MHZ2-20□N

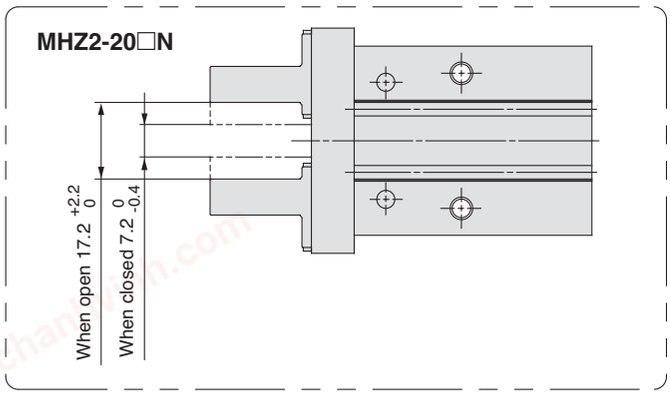

Auto switch mounting groove dimensions

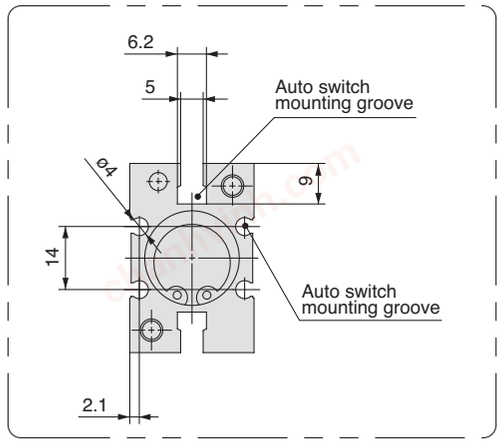

Note) When using auto switches, through hole mounting is not possible.

chanhvinh.com

Dimensions

MHZ2-25□
Double acting/Single acting
Basic type

Scale: 50%

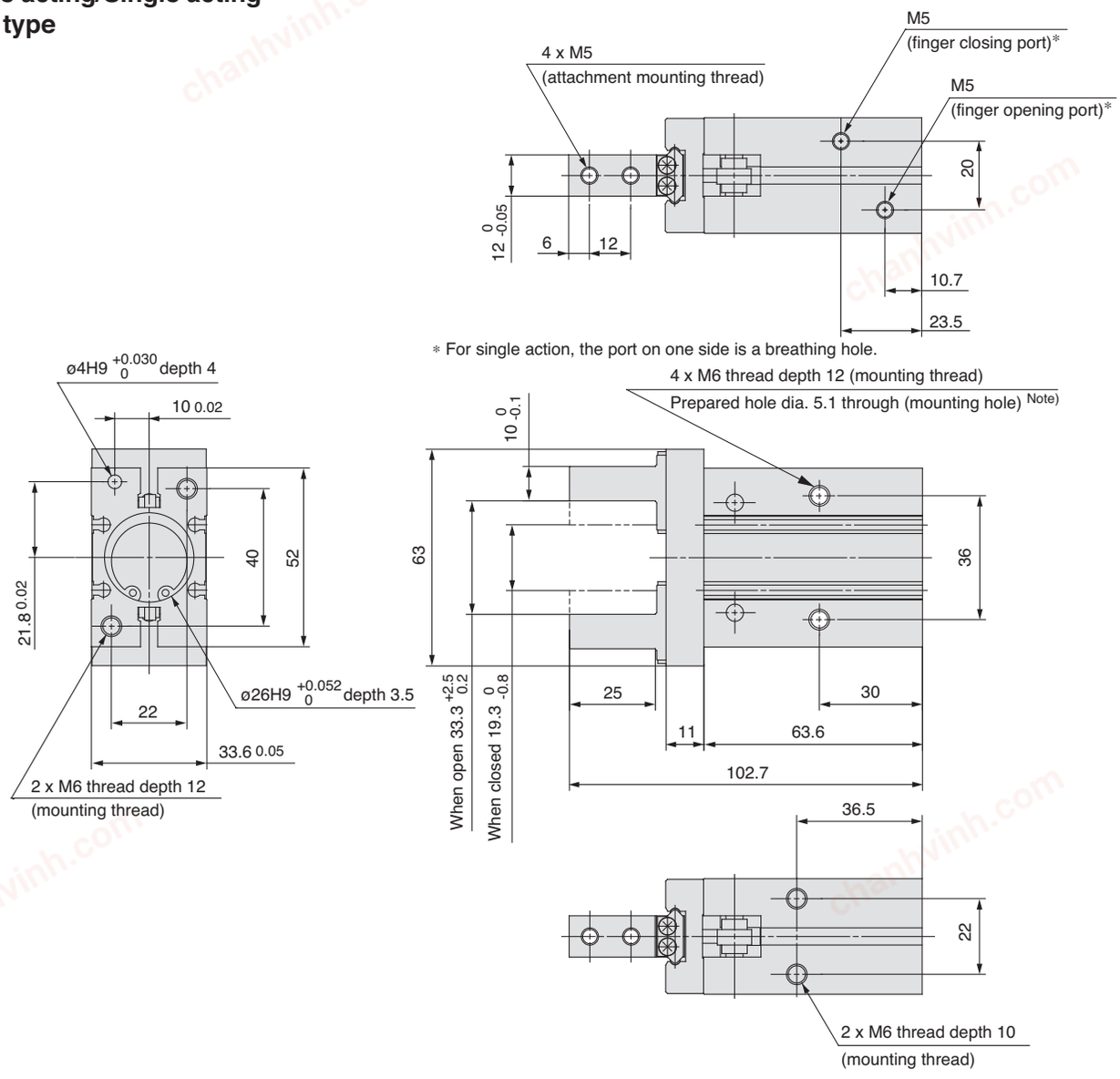

Auto switch mounting groove dimensions

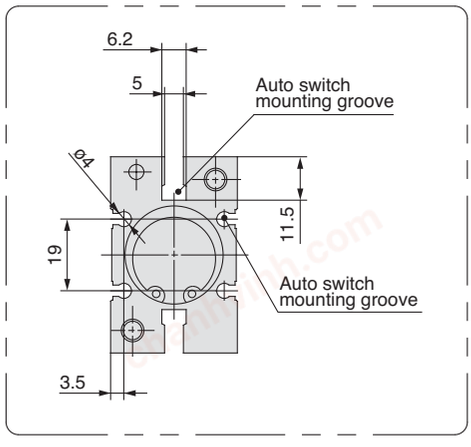

Note) When using auto switches, through hole mounting is not possible.

Finger position/Narrow type

MHZ2-25□N

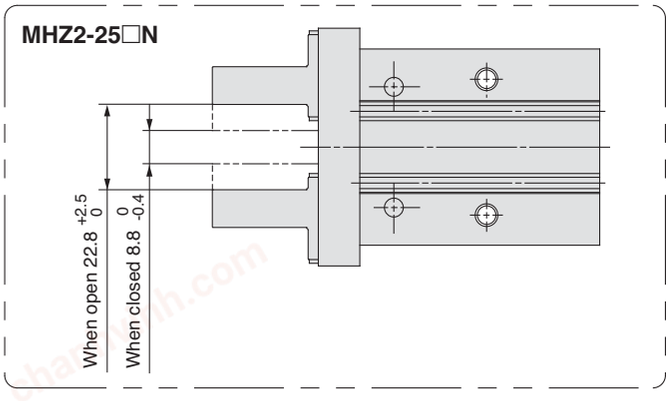

chanhvinh.com

MHZ2-32□
Double acting/Single acting
Basic Type

Scale: 40%

The values inside ( ) are dimensions for the single acting type.

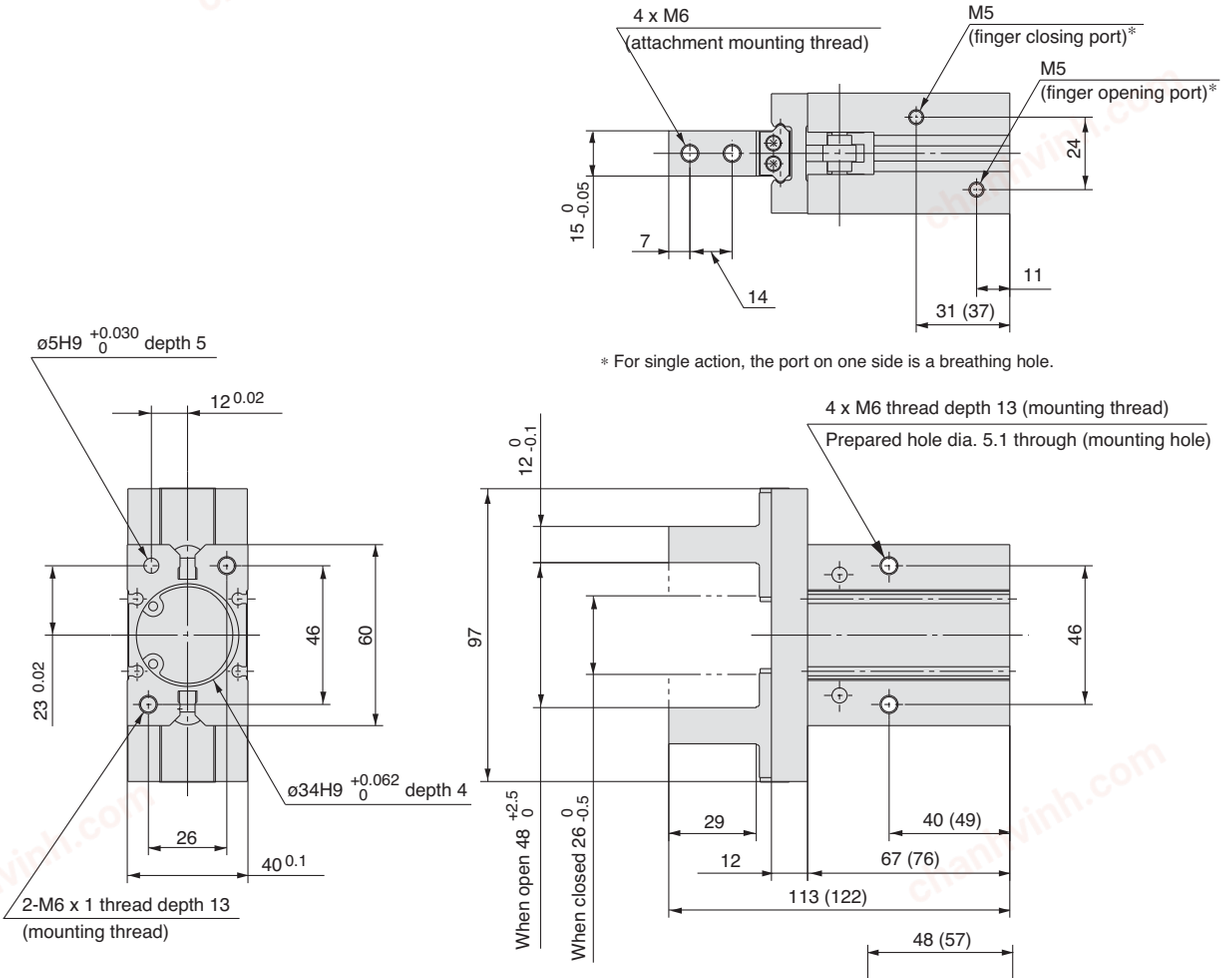

* For single action, the port on one side is a breathing hole.

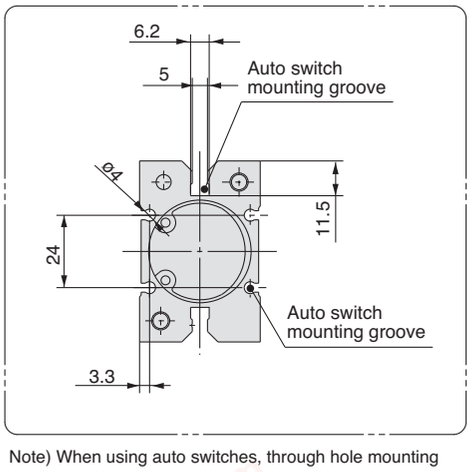

Note) When using auto switches, through hole mounting is not possible.

chanhvinh.com

Dimensions

MHZ2-40□
Double acting/Single acting
Basic type

Scale: 40%

The values inside ( ) are dimensions for the single acting type.

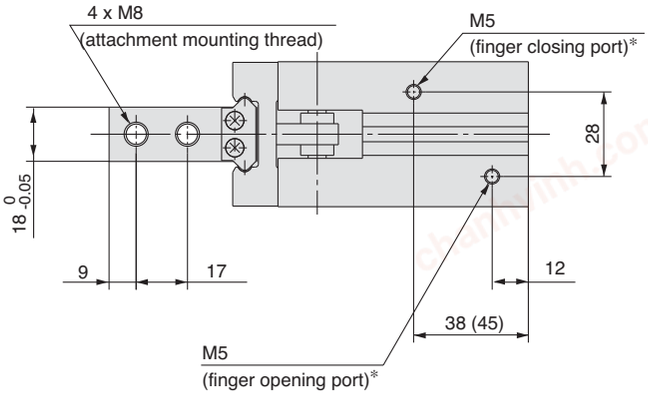

* For single action, the port on one side is a breathing hole.

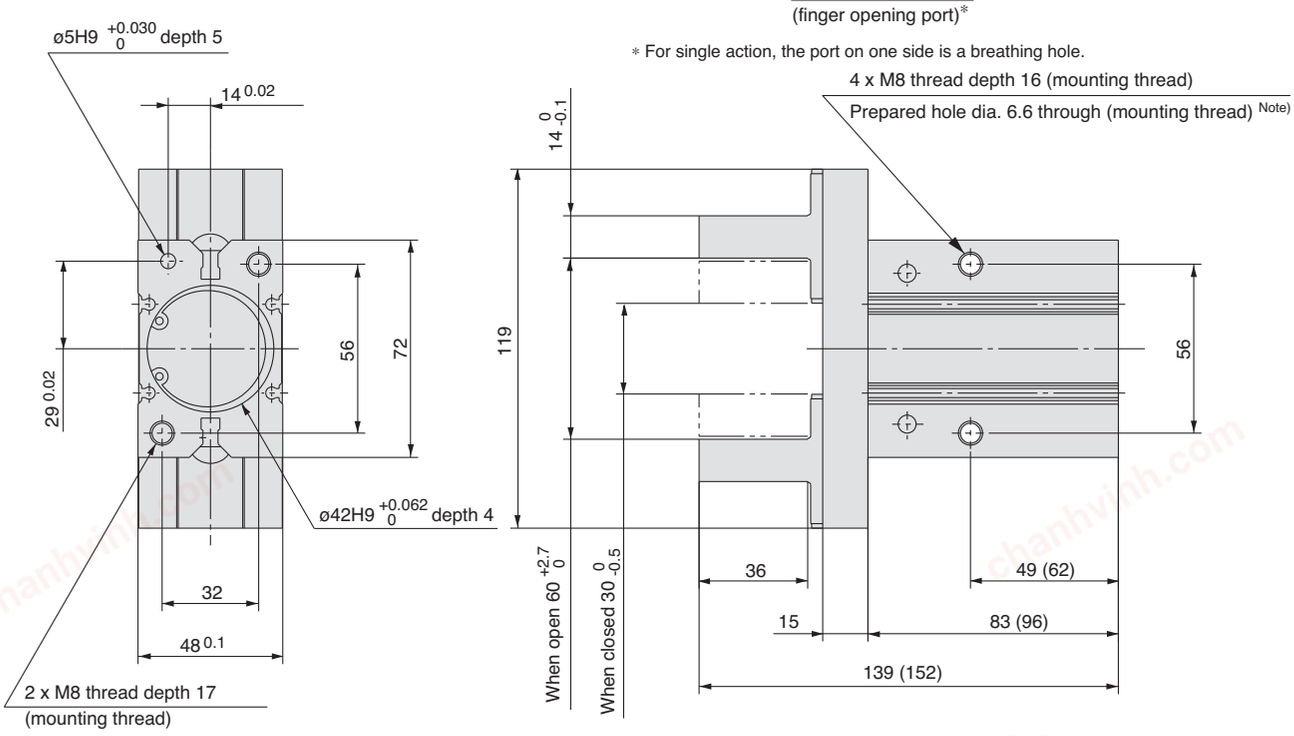

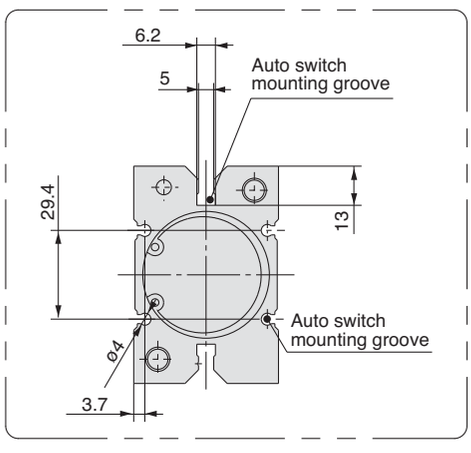

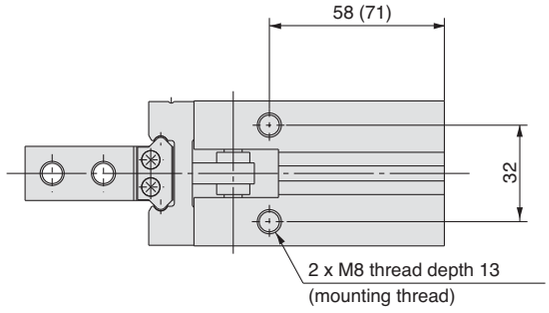

Note) When using auto switches, through hole mounting is not possible.

chanhvinh.com

Standard Type/*Series MHZ2*
Finger Options

Side Tapped Mounting [1/N1]

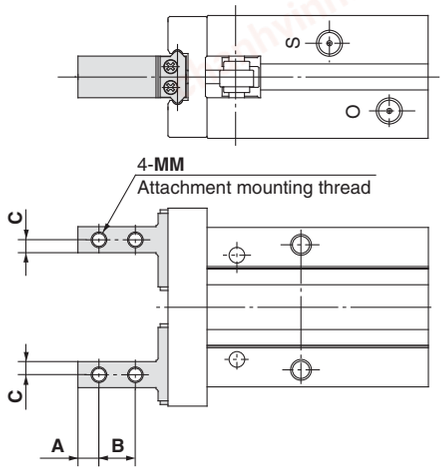

Unit: mm

Model	A	B	C	MM
MHZ2- 6□1	2.5	5	2	M2
MHZ2-10□$^{1}_{N1}$□	3	5.7	2	M2.5
MHZ2-16□$^{1}_{N1}$□	4	7	2.5	M3
MHZ2-20□$^{1}_{N1}$□	5	9	4	M4
MHZ2-25□$^{1}_{N1}$□	6	12	5	M5
MHZ2-32□1□	7	14	6	M6
MHZ2-40□1□	9	17	7	M8

∗ Specifications and dimensions other than the above are the same as the basic type (including narrow type).

Through Holes in Opening/Closing Direction [2/N2]

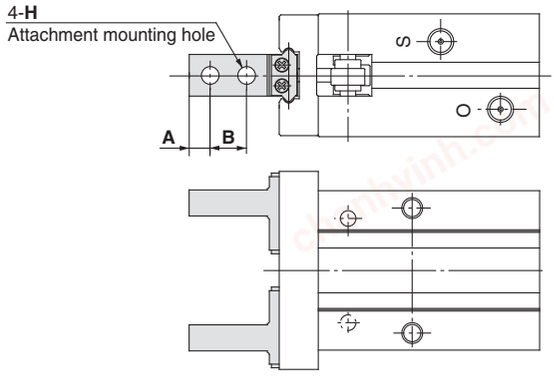

Unit: mm

Model	A	B	H
MHZ2- 6□2	2.5	5	2.4
MHZ2-10□$^{2}_{N2}$□	3	5.7	2.9
MHZ2-16□$^{2}_{N2}$□	4	7	3.4
MHZ2-20□$^{2}_{N2}$□	5	9	4.5
MHZ2-25□$^{2}_{N2}$□	6	12	5.5
MHZ2-32□2□	7	14	6.6
MHZ2-40□2□	9	17	9

∗ Specifications and dimensions other than the above are the same as the basic type (including narrow type).

Flat Type Fingers [3]

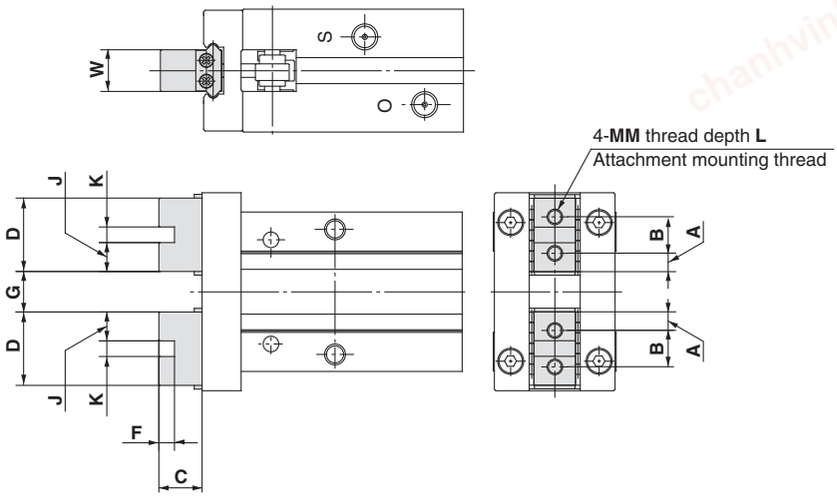

Unit: mm

Model	A	B	C	D	F	G Open	G Closed	J	K	MM	L	W	Weight g
MHZ2- 6□3 ∗1)	2	3.5	7.2	7.5	–	5 $^{+1.2}_{-0.8}$	1 $^{+0.2}_{0}$	–	–	M2	3	4 $^{0}_{-0.05}$	26
MHZ2-10□3□ ∗2), ∗3)	2.45	6	5.2	10.9	2	5.4 $^{+2.2}_{0}$	1.4 $^{0}_{-0.2}$	4.45	2H9 $^{+0.025}_{0}$	M2.5	5	5 $^{0}_{-0.05}$	55
MHZ2-16□3□ ∗2), ∗3)	3.05	8	8.3	14.1	2.5	7.4 $^{+2.2}_{0}$	1.4 $^{0}_{-0.2}$	5.8	2.5H9 $^{+0.025}_{0}$	M3	6	8 $^{0}_{-0.05}$	115
MHZ2-20□3□ ∗2), ∗3)	3.95	10	10.5	17.9	3	11.6 $^{+2.3}_{0}$	1.6 $^{0}_{-0.2}$	7.45	3H9 $^{+0.025}_{0}$	M4	8	10 $^{0}_{-0.05}$	235
MHZ2-25□3□ ∗2), ∗3)	4.9	12	13.1	21.8	4	16 $^{+2.5}_{0}$	2 $^{0}_{-0.2}$	8.9	4H9 $^{+0.030}_{0}$	M5	10	12 $^{0}_{-0.05}$	420
MHZ2-32□3□	7.3	20	18	34.6	5	25 $^{+2.7}_{0}$	3 $^{0}_{-0.2}$	14.8	5H9 $^{+0.030}_{0}$	M6	12	15 $^{0}_{-0.05}$	740 (785) ∗4)
MHZ2-40□3□	8.7	24	22	41.4	6	33 $^{+2.9}_{0}$	3 $^{0}_{-0.2}$	17.7	6H9 $^{+0.030}_{0}$	M8	16	18 $^{0}_{-0.05}$	1335 (1430) ∗4)

∗1) To mount attachments, use M2 hexagon socket head cap screws with ø3.3 top diameter, or JISB1101 type M2 round head screws.
∗2) Specifications and dimensions other than the above are the same as the basic type (including narrow type).
∗3) The overall length is the same as the MHQ(G) flat finger type.
∗4) The values inside ( ) are for the single acting type.

chanhvinh.com

Standard Type/*Series MHZ2*
Body Options: End Boss Type

Applicable Models

Symbol	Piping port position	Type of Piping Port				Applicable model		
		MHZ2-10	MHZ2-16	MHZ2-20	MHZ2-25	Double acting	Single acting	
							Normally open	Normally closed
E	Side ported	M3	M5			●	●	●
W	Axial port	With ø4 One-touch fitting for coaxial tube				●	—	—
K		With ø4 One-touch fitting				—	●	●
M		M5 x 0.8				—	●	●

Side Ported [E]

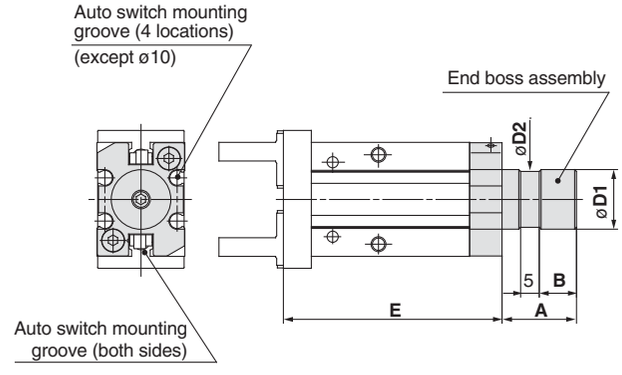

Unit: mm

Model	Kit no.	A	B	D1	D2	E
MHZ2-10□□	MHZ-A1010	15	7	12f8 $^{-0.016}_{-0.043}$	11	52.8
MHZ2-16□□	MHZ-A1610	20	10	16f8 $^{-0.016}_{-0.043}$	15	58.7
MHZ2-20□□	MHZ-A2010	22	12	20f8 $^{-0.020}_{-0.053}$	19	70.5
MHZ2-25□□	MHZ-A2510	25	15	25f8 $^{-0.020}_{-0.053}$	24	82.9

Other dimensions and specifications correspond to the standard type.

∗ Refer to the dimension table.
∗ When auto switches are used, side mounting with through holes is not possible.

Axial Port (One-Touch Fitting for Coaxial Tubing) [W]

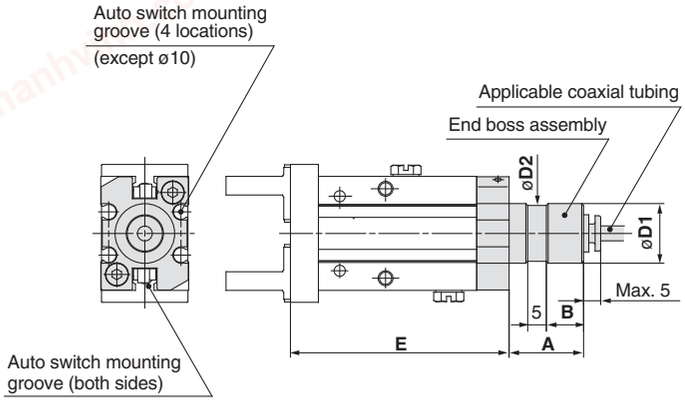

Unit: mm

Model	A	B	D1	D2	E
MHZ2-10□□	15	7	12f8 $^{-0.016}_{-0.043}$	11	52.8
MHZ2-16□□	20	10	16f8 $^{-0.016}_{-0.043}$	15	58.7
MHZ2-20□□	22	12	20f8 $^{-0.020}_{-0.053}$	19	70.5
MHZ2-25□□	25	15	25f8 $^{-0.020}_{-0.053}$	24	82.9

Other dimensions and specifications correspond to the standard type.

∗ Refer to the dimension table.
∗ When auto switches are used, side mounting with through holes is not possible.

Reference symbol

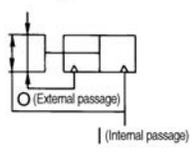

Applicable coaxial tubing

Specification \ Model	TW04B-20
Outside diameter	4mm
Max. operating pressure	0.6MPa
Min. bending radius	10mm
Operating temperature	–20 to 60°C
Material	Nylon 12

Changing from Coaxial to Single Tubing

Changing to single tubing is possible by using a branch "Y" or branch tee fitting.
In this case particularly, single tube fittings and tubing for ø3.2 will be necessary.

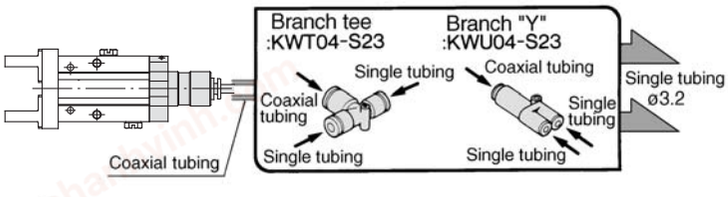

Branch tee, Different diameter tee, Branch "Y", Male run tee

Refer to catalog CAT.E004-A "Coaxial Air Tubing System" regarding coaxial tubing.

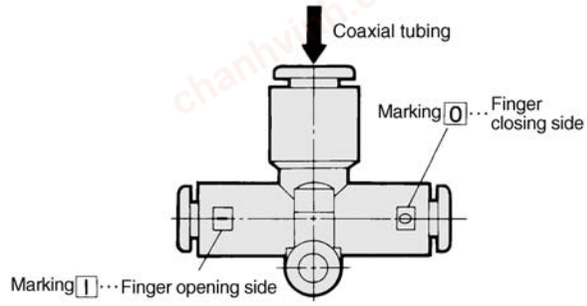

chanhvinh.com

Axial Port (with One-touch Fitting) [K]

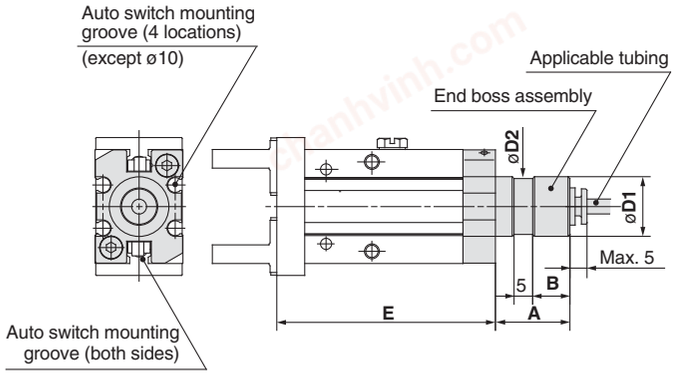

∗ Refer to the dimension table.
∗ When auto switches are used, side mounting with through holes is not possible.

Unit: mm

Model	A	B	D1	D2	E
MHZ2-10□□	15	7	12f8 $^{-0.016}_{-0.043}$	11	52.8
MHZ2-16□□	20	10	16f8 $^{-0.016}_{-0.043}$	15	58.7
MHZ2-20□□	22	12	20f8 $^{-0.020}_{-0.053}$	19	70.5
MHZ2-25□□	25	15	25f8 $^{-0.020}_{-0.053}$	24	82.9

Other dimensions and specifications correspond to the standard type.

Applicable tubing

Description/Model / Specification	Nylon tubing	Soft nylon tubing	Polyurethane tubing	Polyurethane coiled tubing
	T0425	TS0425	TU0425	TCU0425B-1
Outside diameter mm	4	4	4	4
Max. operating pressure MPa	1.0	0.8	0.5	0.5
Min. bending radius mm	13	12	10	—
Operating temperature °C	–20 to 60	–20 to 60	–20 to 60	–20 to 60
Material	Nylon 12	Nylon 12	Polyurethane	Polyurethane

Refer to catalog CAT. E501-B "Air Fittings and Tubing" regarding One-touch fittings and tubing.

Axial Port (M5 Port) [M]

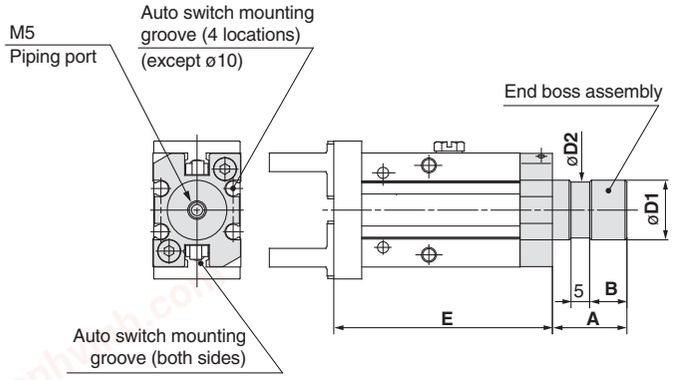

∗ Refer to the dimension table.
∗ When auto switches are used, side mounting with through holes is not possible.

Unit: mm

Model	A	B	D1	D2	E
MHZ2-10□□	15	7	12f8 $^{-0.016}_{-0.043}$	11	52.8
MHZ2-16□□	20	10	16f8 $^{-0.016}_{-0.043}$	15	58.7
MHZ2-20□□	22	12	20f8 $^{-0.020}_{-0.053}$	19	70.5
MHZ2-25□□	25	15	25f8 $^{-0.020}_{-0.053}$	24	82.9

Other dimensions and specifications correspond to the standard type.

Weights

Unit: g

Model	End boss type (symbol)			
	E	**W**	**K**	**M**
MHZ2-10□□	65	64	66	65
MHZ2-16□□	148	147	148	147
MHZ2-20□□	277	277	277	277
MHZ2-25□□	495	495	496	494

chanhvinh.com

Long Stroke
Series MHZL2

How to Order

MHZL2 — 16 D [ ] [ ] M9PV [ ]

Number of fingers

2	2 fingers

Bore size

10	10mm
16	16mm
20	20mm
25	25mm

Action

D	Double acting
S	Single acting (normally open)
C	Single acting (normally closed)

Auto switch type

Nil	Without auto switch (built-in magnet)

∗ Select an applicable auto switch model from the table below.

Number of auto switches

Nil	2 pcs.
S	1 pc.

Finger option

Nil: Basic type

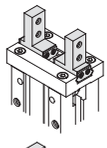

1: Side tapped mounting

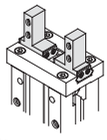

2: Through holes in opening/closing direction

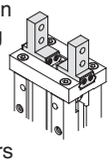

3: Flat type fingers

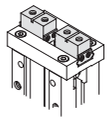

Body option

Nil: Basic type

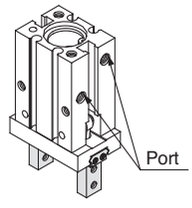

E: End boss type Side ported (double acting/ single acting)

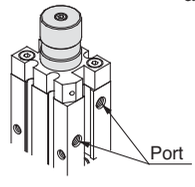

W: End boss type Axial port with ø4 One-touch fitting for coaxial tubing (double acting)

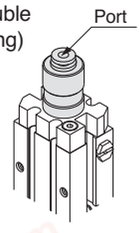

K: End boss type Axial port with ø4 One-touch fitting (single acting)

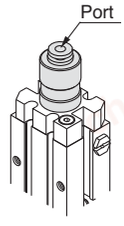

M: End boss type Axial M5 port (single acting)

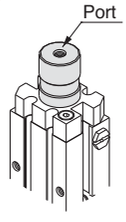

Applicable Auto Switches

Type	Special function	Electrical entry	Indicator light	Wiring (Output)	Load voltage DC	Load voltage AC	Auto switch model: Perpendicular	Auto switch model: In-line	Lead wire length (m) ∗: 0.5 (Nil)	1 (M)	3 (L)	5 (Z)	Applicable model: ø10	ø16	ø20	ø25	Pre-wired connector	Applicable load:	
Solid state auto switch	—	Grommet	Yes	3-wire (NPN)	5V, 12 V	—	M9NV	M9N	●	●	●	○	●	●	●	●	○	IC circuit	Relay, PLC
							F8N	—	●	—	●	○	—	●	●	●	—		
				3-wire (PNP)			M9PV	M9P	●	●	●	○	●	●	●	●	○		
							F8P	—	●	—	●	○	—	●	●	●	—		
				2-wire	12 V		M9BV	M9B	●	●	●	○	●	●	●	●	○	—	
							F8B	—	●	—	●	○	—	●	●	●	—		
	Diagnosis (2-colour indicator)			3-wire (NPN)	5 V, 12 V		M9NWV	M9NW	●	●	●	○	●	●	●	●	○	IC circuit	
				3-wire (PNP)			M9PWV	M9PW	●	●	●	○	●	●	●	●	○		
				2-wire	12 V		M9BWV	M9BW	●	●	●	○	●	●	●	●	○	—	
	Water resistant (2-colour indicator)			3-wire (NPN)	5 V, 12 V		M9NAV**	M9NA**	○	○	●	○	●	●	●	●	○	IC circuit	
				3-wire (PNP)			M9PAV**	M9PA**	○	○	●	○	●	●	●	●	○		
				2-wire	12 V		M9BAV**	M9BA**	○	○	●	○	●	●	●	●	○	—	

∗∗ Water resistant type auto switches can be mounted on the above models, but in such case SMC cannot guarantee water resistance.

∗ Lead wire length symbols: 0.5 m····· Nil (Example) M9NW
1 m····· M (Example) M9NWM
3 m····· L (Example) M9NWL
5 m····· Z (Example) M9NWZ

∗ Solid state auto switches marked with ○ are produced upon receipt of order.

Note 1) When using the 2-colour indicator type, please make the setting so that the indicator is lit in red to ensure the detection at the proper position of the air gripper.
Note 2) Through-hole mounting is not possible when using the auto switch at the square groove on the side.
Note 3) When the product is ordered with auto switch, only MHZ2-10 is shipped with the auto switch mounting brackets. When the auto switch is used at the square groove on the side with MHZ2-16 to 25, mounting brackets (BMG2-012) are required. Order them separately.

chanhvinh.com



Specifications

Fluid			Air
Operating pressure	**Double acting**		ø10: 0.2 to 0.7MPa ø16 to ø25: 0.1 to 0.7MPa
	Single acting	**Normally open**	ø10: 0.35 to 0.7MPa
		Normally closed	ø16 to ø25: 0.25 to 0.7MPa
Ambient and fluid temperature			–10 to 60°C
Repeatability			±0.01mm
Maximum operating frequency			120c.p.m.
Lubrication			Non-lube
Action			Double acting, Single acting
Auto switch (option) Note)			Solid state switch (3 wire, 2 wire)

Symbols:

Double acting type

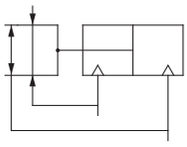

Single acting type, normally open

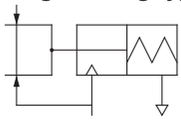

Single acting type, normally closed

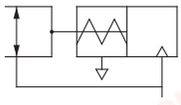

Models

Action		Model	Bore size (mm)	Gripping force Note 1)		Opening/ Closing stroke (both sides) mm	Note 2) Weight g
				Gripping force per finger Effective value N			
				External gripping force	Internal gripping force		
Double acting		**MHZL2-10D**	10	11	17	8	60
		MHZL2-16D	16	34	45	12	135
		MHZL2-20D	20	42	66	18	270
		MHZL2-25D	25	65	104	22	470
Single acting	Normally open	**MHZL2-10S**	10	7.1	—	8	70
		MHZL2-16S	16	27		12	145
		MHZL2-20S	20	33		18	290
		MHZL2-25S	25	50		22	515
	Normally closed	**MHZL2-10C**	10	—	13	8	70
		MHZL2-16C	16		38	12	140
		MHZL2-20C	20		57	18	290
		MHZL2-25C	25		85	22	515

Note 1) Values based on pressure of 0.5MPa, gripping point L = 20mm, at center of stroke.
Note 2) Values excluding weight of auto switch.

Options

• Body options/End boss type

Symbol	Piping port position	Type of piping port				Applicable model	
		MHZL2-10	**MHZL2-16**	**MHZL2-20**	**MHZL2-25**	Double acting	Single acting
Nil	Basic type	M3	M5			●	●
E	Side ported	M3	M5			●	●
W	Axial port	With ø4 One-touch fitting for coaxial tube				●	—
K	Axial port	With ø4 One-touch fitting				—	●
M	Axial port	M5				—	●

∗ For detailed body option specifications, refer to option specifications on pages 5-42 and 5-43

chanhvinh.com

Construction/MHZL2-10□ to 25□

Double acting/with fingers open

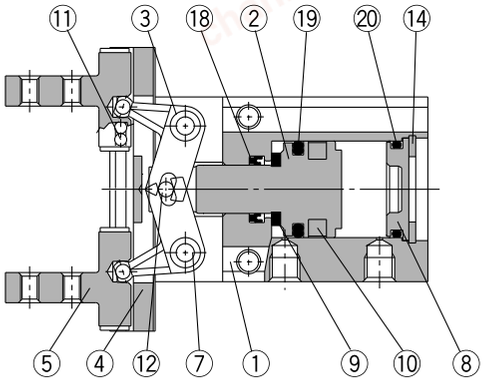

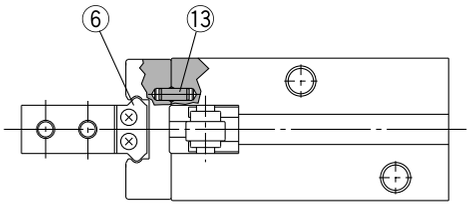

Single acting/normally open

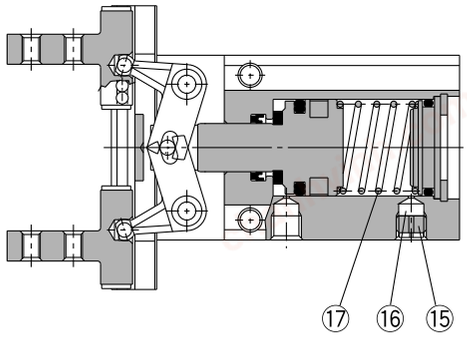

Single acting/normally closed

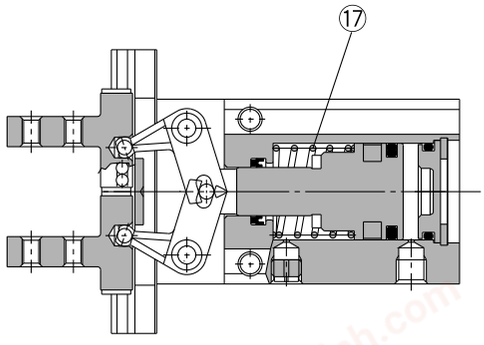

Double acting/with fingers closed

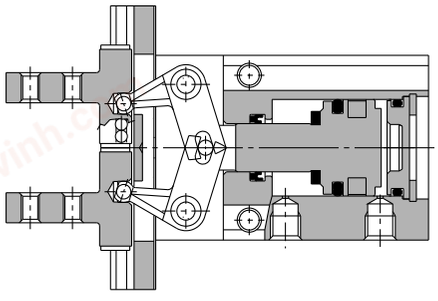

Parts list

No.	Description	Material	Note
1	**Body**	Aluminum alloy	Hard anodized
2	**Piston**	ø10, ø16: Stainless steel ø20, ø25: Aluminum alloy	ø20, ø25: Hard anodized
3	**Lever**	Stainless steel	Heat treated
4	**Guide**	Stainless steel	Heat treated
5	**Finger**	Stainless steel	Heat treated
6	**Roller stopper**	Stainless steel	
7	**Lever shaft**	Stainless steel	Nitrided
8	**Cap**	Aluminum alloy	Clear anodized
9	**Bumper**	Urethane rubber	
10	**Rubber magnet**	Synthetic rubber	

Parts list

No.	Description	Material	Note
11	**Steel balls**	High carbon chromium bearing steel	
12	**Needle roller**	High carbon chromium bearing steel	
13	**Parallel pin**	Stainless steel	
14	**C type snap ring**	Carbon steel	Nickel plated
15	**Exhaust plug A**	Brass	Electroless nickel plated
16	**Exhaust filter A**	Polyvinyl formal	
17	**Spring**	Stainless steel spring wire	
18	**Rod seal**	NBR	
19	**Piston seal**	NBR	
20	**O-ring**	NBR	

Replacement parts: Seal kits

Seal kit no.				Description
MHZL2-10D	**MHZL2-16D**	**MHZL2-20D**	**MHZL2-25D**	Kits include items 18, 19 and 20 from the table above.
MHZL10-PS	MHZL16-PS	MHZL20-PS	MHZL25-PS	

* Seal kits consist of items 18, 19 and 20 in one kit, and can be ordered using the seal kit number for each cylinder bore size.

chanhvinh.com

Dimensions

MHZL2-10□
Double acting/Single acting
Basic type

Scale: 100%

The values inside ( ) are dimensions for the single acting type.

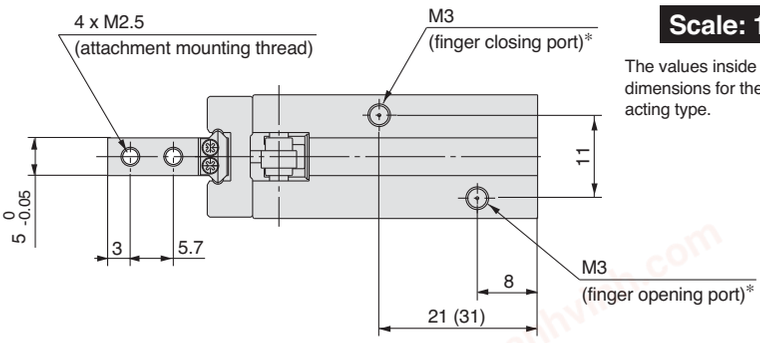

* For single action, the port on one side is a breathing hole.

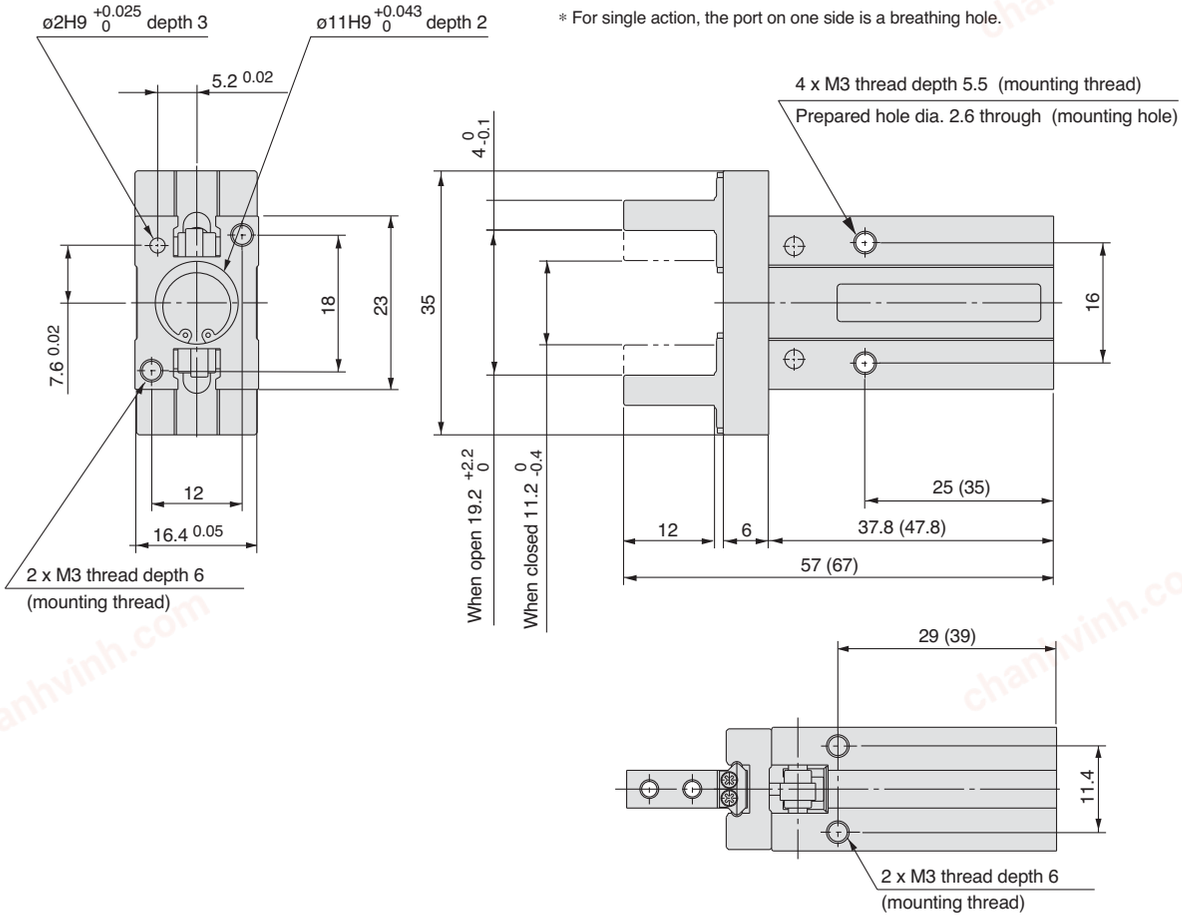

Auto switch mounting groove dimensions

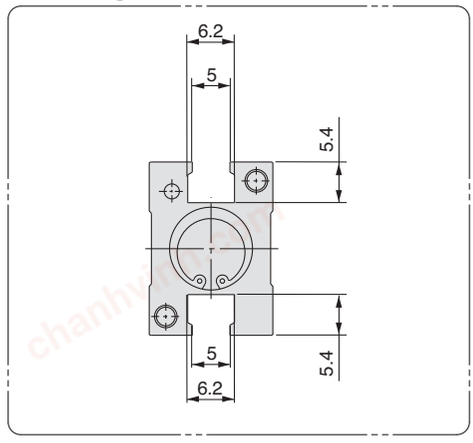

Noe) When using auto switches, through hole mounting is not possible.

chanhvinh.com

Dimensions

MHZL2-16□
Double acting/Single acting
Basic type

Scale: 75%

The values inside ( ) are dimensions for the single acting type.

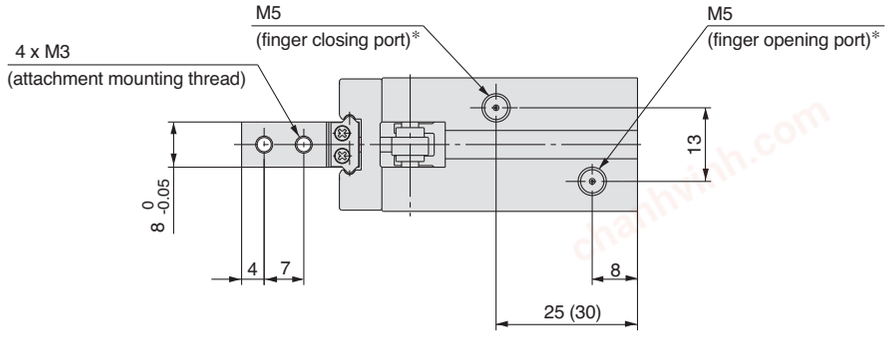

* For single action, the port on one side is a breathing hole.

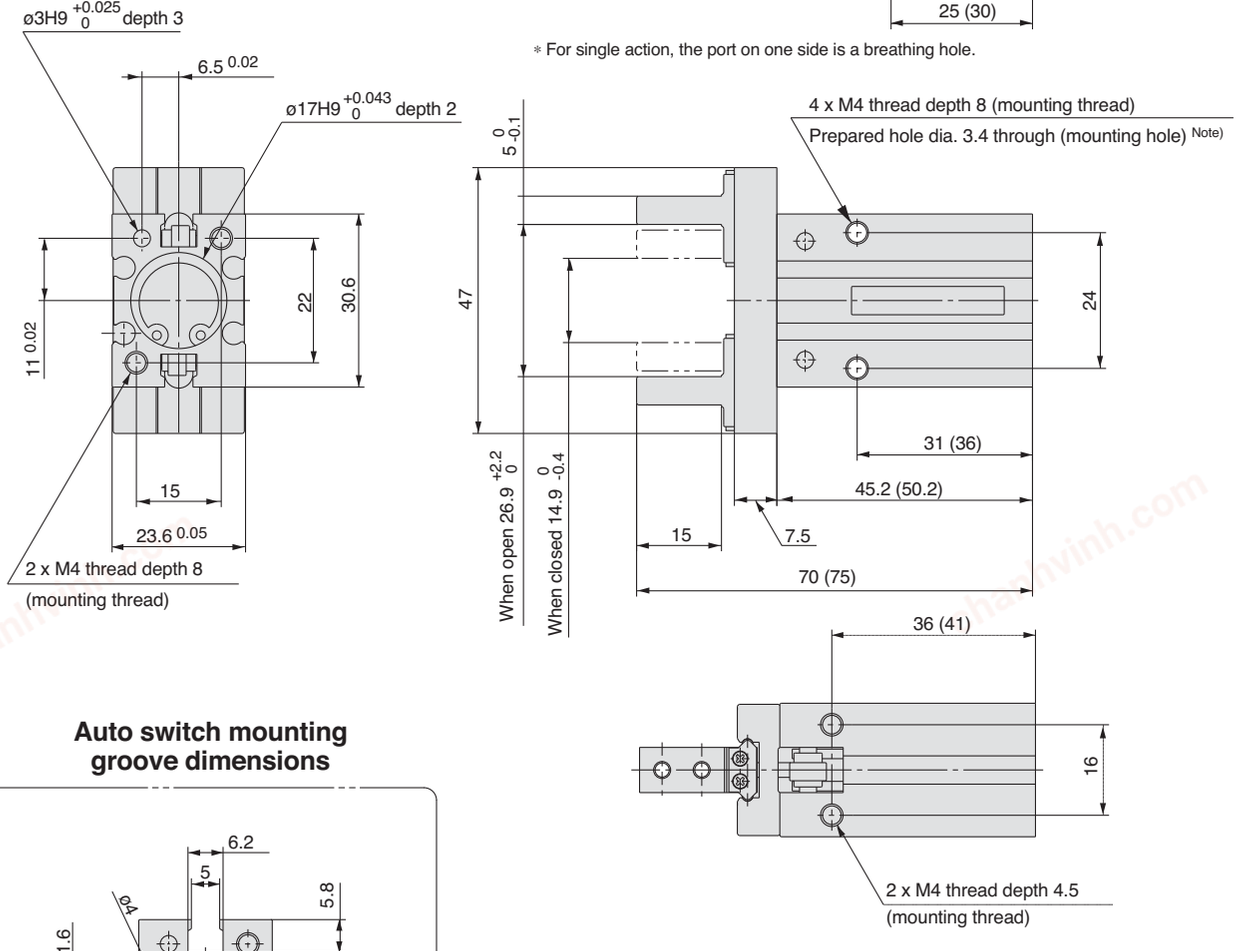

Auto switch mounting groove dimensions

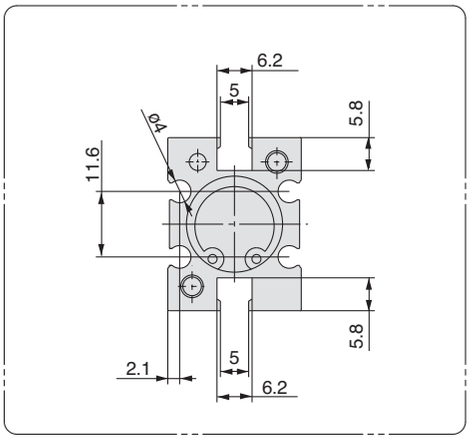

Note) When using auto switches, through hole mounting is not possible.

chanhvinh.com

MHZL2-20□
Double acting/Single acting
Basic type

Scale: 60%

The values inside ( ) are dimensions for the single acting type.

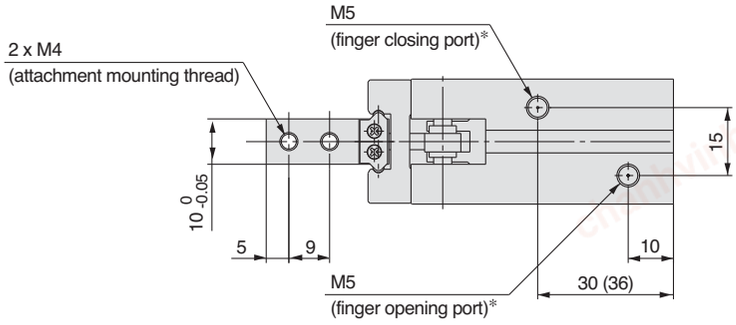

* For single action, the port on one side is a breathing hole.

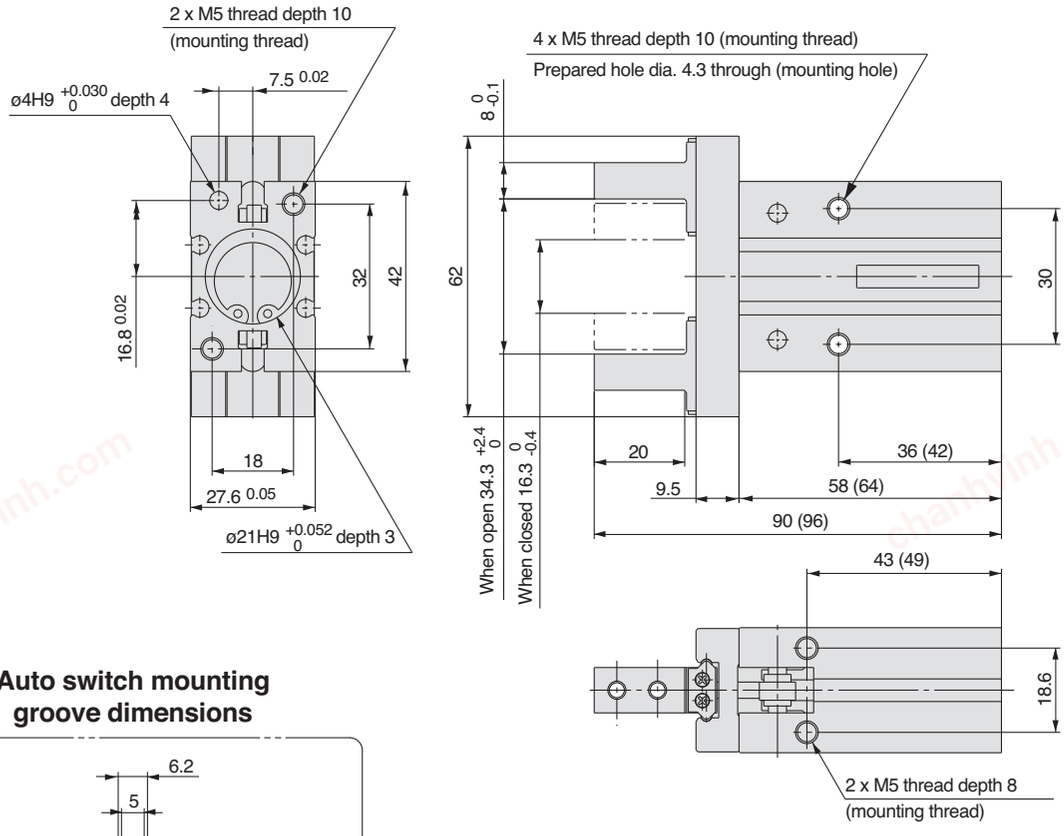

Auto switch mounting groove dimensions

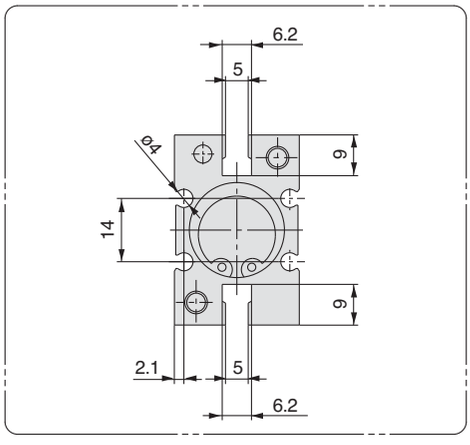

Note) When using auto switches, through hole mounting is not possible.

chanhvinh.com

Dimensions

MHZL2-25□
Double acting/Single acting
Basic type

Scale: 50%

The values inside ( ) are dimensions for the single acting type.

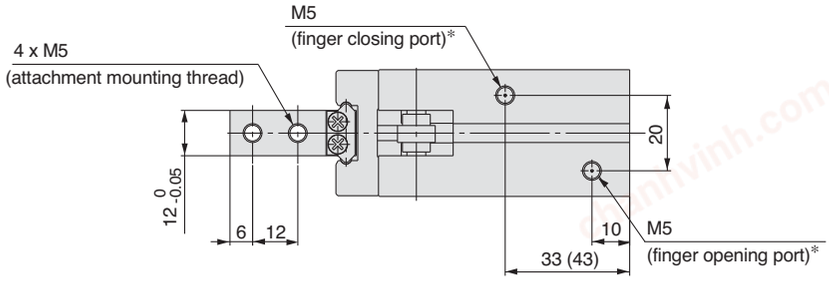

* For single action, the port on one side is a breathing hole.

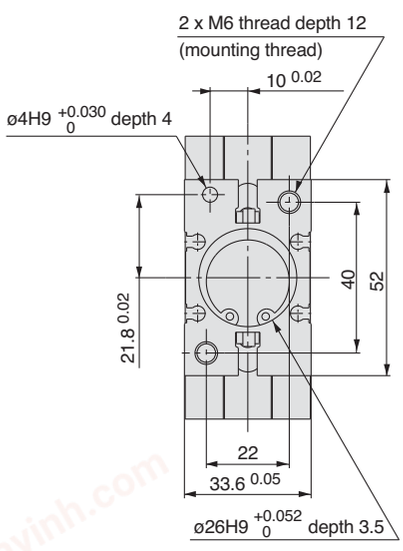

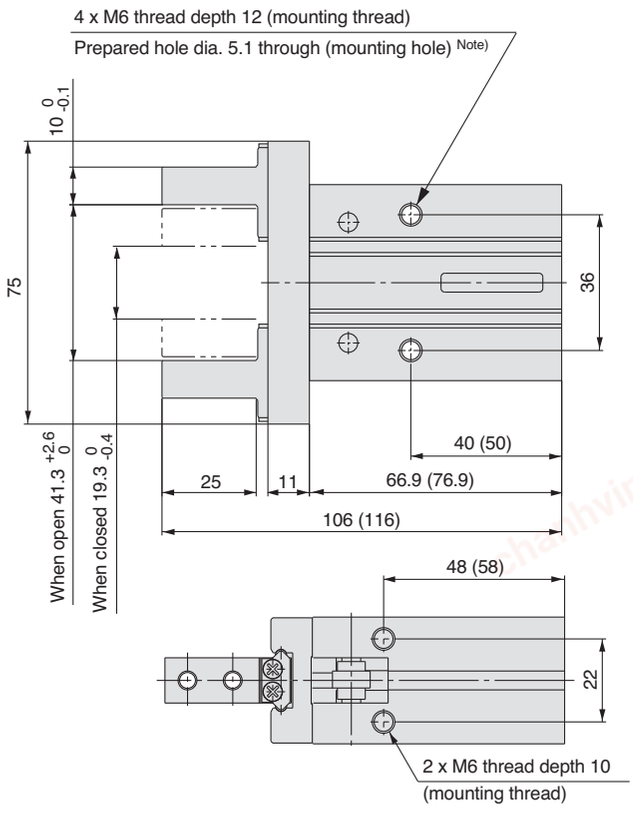

Auto switch mounting groove dimensions

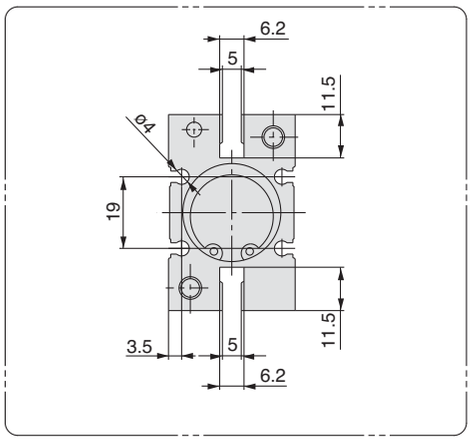

Note) When using auto switches, through hole mounting is not possible.

chanhvinh.com

Long Stroke/*Series MHZL2*
Finger Options

Side Tapped Mounting [1]

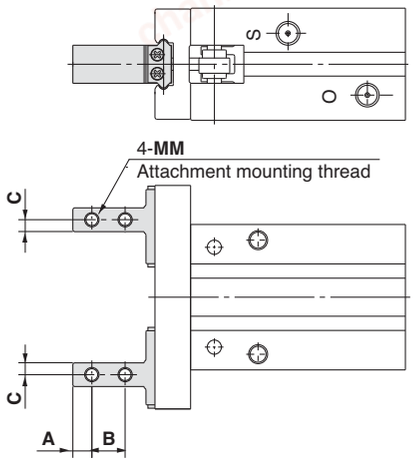

Unit: mm

Model	A	B	C	MM
MHZL2-10□1□	3	5.7	2	M2.5
MHZL2-16□1□	4	7	2.5	M3
MHZL2-20□1□	5	9	4	M4
MHZL2-25□1□	6	12	5	M5

∗ Specifications and dimensions other than the above are the same as the basic type.

Through Holes in Opening/Closing Direction [2]

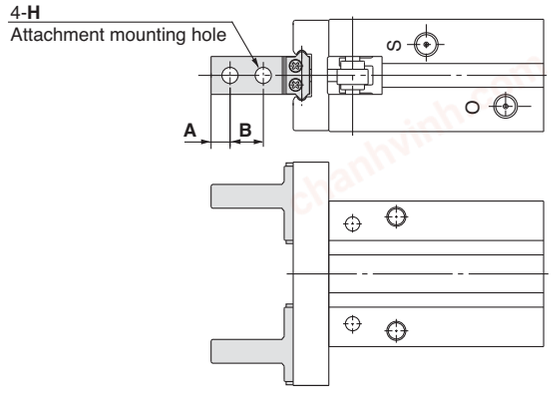

Unit: mm

Model	A	B	H
MHZL2-10□2□	3	5.7	2.9
MHZL2-16□2□	4	7	3.4
MHZL2-20□2□	5	9	4.5
MHZL2-25□2□	6	12	5.5

∗ Specifications and dimensions other than the above are the same as the basic type.

Flat Type Fingers [3]

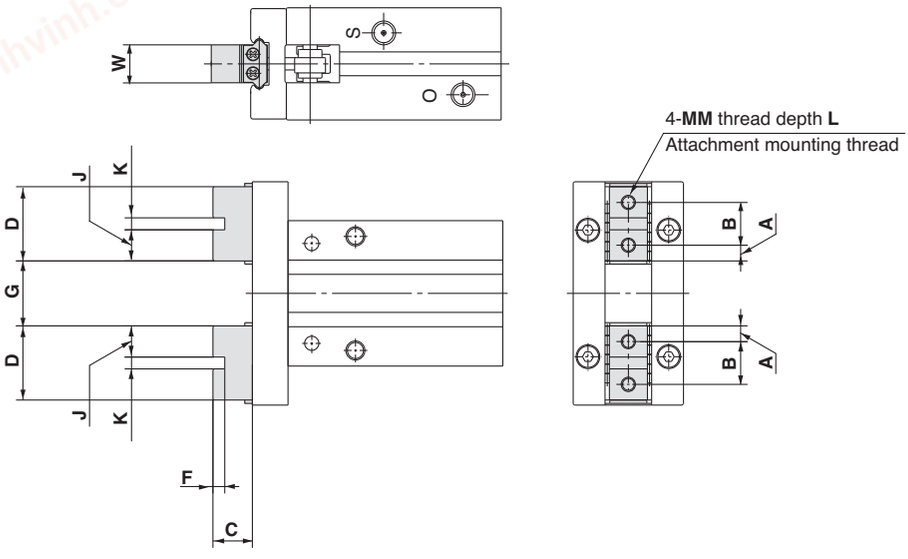

Unit: mm

Model	A	B	C	D	F	G		J	K	MM	L	W	Weight g	
						Open	Closed						Double acting	Single acting
MHZL2-10□3□	2.45	7	5.2	11.9	2	$9.4^{+2.2}_{0}$	$1.4^{0}_{-0.2}$	4.95	$2H9^{+0.025}_{0}$	M2.5	5	$5^{0}_{-0.05}$	60	70
MHZL2-16□3□	3.3	9	8.3	15.6	2.5	$13.4^{+2.2}_{0}$	$1.4^{0}_{-0.2}$	6.55	$2.5H9^{+0.025}_{0}$	M3	6	$8^{0}_{-0.05}$	135	145
MHZL2-20□3□	3.95	12	10.5	19.9	3	$19.6^{+2.4}_{0}$	$1.6^{0}_{-0.2}$	8.45	$3H9^{+0.025}_{0}$	M4	8	$10^{0}_{-0.05}$	270	290
MHZL2-25□3□	4.9	14	13.1	23.8	4	$24^{+2.6}_{0}$	$2^{0}_{-0.2}$	9.9	$4H9^{+0.030}_{0}$	M5	10	$12^{0}_{-0.05}$	460	505

∗ Specifications and dimensions other than the above are the same as the basic type.

chanhvinh.com

Long Stroke/*Series MHZL2*
Body Options: End Boss Type

Applicable Models

Symbol	Piping port position	Type of Piping Port				Applicable model		
		MHZL2-10	MHZL2-16	MHZL2-20	MHZL2-25	Double acting	Single acting	
							Normally open	Normally closed
E	Side ported	M3	M5			●	●	●
W	Axial port	With ø4 One-touch fitting for coaxial tube				●	—	—
K		With ø4 One-touch fitting				—	●	●
M		M5 x 0.8				—	●	●

Side Ported [E]

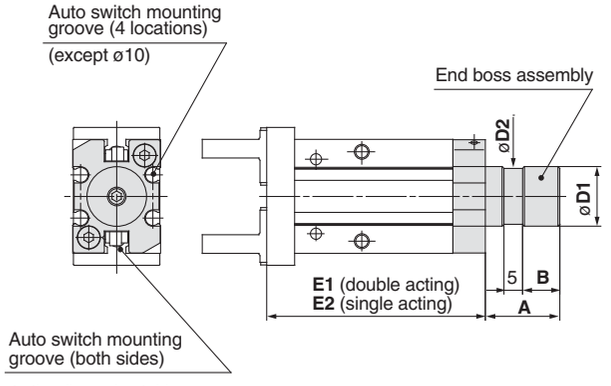

Unit: mm

Model	Kit no.	A	B	D1	D2	E1	E2
MHZL2-10□□	MHZ-A1010	15	7	12f8 $^{-0.016}_{-0.043}$	11	52.8	62.8
MHZL2-16□□	MHZ-A1610	20	10	16f8 $^{-0.016}_{-0.043}$	15	61.4	66.4
MHZL2-20□□	MHZ-A2010	22	12	20f8 $^{-0.020}_{-0.053}$	19	75.7	81.7
MHZL2-25□□	MHZ-A2510	25	15	25f8 $^{-0.020}_{-0.053}$	24	86.2	96.2

Other dimensions and specifications correspond to the standard type.

∗ Refer to the dimension table.
∗ When auto switches are used, side mounting with through holes is not possible.

Axial Port (One-touch Fitting for Coaxial Tubing) [W]

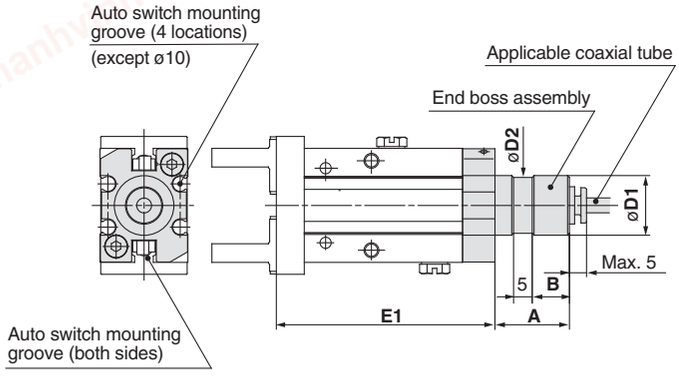

Unit: mm

Model	A	B	D1	D2	E1
MHZL2-10□□	15	7	12f8 $^{-0.016}_{-0.043}$	11	52.8
MHZL2-16□□	20	10	16f8 $^{-0.016}_{-0.043}$	15	61.4
MHZL2-20□□	22	12	20f8 $^{-0.020}_{-0.053}$	19	75.7
MHZL2-25□□	25	15	25f8 $^{-0.020}_{-0.053}$	24	86.2

Other dimensions and specifications correspond to the standard type.

∗ Refer to the dimension table.
∗ When auto switches are used, side mounting with through holes is not possible.

Reference symbol

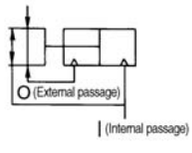

Applicable coaxial tubing

Specification \ Model	TW04B-20
Outside diameter	4mm
Max. operating pressure	0.6MPa
Min. bending radius	10mm
Operating temperature	–20 to 60°C
Material	Nylon 12

Changing from Coaxial to Single Tubing

Changing to single tubing is possible by using a branch "Y" or branch tee fitting.
In this case particularly, single tube fittings and tubing for ø3.2 will be necessary.

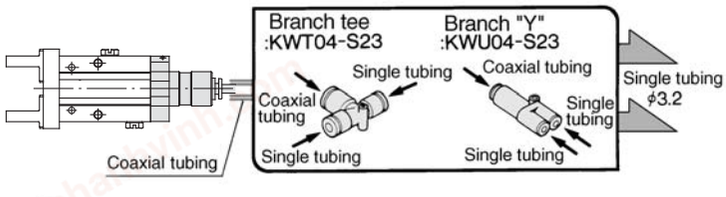

Branch tee, Different diameter tee, Branch "Y", Male run tee

Refer to catalogue CAT.E004-A "Coaxial Air Tubing System" regarding coaxial tubing.

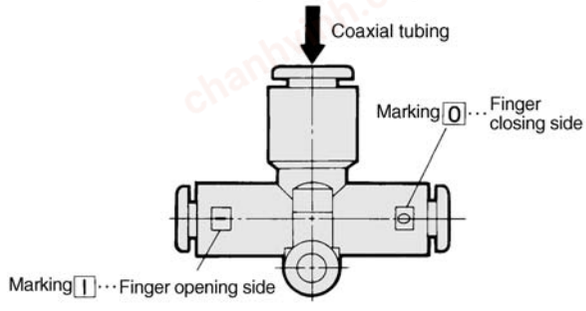

chanhvinh.com

Axial Port (with One-touch Fitting) [K]

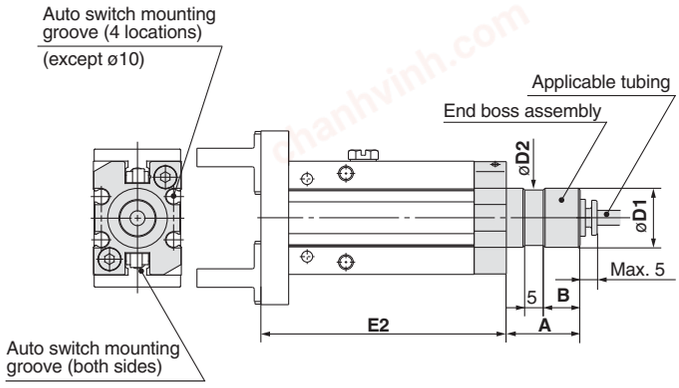

∗ Refer to the dimension table.
∗ When auto switches are used, side mounting with through holes is not possible.

Unit: mm

Model	A	B	D1	D2	E2
MHZL2-10□□	15	7	12f8 $^{-0.016}_{-0.043}$	11	62.8
MHZL2-16□□	20	10	16f8 $^{-0.016}_{-0.043}$	15	66.4
MHZL2-20□□	22	12	20f8 $^{-0.020}_{-0.053}$	19	81.7
MHZL2-25□□	25	15	25f8 $^{-0.020}_{-0.053}$	24	96.2

Other dimensions and specifications correspond to the standard type.

Applicable tubing

Description / Model / Specification	Nylon tubing	Soft nylon tubing	Polyurethane tubing	Polyurethane coiled tubing
	T0425	TS0425	TU0425	TCU0425B-1
Outside diameter mm	4	4	4	4
Max. operating pressure MPa	1.0	0.8	0.5	0.5
Min. bending radius mm	13	12	10	—
Operating temperature °C	–20 to 60	–20 to 60	–20 to 60	–20 to 60
Material	Nylon 12	Nylon 12	Polyurethane	Polyurethane

Refer to catalog CAT. 501-B "Air Fittings and Tubing" regarding One-touch fittings and tubing.

Axial Port (M5 Port) [M]

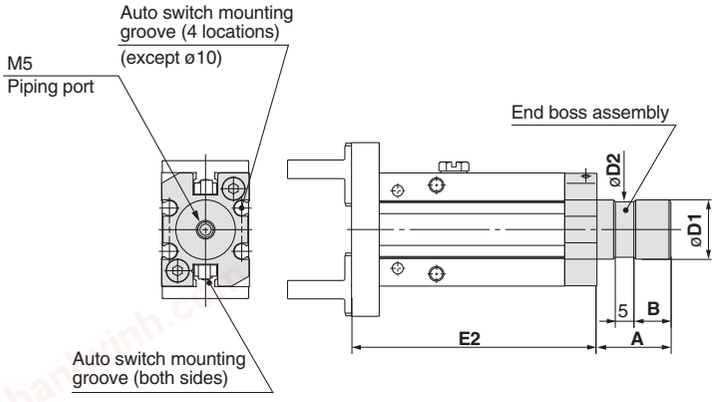

∗ Refer to the dimension table.
∗ When auto switches are used, side mounting with through holes is not possible.

Unit: mm

Model	A	B	D1	D2	E2
MHZL2-10□□	15	7	12f8 $^{-0.016}_{-0.043}$	11	62.8
MHZL2-16□□	20	10	16f8 $^{-0.016}_{-0.043}$	15	66.4
MHZL2-20□□	22	12	20f8 $^{-0.020}_{-0.053}$	19	81.7
MHZL2-25□□	25	15	25f8 $^{-0.020}_{-0.053}$	24	96.2

Other dimensions and specifications correspond to the standard type.

Weights

Unit: g

Model	End boss type (symbol)				
	E		W	K	M
	Double acting	Single acting			
MHZL2□-10□□	70	80	70	80	80
MHZL2□-16□□	170	180	170	180	180
MHZL2□-20□□	310	330	310	330	330
MHZL2□-25□□	535	580	535	580	580

chanhvinh.com

With Dust Cover
Series MHZJ2

How to Order

MHZJ2 – 16 D [ ] [ ] – M9PV [ ]

Number of fingers

2	2 fingers

Bore size

6	6mm
10	10mm
16	16mm
20	20mm
25	25mm

Action

D	Double acting
S	Single acting (normally open)
C	Single acting (normally closed)

Body option

∗ ø6 is only applicable with basic type.

Dust cover type

Nil	Chloroprene rubber (CR)
F	Fluoro rubber (FKM)
S	Silicon rubber (Si)

Auto switch type

Nil	Without auto switch (built-in magnet)

∗ Select an applicable auto switch model from the table below.

Number of auto switches

Nil	2 pcs.
S	1 pc.

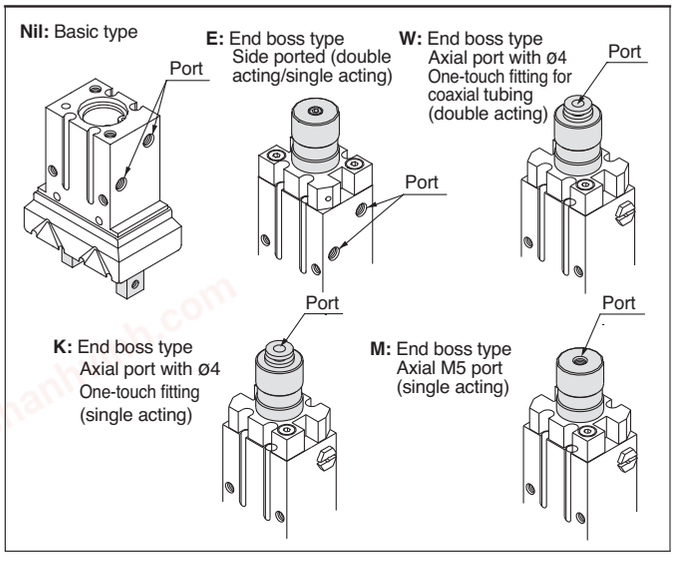

Applicable Auto Switches

Type	Special function	Electrical entry	Indicator light	Wiring (Output)	Load voltage			Auto switch model		Lead wire length (m) ∗				Applicable model					Pre-wired connector	Applicable load	
								Electrical entry direction		0.5 (Nil)	1 (M)	3 (L)	5 (Z)	ø6	ø10	ø16	ø20	ø25			
					DC		AC	Perpendicular	In-line												
Solid state auto switch	—	Grommet	Yes	3-wire (NPN)	24 V	5 V, 12 V	—	M9NV	M9N	●	●	●	○	●	●	●	●	●	○	IC circuit	Relay, PLC
								F8N	—	●	—	●	○	●	—	●	●	●	—		
				3-wire (PNP)				M9PV	M9P	●	●	●	○	●	●	●	●	●	○		
								F8P	—	●	—	●	○	●	—	●	●	●	—		
				2-wire		12 V		M9BV	M9B	●	●	●	○	●	●	●	●	●	○	—	
								F8B	—	●	—	●	○	●	—	●	●	●	—		
	Diagnosis (2-colour indicator)			3-wire (NPN)		5 V, 12 V		M9NWV	M9NW	●	●	●	○	●	●	●	●	●	○	IC circuit	
				3-wire (PNP)				M9PWV	M9PW	●	●	●	○	●	●	●	●	●	○		
				2-wire		12 V		M9BWV	M9BW	●	●	●	○	●	●	●	●	●	○	—	
	Water resistant (2-colour indicator)			3-wire (NPN)		5 V, 12 V		M9NAV**	M9NA**	○	○	●	○	●	●	●	●	●	○	IC circuit	
				3-wire (PNP)				M9PAV**	M9PA**	○	○	●	○	●	●	●	●	●	○		
				2-wire		12 V		M9BAV**	M9BA**	○	○	●	○	●	●	●	●	●	○	—	

∗∗ Water resistant type auto switches can be mounted on the above models, but in such case SMC cannot guarantee water resistance.

∗ Lead wire length symbols: 0.5 m····· Nil (Example) M9NW
1 m····· M (Example) M9NWM
3 m····· L (Example) M9NWL
5 m····· Z (Example) M9NWZ

∗ Solid state auto switches marked with ○ are produced upon receipt of order.

Note 1) When using the 2-colour indicator type, please make the setting so that the indicator is lit in red to ensure the detection at the proper position of the air gripper.
Note 2) When using a D-F8□ switch on sizes ø6, mount it at a distance of 10 mm or more from magnetic substances such as iron, etc.

chanhvinh.com



Specifications

Fluid			Air
Operating pressure	**Double acting**		ø6: 0.15 to 0.7MPa ø10: 0.2 to 0.7MPa ø16 to ø25: 0.1 to 0.7MPa
	Single acting	**Normally open**	ø6: 0.3 to 0.7MPa ø10: 0.35 to 0.7MPa ø16 to ø25: 0.25 to 0.7MPa
		Normally closed	
Ambient and fluid temperature			–10 to 60°C
Repeatability			±0.01mm
Maximum operating frequency			180c.p.m.
Lubrication			Non-lube
Action			Double acting, Single acting
Auto switch (option) Note)			Solid state switch (3 wire, 2 wire)

Symbols:

Double acting type

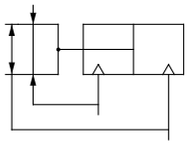

Single acting type, normally open

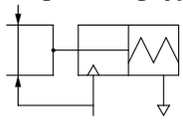

Single acting type, normally closed

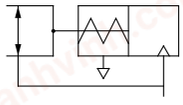

Models

Action		Model	Bore size (mm)	Gripping force Note 1)		Opening/ Closing stroke (both sides) mm	Note 2) Weight g
				Gripping force per finger Effective value N			
				External gripping force	Internal gripping force		
Double acting		**MHZJ2- 6D**	6	3.3	6.1	4	28
		MHZJ2-10D	10	9.8	17	4	60
		MHZJ2-16D	16	30	40	6	130
		MHZJ2-20D	20	42	66	10	250
		MHZJ2-25D	25	65	104	14	460
Single acting	Normally open	**MHZJ2- 6S**	6	1.9	—	4	28
		MHZJ2-10S	10	6.3		4	60
		MHZJ2-16S	16	24		6	130
		MHZJ2-20S	20	28		10	255
		MHZJ2-25S	25	45		14	264
	Normally closed	**MHZJ2- 6C**	6	—	3.7	4	28
		MHZJ2-10C	10		12	4	60
		MHZJ2-16C	16		31	6	130
		MHZJ2-20C	20		56	10	255
		MHZJ2-25C	25		83	14	460

Note 1) Values based on pressure of 0.5MPa, gripping point L = 20mm, at center of stroke.
Note 2) Values excluding weight of auto switch.

Options

● Body options/End boss type

Symbol	Piping port position	Type of piping port				Applicable model	
		MHZJ2-10	**MHZJ2-16**	**MHZJ2-20**	**MHZJ2-25**	Double acting	Single acting
Nil	Basic type	M3 x 0.5	M5 x 0.8			●	●
E	Axial port	M3 x 0.5	M5 x 0.8			●	●
W	Axial port	With ø4 One-touch fitting for coaxial tube				●	—
K	Axial port	With ø4 One-touch fitting				—	●
M	Axial port	M5 x 0.8				—	●

∗ For detailed body option specifications, refer to option specifications on pages 5-53 and 5-54

chanhvinh.com

Construction/MHZJ2-6□

Double acting/with fingers open

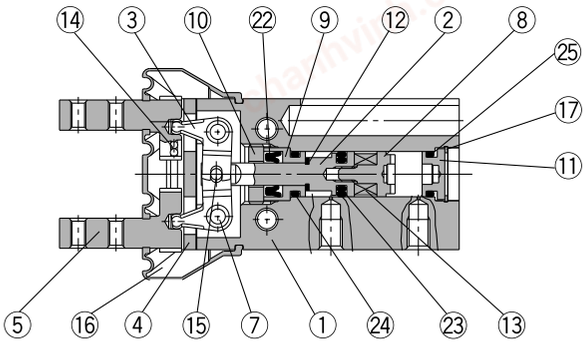

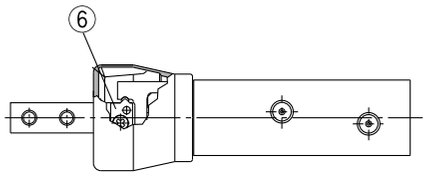

Single acting/normally open

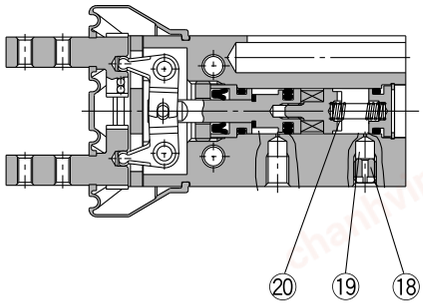

Single acting/normally closed

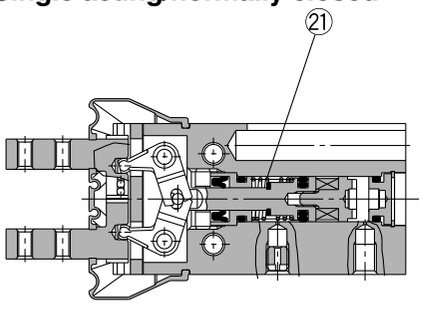

Double acting/with fingers closed

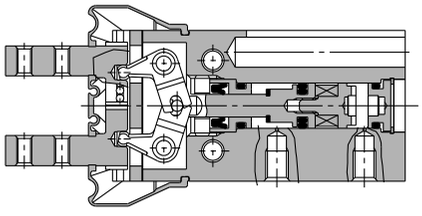

Parts list

No.	Description	Material	Note
1	**Body**	Aluminum alloy	Hard anodized
2	**Piston**	Stainless steel	
3	**Lever**	Stainless steel	Heat treated
4	**Guide**	Stainless steel	Heat treated
5	**Finger**	Stainless steel	Heat treated
6	**Roller stopper**	Stainless steel	
7	**Lever shaft**	Stainless steel	Nitrided
8	**Magnet holder**	Stainless steel	
9	**Holder**	Brass	Electroless nickel plated
10	**Holder lock**	Stainless steel	
11	**Cap**	Aluminum alloy	Clear anodized
12	**Bumper**	Urethane rubber	
13	**Magnet**	Rare earth magnet	Nickel plated
14	**Steel balls**	High carbon chromium bearing steel	
15	**Needle roller**	High carbon chromium bearing steel	
16	**Dust cover**	CR	Chloroprene rubber
		FKM	Fluoro rubber
		Si	Silicon rubber
17	**C type snap ring**	Carbon steel	Nickel plated
18	**Exhaust plug**	Brass	Electroless nickel plated
19	**Exhaust filter**	Polyvinyl formal	
20	**N.O. spring**	Stainless steel spring wire	
21	**N.C. spring**	Stainless steel spring wire	
22	**Rod seal**	NBR	
23	**Piston seal**	NBR	
24	**Gasket**	NBR	
25	**Gasket**	NBR	

Replacement parts: Seal kits

Seal kit no.	Description
MHZJ6-PS	Kit includes items 22, 23, 24 and 25 from the table on the left.

∗ Seal kits consist of items 22, 23, 24 and 25 contained in one kit, and can be ordered using the seal kit number.

Note) Contact SMC when replacing seals.

Replacement parts: Dust covers

Material	Part no.
CR	MHZJ2-J6
FKM	MHZJ2-J6F
Si	MHZJ2-J6S

chanhvinh.com

Construction/MHZJ2-10□ to 25□

Double acting/with fingers open

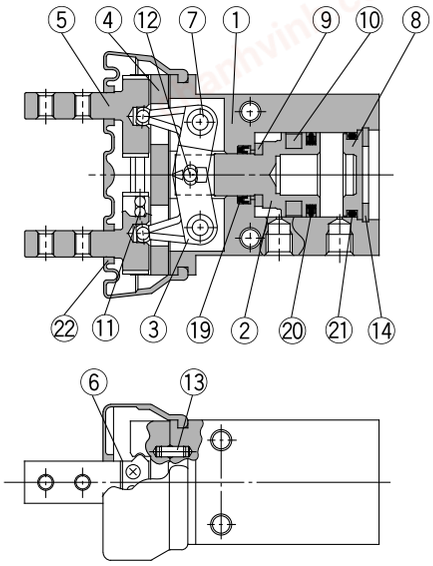

Single acting/normally open

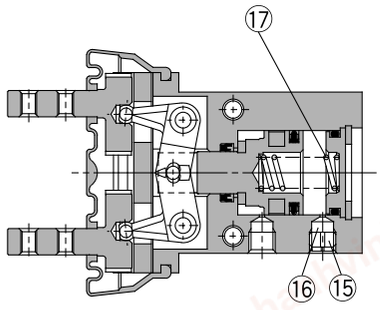

Single acting/normally closed

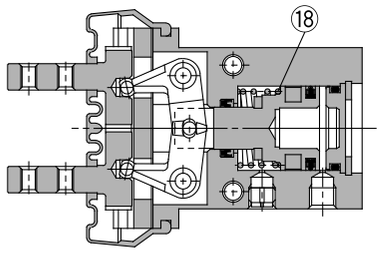

Double acting/with fingers closed

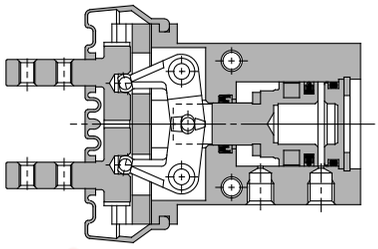

Parts list

No.	Description	Material	Note
1	**Body**	Aluminum alloy	Hard anodized
2	**Piston**	ø10, ø16: Stainless steel ø20, ø25: Aluminum alloy	ø20, ø25: Hard anodized
3	**Lever**	Stainless steel	Heat treated
4	**Guide**	Stainless steel	Heat treated
5	**Finger**	Stainless steel	Heat treated
6	**Roller stopper**	Stainless steel	
7	**Lever shaft**	Stainless steel	Nitrided
8	**Cap**	Aluminum alloy	Hard anodized
9	**Bumper**	Urethane rubber	
10	**Rubber magnet**	Synthetic rubber	
11	**Steel balls**	High carbon chromium bearing steel	
12	**Needle roller**	High carbon chromium bearing steel	
13	**Parallel pin**	Stainless steel	
14	**C type snap ring**	Carbon steel	Nickel plated
15	**Exhaust plug A**	Brass	Electroless nickel plated
16	**Exhaust filter A**	Polyvinyl formal	
17	**N.O. spring**	Stainless steel spring wire	
18	**N.C. spring**	Stainless steel spring wire	
19	**Rod seal**	NBR	
20	**Piston seal**	NBR	
21	**Gasket**	NBR	
22	**Dust cover**	CR	Chloroprene rubber
		FKM	Fluoro rubber
		Si	Silicon rubber

Replacement parts: Seal kits

Seal kit no.				Description
MHZJ2-10□	**MHZJ2-16□**	**MHZJ2-20□**	**MHZJ2-25□**	Kits include Note 2) items 19, 20 and 21 from the table on the left
MHZJ10-PS	MHZJ16-PS	MHZJ20-PS	MHZJ25-PS	

Note 2) Seal kits consist of items 19, 20 and 21 in one kit, and can be ordered using the seal kit number for each cylinder bore size.

Replacement parts: Dust covers

Material	Part no.			
	MHZJ2-10□	**MHZJ2-16□**	**MHZJ2-20□**	**MHZJ2-25□**
CR	MHZJ2-J10	MHZJ2-J16	MHZJ2-J20	MHZJ2-J25
FKM	MHZJ2-J10F	MHZJ2-J16F	MHZJ2-J20F	MHZJ2-J25F
Si	MHZJ2-J10S	MHZJ2-J16S	MHZJ2-J20S	MHZJ2-J25S

chanhvinh.com

Dimensions

MHZJ2-6□
Double acting/Single acting
Basic type

Scale: 100%

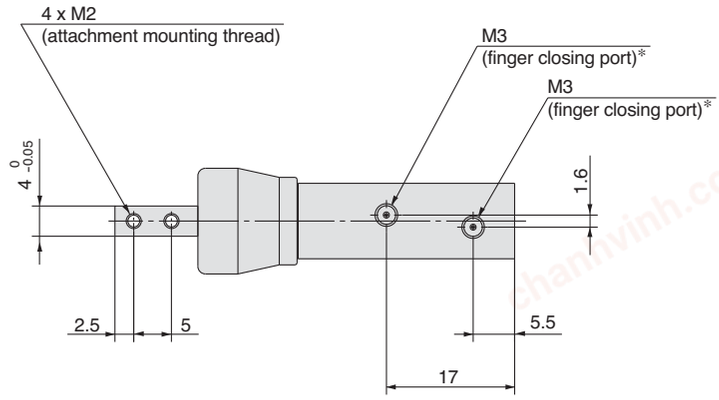

* For single action, the port on one side is a breathing hole.

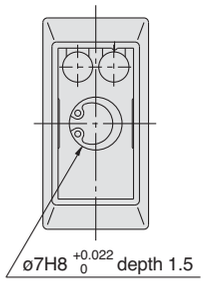

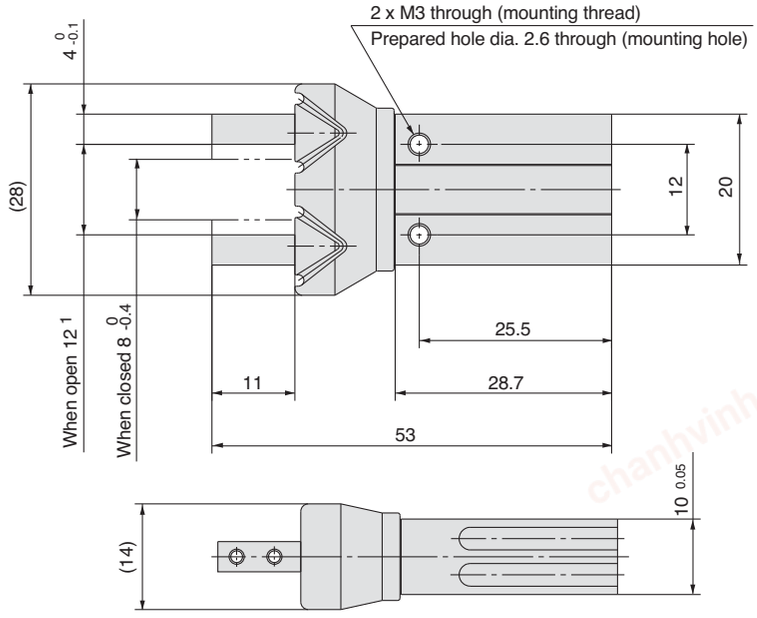

Auto switch mounting groove dimensions

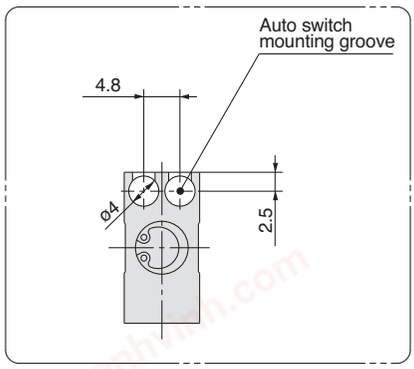

chanhvinh.com

MHZJ2-10□
Double acting/Single acting
Basic type

Scale: 90%

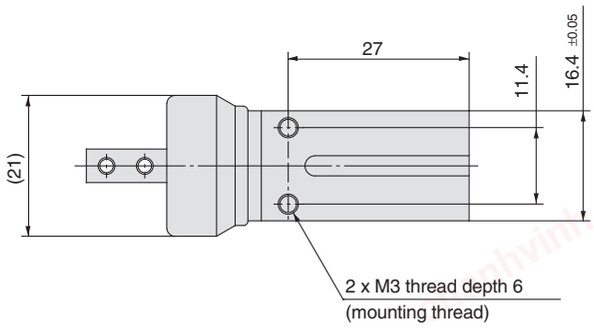

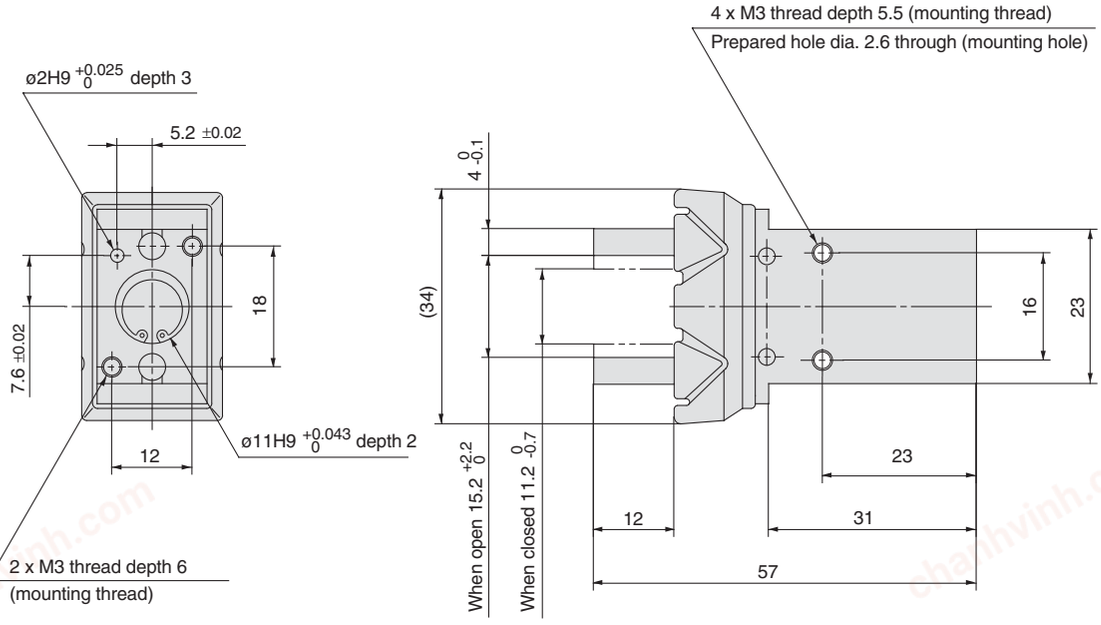

Auto switch mounting groove dimensions

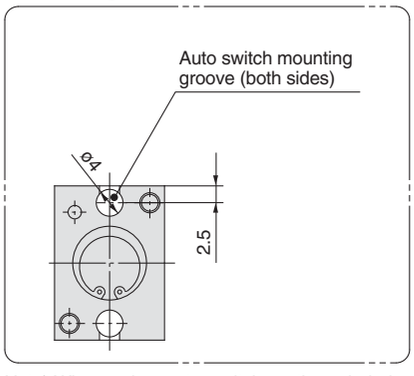

Note) When using auto switches, through hole mounting is not possible.

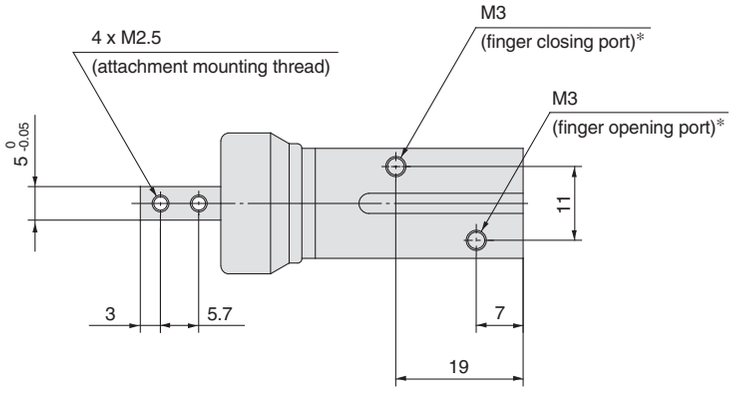

* For single action, the port on one side is a breathing hole.

chanhvinh.com

Dimensions

MHZJ2-16□
Double acting/Single acting
Basic type

Scale: 60%

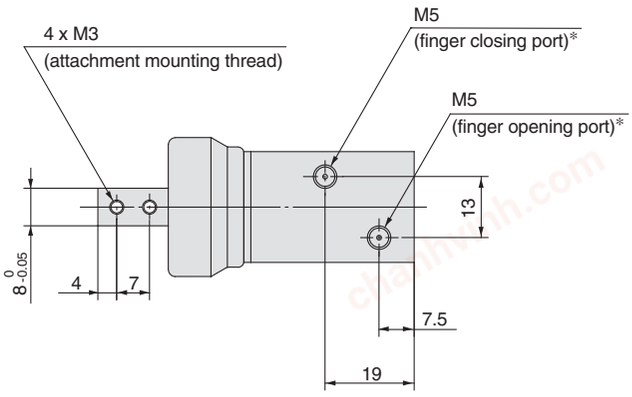

* For single action, the port on one side is a breathing hole.

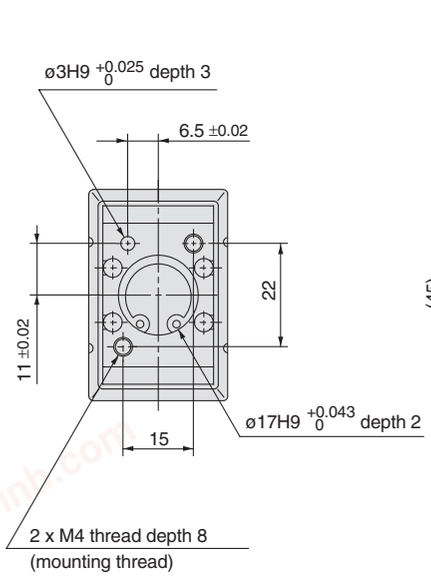

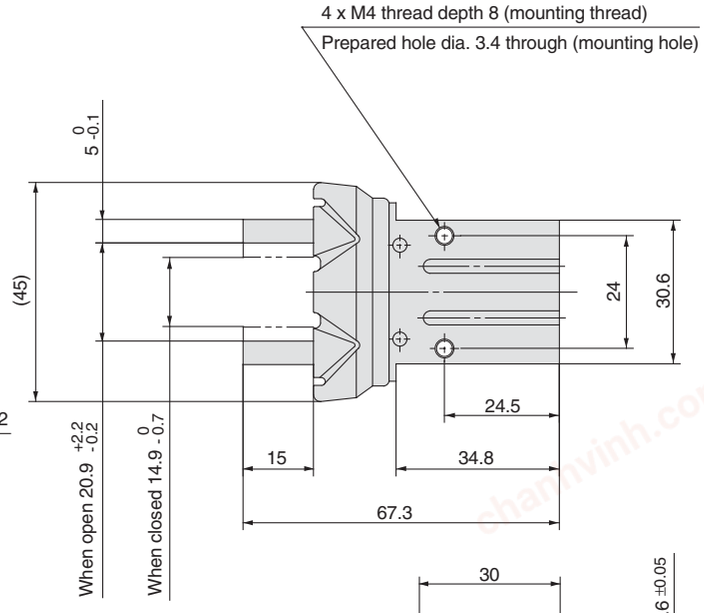

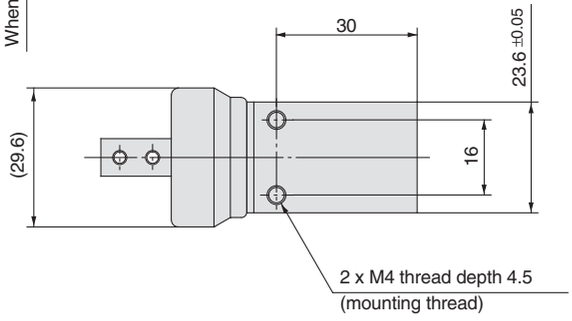

Auto switch mounting groove dimensions

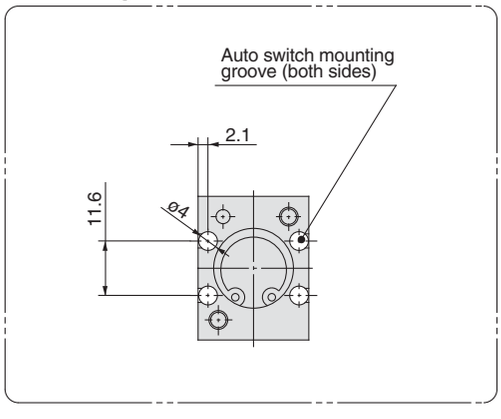

chanhvinh.com

MHZJ2-20□
Double acting/Single acting
Basic type

Scale: 60%

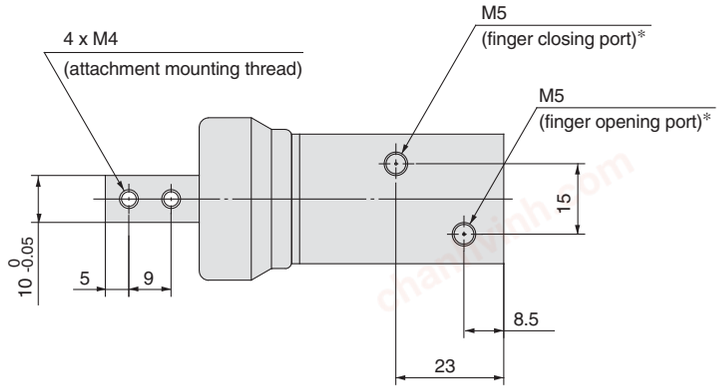

* For single action, the port on one side is a breathing hole.

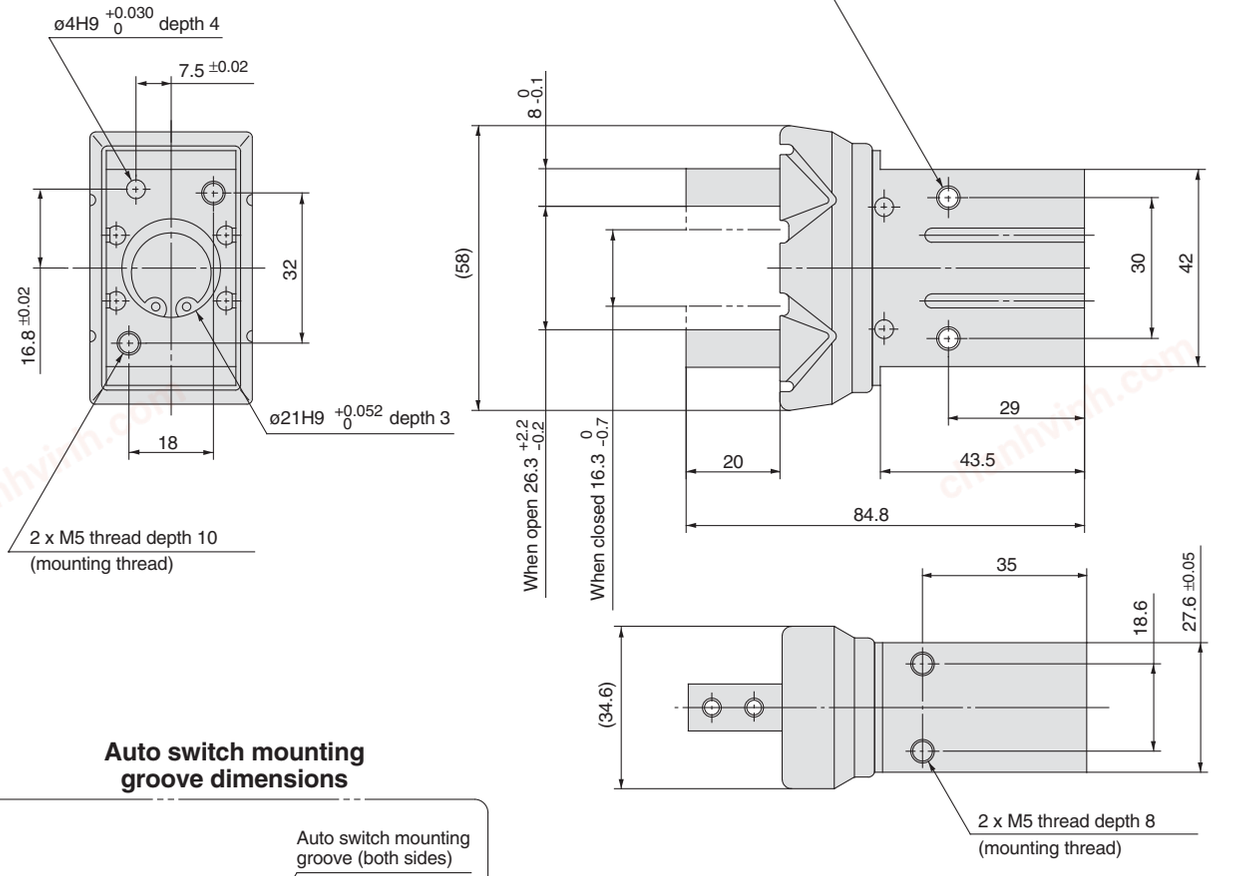

Auto switch mounting groove dimensions

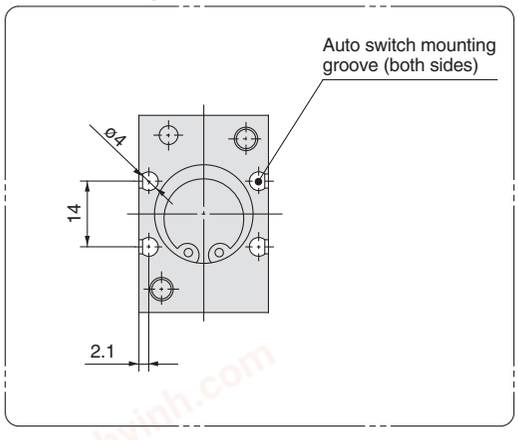

chanhvinh.com

Dimensions

MHZJ2-25□
Double acting/Single acting
Basic type

Scale: 50%

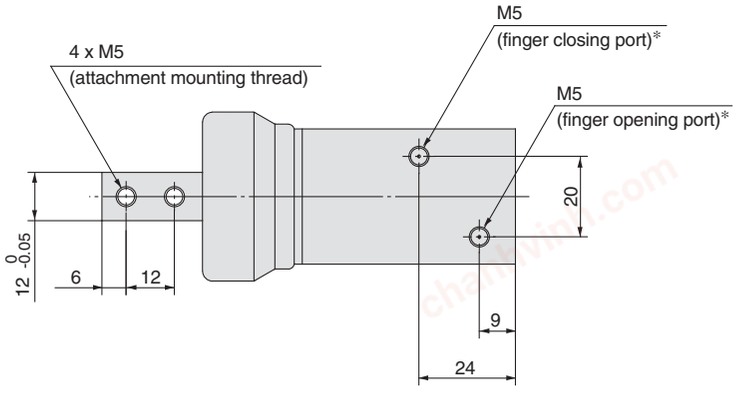

* For single action, the port on one side is a breathing hole.

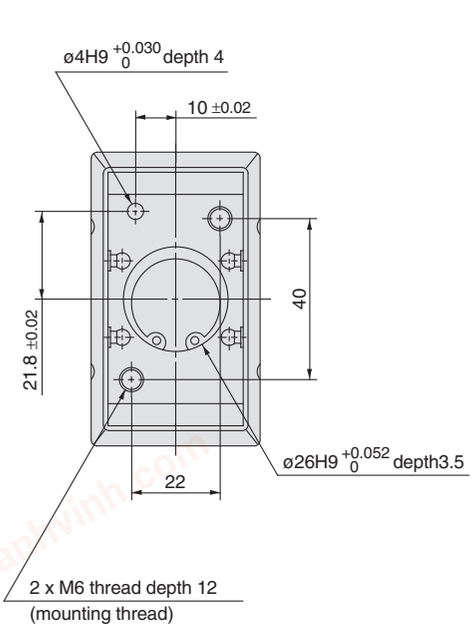

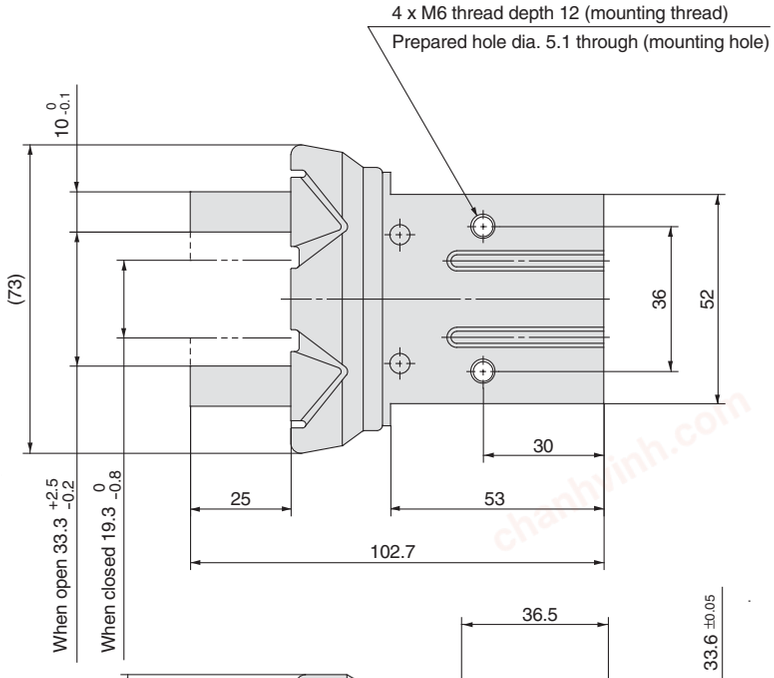

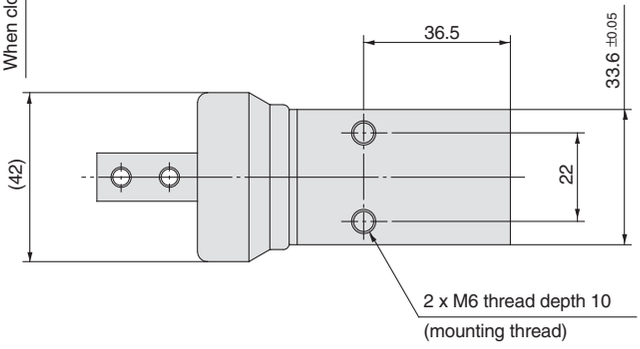

Auto switch mounting groove dimensions

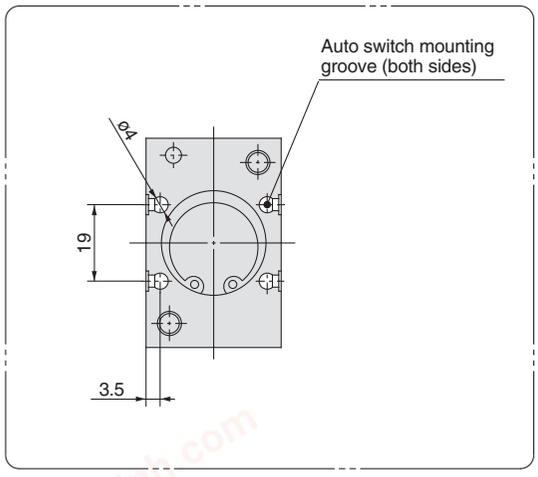

chanhvinh.com

With Dust Cover/*Series MHZJ2*
Body Options: End Boss Type

Applicable Models

Symbol	Piping port position	Type of piping port				Applicable model		
		MHZJ2-10	MHZJ2-16	MHZJ2-20	MHZJ2-25	Double acting	Single acting	
							Normally open	Normally closed
E	Side ported	M3	M5			●	●	●
W	Axial port	With ø4 One-touch fitting for coaxial tube				●	—	—
K		With ø4 One-touch fitting				—	●	●
M		M5 x 0.8				—	●	●

Side Ported [E]

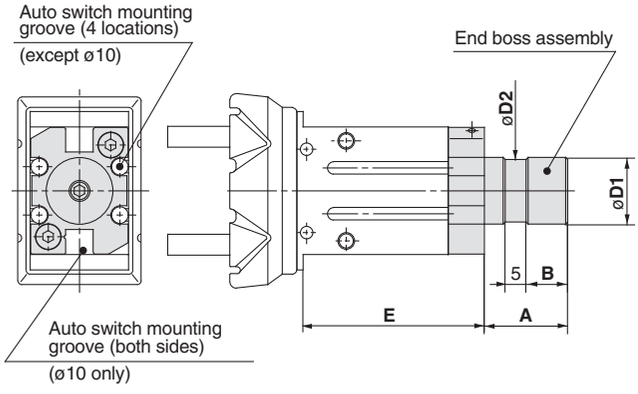

Unit: mm

Model	A	B	D1	D2	E
MHZJ2-10□□	15	7	12f8 $^{-0.016}_{-0.043}$	11	40
MHZJ2-16□□	20	10	16f8 $^{-0.016}_{-0.043}$	15	43.5
MHZJ2-20□□	22	12	20f8 $^{-0.020}_{-0.053}$	19	51.7
MHZJ2-25□□	25	15	25f8 $^{-0.020}_{-0.053}$	24	61.3

Other dimensions and specifications correspond to the standard type.

∗ Refer to the dimension table.
∗ When auto switches are used on ø10, side mounting with through holes is not possible.

Axial Port (One-touch Fitting for Coaxial Tubing) [W]

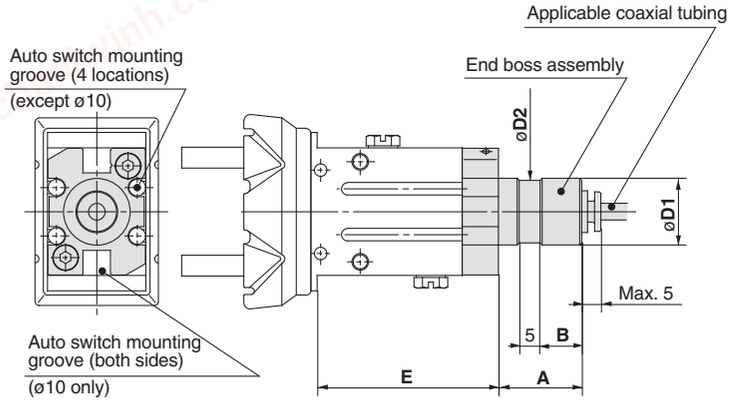

Unit: mm

Model	A	B	D1	D2	E
MHZJ2-10□□	15	7	12f8 $^{-0.016}_{-0.043}$	11	40
MHZJ2-16□□	20	10	16f8 $^{-0.016}_{-0.043}$	15	43.5
MHZJ2-20□□	22	12	20f8 $^{-0.020}_{-0.053}$	19	51.7
MHZJ2-25□□	25	15	25f8 $^{-0.020}_{-0.053}$	24	61.3

Other dimensions and specifications correspond to the standard type.

∗Refer to the dimension table.
∗When auto switches are used on ø10, side mounting with through holes is not possible.

Reference symbol

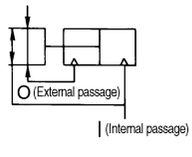

Applicable coaxial tubing

Specification \ Model	TW04B-20
Outside diameter	4mm
Max. operating pressure	0.6MPa
Min. bending radius	10mm
Operating temperature	–20 to 60°C
Material	Nylon 12

Changing from Coaxial to Single Tubing

Changing to single tubing is possible by using a branch "Y" or branch tee fitting.
In this case particularly, single tube fittings and tubing for ø3.2 will be necessary.

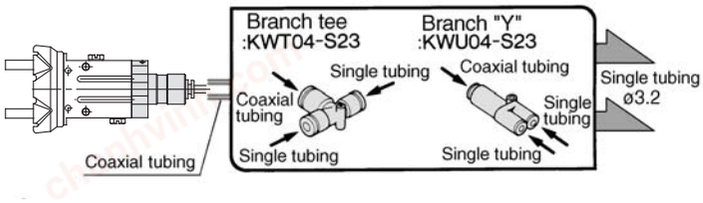

Branch tee, Different diameter tee, Branch "Y", Male run tee

Refer to catalogue CAT.E004-A "Coaxial Air Tubing System" regarding coaxial tubing.

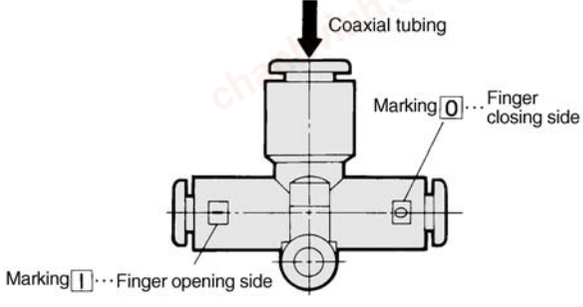

chanhvinh.com

With Dust Cover/*Series MHZJ2*
Body Options: End Boss Type

Axial Port (with One-touch Fitting) [K]

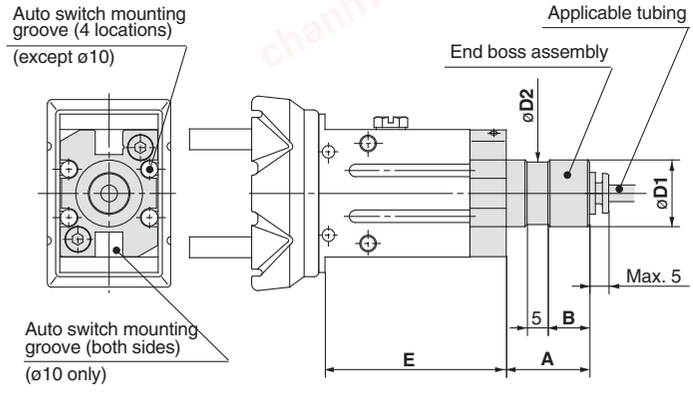

∗ Refer to the dimension table.
∗ When auto switches are used on ø10, side mounting with through holes is not possible.

Unit: mm

Model	A	B	D1	D2	E
MHZJ2-10□□	15	7	12f8 $^{-0.016}_{-0.043}$	11	40
MHZJ2-16□□	20	10	16f8 $^{-0.016}_{-0.043}$	15	43.5
MHZJ2-20□□	22	12	20f8 $^{-0.020}_{-0.053}$	19	51.7
MHZJ2-25□□	25	15	25f8 $^{-0.020}_{-0.053}$	24	61.3

Other dimensions and specifications correspond to the standard type.

Applicable tubing

Description/Model / Specification	Nylon tubing	Soft nylon tubing	Polyurethane tubing	Polyurethane coiled tubing
	T0425	TS0425	TU0425	TCU0425B-1
Outside diameter mm	4	4	4	4
Max. operating pressure MPa	1.0	0.8	0.5	0.5
Min. bending radius mm	13	12	10	—
Operating temperature °C	–20 to 60	–20 to 60	–20 to 60	–20 to 60
Material	Nylon 12	Nylon 12	Polyurethane	Polyurethane

Refer to catalog CAT. E501-B "Air Fittings and Tubing" regarding One-touch fittings and tubing.

Axial Port (M5 Port) [M]

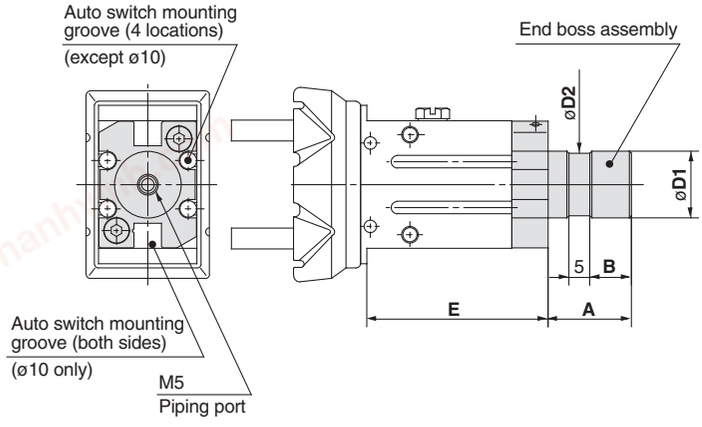

∗ Refer to the dimension table.
∗ When auto switches are used on ø10, side mounting with through holes is not possible.

Unit: mm

Model	A	B	D1	D2	E
MHZJ2-10□□	15	7	12f8 $^{-0.016}_{-0.043}$	11	40
MHZJ2-16□□	20	10	16f8 $^{-0.016}_{-0.043}$	15	43.5
MHZJ2-20□□	22	12	20f8 $^{-0.020}_{-0.053}$	19	51.7
MHZJ2-25□□	25	15	25f8 $^{-0.020}_{-0.053}$	24	61.3

Other dimensions and specifications correspond to the standard type.

Weights

Unit: g

Model	End boss type (symbol)			
	E	W	K	M
MHZJ2-10□□	70	70	70	70
MHZJ2-16□□	165	165	165	165
MHZJ2-20□□	290	290	290	290
MHZJ2-25□□	525	525	525	525

chanhvinh.com

Series MHZ2/MHZ□2
Auto Switch Installation Examples and Mounting Position

Various auto switch applications are possible through different combinations of auto switch quantities and detecting positions.

1) Detection when Gripping Exterior of Workpiece

Detection example	1. Confirmation of fingers in reset position	2. Confirmation of workpiece held	3. Confirmation of workpiece released
Position to be detected	Position of fingers fully opened 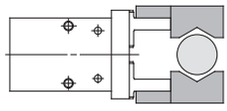	Position when gripping workpiece 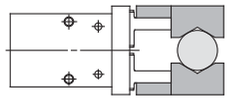	Position of fingers fully closed 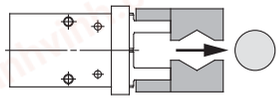
Operation of auto switch	Auto switch turned on when fingers return. (Light ON)	Auto switch turned on when gripping a workpiece. (Light ON)	When a workpiece is not held (Abnormal operation): Auto switch to turn ON (Light ON)
Detection combinations: One auto switch ∗One position, any of ①, ②, and ③ can be detected.	●	●	●
Detection combinations: Two auto switches ∗Two positions of ①, ②, and ③ can be detected. Pattern A	●	●	—
Pattern B	—	●	●
Pattern C	●	—	●
How to determine auto switch installation position	Step 1) Fully open the fingers. 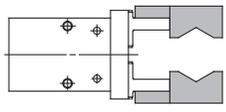	Step 1) Position fingers for gripping a workpiece. 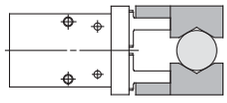	Step 1) Fully close the fingers. 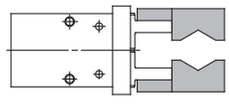
At no pressure or low pressure, connect the auto switch to a power supply, and follow the directions.	Step 2) Insert the auto switch into the switch installation groove in the direction shown in the following drawing.0 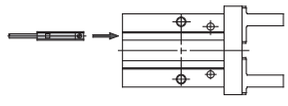		
	Step 3) Slide the auto switch in the direction of the arrow until the indicator light illuminates. 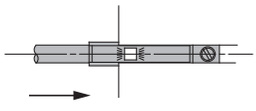 Step 4) Slide the auto switch further in the direction of the arrow until the indicator light goes out. 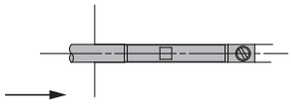 Step 5) Move the auto switch in the opposite direction and fasten it at a position 0.3 to 0.5 mm beyond the position where the indicator light illuminates. Position where light turns ON 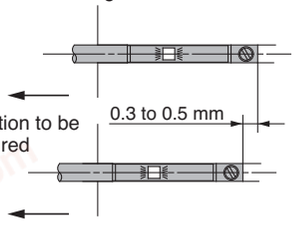	Step 3) Slide the auto switch in the direction of the arrow until the light illuminates and fasten it at a position 0.3 to 0.5 mm in the direction of the arrow beyond the position where the indicator light illuminates. 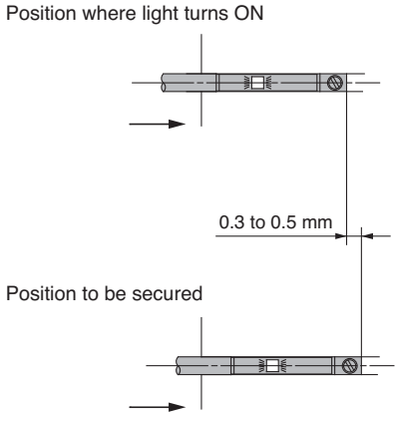

Note 1) It is recommended that gripping of a workpiece be performed close to the center of the finger stroke.
Note 2) When holding a workpiece close at the end of open/close stroke of fingers, detecting performance of the combinations listed in the above table may be limited, depending on the hysteresis of an auto switch, etc.

chanhvinh.com

Various auto switch applications are possible through different combinations of auto switch quantities and detecting positions.

2) Detection when Gripping Interior of Workpiece

Detection example	1. Confirmation of fingers in reset position	2. Confirmation of workpiece held	3. Confirmation of workpiece released
Position to be detected	Position of fingers fully closed 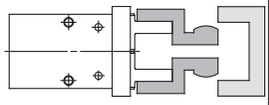	Position when gripping workpiece 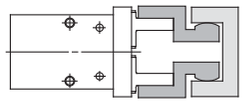	Position of fingers fully opened 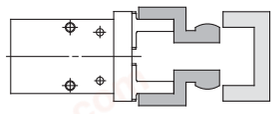
Operation of auto switch	Auto switch turned ON when fingers return. (Light ON)	Auto switch turned ON when gripping a workpiece. (Light ON)	When a workpiece is not held (Abnormal operation): Auto switch to turn ON (Light ON)
Detection combinations: One auto switch *One position, any of ①, ②, and ③ can be detected.	●	●	●
Detection combinations: Two auto switches *Two positions of ①, ②, and ③ can be detected. Pattern A	●	●	–
Pattern B	–	●	●
Pattern C	●	–	●
How to determine auto switch installation position	Step 1) Fully close the fingers. 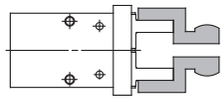	Step 1) Position fingers for gripping a workpiece. 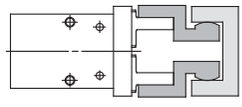	Step 1) Fully open the fingers. 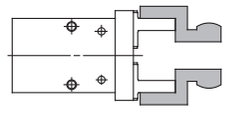
At no pressure or low pressure, connect the auto switch to a power supply, and follow the directions.	Step 2) Insert the auto switch into the switch installation groove in the direction shown in the following drawing. 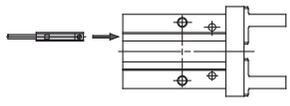		
	Step 3) Move the auto switch in the direction of the arrow and fasten it at a position 0.3 to 0.5 mm beyond the position where the indicator light illuminates. 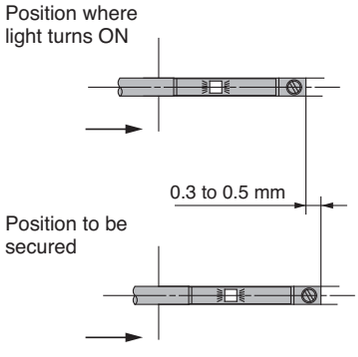	Step 3) Slide the auto switch in the direction of the arrow until the indicator light illuminates. 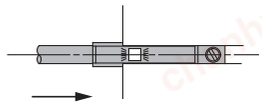 Step 4) Slide the auto switch further in the direction of the arrow until the indicator light goes out. 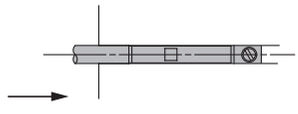 Step 5) Move the auto switch in the opposite direction 0.3 to 0.5 mm in the direction indicated by the arrow from its location when the indicator light comes on again. 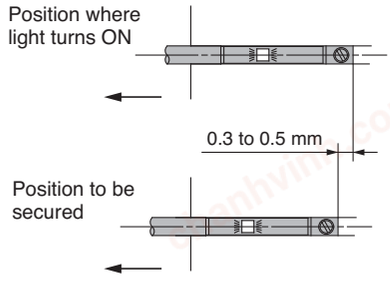	

Note 1) It is recommended that gripping of a workpiece be performed close to the center of the finger stroke.
Note 2) When holding a workpiece close at the end of open/close stroke of fingers, detecting performance of the combinations listed in the above table may be limited, depending on the hysteresis of an auto switch, etc.

chanhvinh.com

Auto Switch Hysteresis

Auto switches have hysteresis similar to micro switches.
Use the table below as a guide when adjusting auto switch positions, etc.

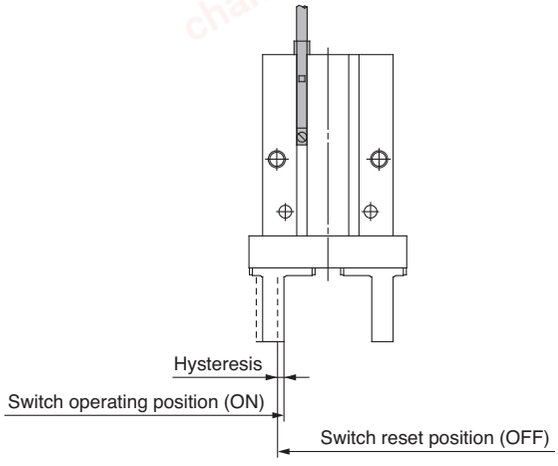

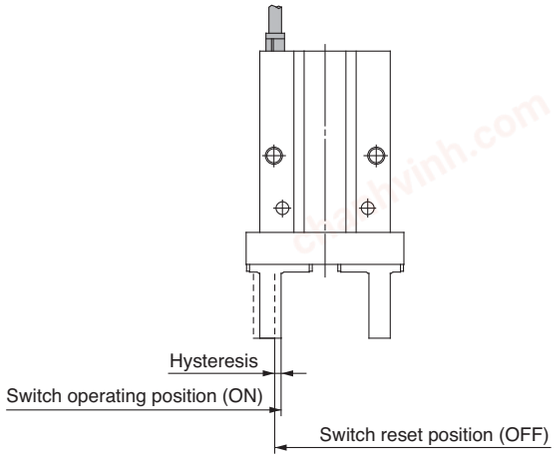

Hysteresis

Auto switch model / Air gripper model	D-Y59A/Y59B D-Y69A/Y69B D-Y7P(V) D-Y7□W(V)	D-F8□	D-M9□(V) D-M9□W(V) D-M9□A(V)
MHZ2-6□	No setting	0.5	0.5
MHZ2-10□, MHZL2-10□	0.5	0.5 Note)	0.5 Note)
MHZ2-16□, MHZL2-16□	0.5	0.5	0.5
MHZ2-20□, MHZL2-20□	0.5	0.5	0.8
MHZ2-25□, MHZL2-25□	0.5	0.5	0.5
MHZ2-32□	0.5	0.5	0.7
MHZ2-40□	0.5	0.5	0.9
MHZJ2-6□	No setting	0.5	0.5
MHZJ2-10□		0.5	0.5
MHZJ2-16□		0.5	0.5
MHZJ2-20□		0.5	0.8
MHZJ2-25□		0.5	0.5

Note) When mounting D-M9□(V), M9□W(V) and M9□A(V) on MHZ2-10□ and MHZL2-10, mounting brackets (BMG2-012) are required.

chanhvinh.com

Auto Switch Mounting

Applicable models:
MHZ2-6
Series MHZJ2
Round groove of Series MHZ2
Round groove of Series MHZL2

To set the auto switch, insert the auto switch into the auto switch installation groove of the gripper from the direction indicated in the following drawing. After setting the position, tighten the attached auto switch mounting screw with a flat head watchmaker's screwdriver.

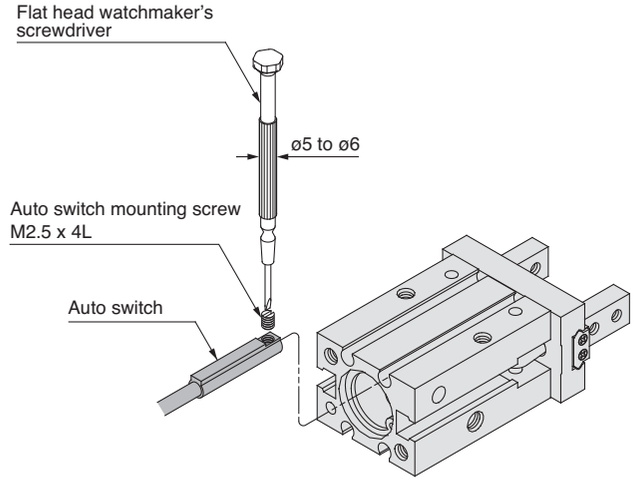

Note) Use a watchmaker's screwdriver with a grip diameter of 5 to 6 mm to tighten the auto switch mounting screw.
The tightening torque should be 0.05 to 0.15 N·m.

Applicable models:
Square groove on the side of Series MHZ2
Square groove on the side of Series MHZL2

(1) To set the auto switch, insert the auto switch into the installation groove of the cylinder as shown below and set it roughly.
(2) Insert the auto switch into the auto switch bracket installation groove.
(3) After confirming the detecting position, tighten the set screws (M2.5) attached to the auto switch and set it.
(4) Be sure to change the detecting position in the state of (2).

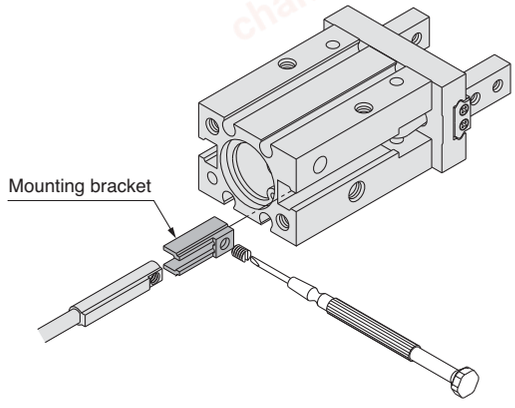

Auto Switch Mounting Bracket: Part No.

Auto switch part no.	Auto switch mounting bracket part no.
D-M9□(V) **D-M9□W(V)** **D-F8□** **D-M9□A(V)**	BMG2-012

Note) Use a watchmaker's screwdriver with a grip diameter of 5 to 6 mm to tighten the set screws (M2.5).
The tightening torque should be 0.05 to 0.1 N·m.
As a guide, it should be turned about 90° beyond the point at which tightening can be felt.
Note) D-F8□ cannot be mounted on MHZ2-10□, MHZJ2-10□ and MHZL2-10□

[Handling of Mounting Brackets: Precautions]
When auto switch is set on the mounting side as shown below, allow at least 2 mm run off space on mounting plate since the auto switch is protruded from the gripper edge.

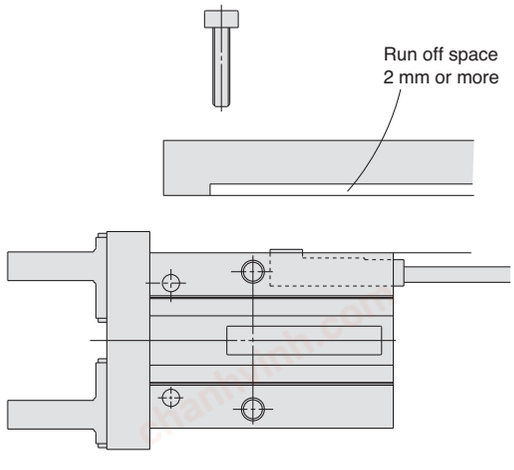

chanhvinh.com

Protrusion of Auto Switch from Edge of Body

The amount of auto switch protrusion from the body's end surface is as shown in the table below.
Use this as a standard when mounting, etc.
D-F8□ has no protrusion from the body's end surface.
The end boss type has no protrusion either.

Standard Body

Lead wire type			In-line electrical entry type			Perpendicular electrial entry type		
Explanatory drawing			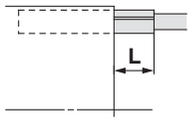		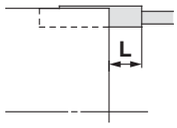	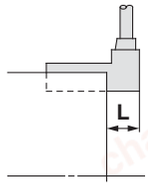		
Auto switch model			D-Y59□ D-Y7P D-Y7□W	D-M9□ D-M9□W	D-M9□A	D-Y69□ D-Y7PV D-Y7□WV	D-M9□V D-M9□WV	D-M9□AV
Finger position	Air gripper model							
Standard	MHZ2-6□	Open	No setting	11	13	No setting	9	11
		Close		13	15		11	13
	MHZ2-10□	Open	1	3.5 Note 3)	5.5 Note 3)	—	1.5 Note 3)	3.5 Note 3)
		Close	7.5	6.5 Note 3)	8.5 Note 3)	6.5	4.5 Note 3)	6.5 Note 3)
	MHZ2-16□	Open	—	1	3	—	—	—
		Close	6	4	6	5	2	4
	MHZ2-20□	Open	—	—	—	—	—	—
		Close	4	2	4	3	—	—
	MHZ2-25□	Open	—	—	—	—	—	—
		Close	1	—	—	—	—	—
	MHZ2-32□	Open	—	—	—	—	—	—
		Close	3	—	—	2	—	—
	MHZ2-40□	Open	—	—	—	—	—	—
		Close	2	—	—	1	—	—
With dust cover	MHZJ2-6□	Open	No setting	11	13	No setting	9	11
		Close		13	15		11	13
	MHZJ2-10□	Open		5	7		3	5
		Close		7	9		5	7
	MHZJ2-16□	Open		2	4		—	—
		Close		5	7		3	5
	MHZJ2-20□	Open		—	—		—	—
		Close		3	5		1	3
	MHZJ2-25□	Open		—	—		—	—
		Close		2	4		—	—
Long stroke / Double acting	MHZL2-10D	Open	0.5	1.5 Note 3)	3.5 Note 3)	—	—	—
		Close	8.5	8 Note 3)	10 Note 3)	7.5	6 Note 3)	8 Note 3)
	MHZL2-16D	Open	—	—	—	—	—	—
		Close	8	6	8	7	4	6
	MHZL2-20D	Open	—	—	—	—	—	—
		Close	7	5	7	6	3	5
	MHZL2-25D	Open	—	—	—	—	—	—
		Close	5.5	3.5	5.5	4.5	1.5	3.5
Long stroke / Single acting (Normally open)	MHZL2-10S	Open	—	—	—	—	—	—
		Close	—	—	—	—	—	—
	MHZL2-16S	Open	—	—	—	—	—	—
		Close	3	1	3	2	—	—
	MHZL2-20S	Open	—	—	—	—	—	—
		Close	1	—	—	—	—	—
	MHZL2-25S	Open	—	—	—	—	—	—
		Close	—	—	—	—	—	—
Long stroke / Single acting (Normally closed)	MHZL2-10C	Open	—	—	—	—	—	—
		Close	5.5	5 Note 3)	7 Note 3)	4.5	3 Note 3)	5 Note 3)
	MHZL2-16C	Open	—	—	—	—	—	—
		Close	5.5	3.5	5.5	4.5	1.5	3.5
	MHZL2-20C	Open	—	—	—	—	—	—
		Close	3.5	1.5	3.5	2.5	—	—
	MHZL2-25C	Open	—	—	—	—	—	—
		Close	1.5	—	—	0.5	—	—

Note 1) There is no protrusion if no values are entered in the table.
Note 2) The actual mounting position should be adjusted after confirming the auto switch operating conditions.
Note 3) When mounting D-M9□(V), M9□W(V) and M9□A(V) on MHZ2-10□ and MHZL2-10, mounting brackets (BMG2-012) are required.

chanhvinh.com

Series MHZ
Order Made Specifications

Order Made

Contact SMC for detailed dimensions, specifications and lead times.

1 Spring Assisted Type

Symbol -X7 X12

Compact Type/MHZA2-6, MHZAJ2-6

With dust cover **MHZAJ2 — 6 D □ —X12**

Standard type **MHZA 2 — 6 D □ □ —X12**

Bore size

Action

D	Double acting

Assist type

12	Opening direction assist

Body option

Nil	Basic type
E	End boss type Side ported

Finger position

Nil	Basic type
1	Side tapped mounting
2	Through holes in open/close direction
3	Flat type fingers

Specifications

Type	Spring assisted type
Bore size	6
Action	Double acting
Fluid	Air

Note) Dimensions are the same as the standard type.

With Dust Cover/MHZJ2

MHZJ2 — Bore size D □ —X 7

Action

D	Double acting

Assist type

7	Closing direction assist
12	Opening direction assist

Body option

Nil	Basic type
E	End boss type Side ported
W	End boss type One-touch fitting for coaxial tube

∗ Only the basic type is applicable for ø6.

Specifications

Type	Spring assisted type
Bore size	6, 10, 16, 20, 25
Action	Double acting
Fluid	Air

Note) Dimensions are the same as the standard type.

Standard Type/MHZ2

ø6 **MHZ2 — 6 D □ —X 7**

ø10 to ø40 **MHZ2 — Bore size D □ □ —X 7**

Action

D	Double acting

Finger position/option

Standard type

Nil	Basic type
1	Side tapped mounting
2	Through holes in open/close direction

Narrow type

N	Basic type
N1	Side tapped mounting
N2	Through holes in open/close direction

3	Flat type fingers

∗ Narrow type is not available for ø6, ø32 and ø40.

Assist type

7	Closing direction assist
12	Opening direction assist

Body option

Nil	Basic type
E	End boss type Side ported
W	End boss type One-touch fitting for coaxial tube

∗ Only the basic type is applicable for ø32 and ø40.

Specifications

Type	Spring assisted type
Bore size	6, 10, 16, 20, 25, 32, 40
Action	Double acting
Fluid	Air

Note) Dimensions of ø6 to ø25 are the same as the standard type.
Dimensions of ø32 and ø40 are the same as the standard single acting type.

Long Stroke/MHZL2

MHZL2 — Bore size D □ □ —X 7

Action

D	Double acting

Assist type

7	Closing direction assist
12	Opening direction assist

Finger position/option

Standard type

Nil	Basic type
1	Side tapped mounting
2	Through holes in open/close direction
3	Flat type fingers

Body option

Nil	Basic type
E	End boss type Side ported
W	End boss type One-touch fitting for coaxial tube

Specifications

Type	Spring assisted type
Bore size	10, 16, 20, 25
Action	Double acting
Fluid	Air

Dimensions are the same as the single acting type.

chanhvinh.com

Symbol

2 With Needle (with Variable Throttle) -X46

Installation of a variable throttle allows adjustment of the finger opening/closing speed.

MHZ2— Bore size D □ □ —X46

Action

D	Double acting

* Not available for ø6, ø32 and ø40.

Finger position/option

Standard type

Nil	Basic type
1	Side tapped mounting
2	Through holes in open/close direction

Narrow type

N	Basic type
N1	Side tapped mounting
N2	Through holes in open/close direction

3	Flat type fingers

Body option

Nil	Basic type
E	End boss type Side ported
W	End boss type One-touch fitting for coaxial tube

Specifications

Type	With needle
Bore size	10, 16, 20, 25
Action	Double acting
Fluid	Air

Dimensions

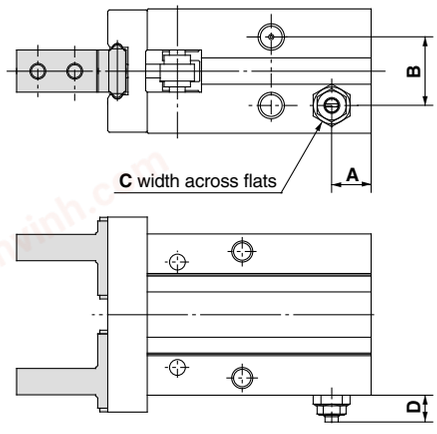

Model	A	B	C	D*
MHZ2-10D□□-X46	9	11	4.5	5.2
MHZ2-16D□□-X46	7.5	13	7	5.8
MHZ2-20D□□-X46	10	15	7	6
MHZ2-25D□□-X46	10.7	20	7	6.2

Dimensions other than the above are identical to the standard type; refer to pages 5-24 through 5-28.
* Reference values to establish criteria for needle adjustment.

Adjust so that the finger opening/closing speed will be no greater than necessary.
If the finger opening/closing speed is greater than necessary, impact forces acting on the fingers and other parts will increase. This can cause a loss of repeatability when gripping work pieces and have an adverse effect on the life of the unit.

Guide for internal needle adjustment

Model	Number of rotations from fully closed needle condition Note 1)
MHZ2-10D□□-X46	1/4 to 1/2
MHZ2-16D□□-X46	1/2 to 1
MHZ2-20D□□-X46	1 to 1 1/2
MHZ2-25D□□-X46	1 1/2 to 2

Note 1) The condition in which the needle is tightened gently until it stops.

chanhvinh.com

Symbol

3 MHQ2/MHQG2 Compatible Flat Finger Type -X51

The flat finger type can be selected depending on the intended application.

MHZ2— Bore size | D | | | —X51

Action

D	Double acting
S	Single acting (normally open)
C	Single acting (normally closed)

Finger position

Nil	MHQG2 compatible type
N	MHQ2 compatible type

* Not available for ø6, ø32 and ø40.

Body option

Nil	Basic type
E	End boss type Side ported
W	End boss type One-touch fitting for coaxial tube
K	End boss type One-touch fitting
M	End boss type with M5 port

Specifications

Type	Flat finger type
Bore size	10, 16, 20, 25
Action	Double acting, Single acting (normally open, normally closed)
Fluid	Air

Dimensions

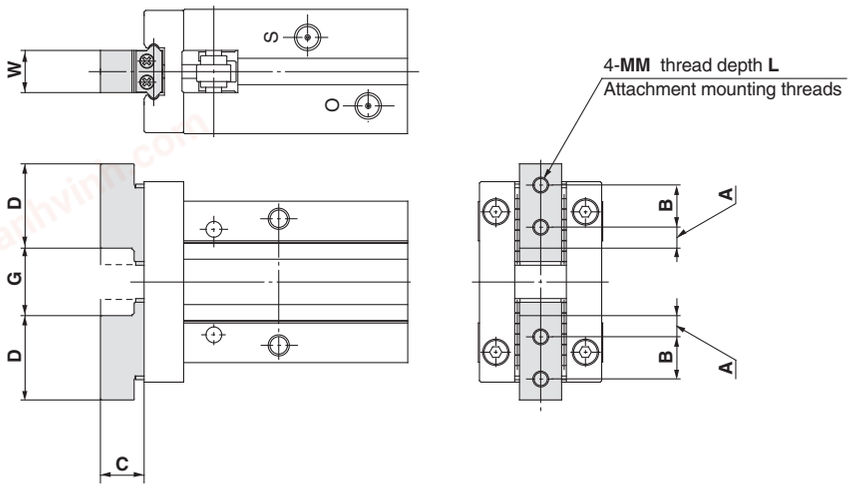

Unit: mm

Model		A	B	C	D	G Open	G Closed	MM	L	W
MHZ2-10□□□-X51	MHQG2 compatible	3	6	5.2	12	9.7 $^{+2.2}_{0}$	5.7 $^{0}_{-0.4}$	M2	3.6	5 $^{0}_{-0.05}$
	MHQ2 compatible	2	5	5.2	9	9.7 $^{+2.2}_{0}$	5.7 $^{0}_{-0.4}$	M2	3.6	5 $^{0}_{-0.05}$
MHZ2-16□□□-X51	MHQG2 compatible	4	8	8.3	16	12.6 $^{+2.2}_{0}$	6.6 $^{0}_{-0.4}$	M3	6	8 $^{0}_{-0.05}$
	MHQ2 compatible	2.5	7	8.3	12	12.6 $^{+2.2}_{0}$	6.6 $^{0}_{-0.4}$	M3	6	8 $^{0}_{-0.05}$
MHZ2-20□□□-X51	MHQG2 compatible	5	10	10.5	20.8	17.2 $^{+2.2}_{0}$	7.2 $^{0}_{-0.4}$	M4	8	10 $^{0}_{-0.05}$
	MHQ2 compatible	3.3	9	10.5	15.5	17.2 $^{+2.2}_{0}$	7.2 $^{0}_{-0.4}$	M4	8	10 $^{0}_{-0.05}$
MHZ2-25□□□-X51	MHQG2 compatible	6.5	12	13.1	25	22.8 $^{+2.5}_{0}$	8.8 $^{0}_{-0.4}$	M5	10	12 $^{0}_{-0.05}$
	MHQ2 compatible	3.5	12	13.1	19	22.8 $^{+2.5}_{0}$	8.8 $^{0}_{-0.4}$	M5	10	12 $^{0}_{-0.05}$

Dimensions other than the above are identical to the standard type; refer to pages 5-24 through 5-28

chanhvinh.com

chanhvinh.com

Series MHZ
Model Selection

Model Selection

Selection procedure

Step 1 Confirm gripping force → **Step 2** Confirm gripping point → **Step 3** Confirm external force on fingers

Step 1 Confirmation of gripping force

Confirmation of conditions → Calculation of required gripping force → Selection of model from gripping force graph

Example

Work piece weight: 0.1kg

Gripping method: External gripping

Model selection criteria with respect to work piece weight

- Although differences will exist depending upon factors such as shape and the coefficient of friction between the attachments and the work pieces, select a model which will provide a gripping force at least 10 to 20 times Note) greater than the work piece weight.

  Note) For further details, refer to the model selection illustration.
- Furthermore, in cases with high acceleration or impact, etc., it is necessary to allow an even greater margin of safety.

Example: When it is desired to set the gripping force at 20 times or more above the work piece weight.
Required gripping force = 0.1kg x 20 x 9.8m/s² (approx.) 19.6N or more

Gripping point distance: L = 30mm

Operating pressure: 0.4MPa

MHZ□2-16 External gripping

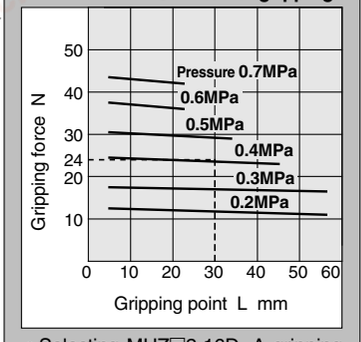

- Selecting MHZ□2-16D. A gripping force of 24N is obtained from the intersection point of gripping point distance L = 30mm and pressure of 0.4MPa.
- The gripping force is 24.5 times greater than the work piece weight, and therefore satisfies a gripping force setting value of 20 times or more.

Model selection illustration

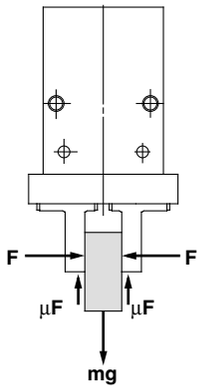

"Gripping force at least 10 to 20 times the work piece weight"
The "10 to 20 times or more of the work piece weight" recommended by SMC is calculated with a safety margin of a=4, which allows for impacts that occur during normal transportation, etc.

When μ = 0.2	When μ = 0.1
$F = \frac{mg}{2 \times 0.2} \times 4$	$F = \frac{mg}{2 \times 0.1} \times 4$
$= 10 \times mg$	$= 20 \times mg$
10 x work piece weight	20 x work piece weight

Note) Even in cases where the coefficient of friction is greater than μ= 0.2, for reasons of safety, select a gripping force which is at least 10 to 20 times greater than the work piece weight, as recommended by SMC.
It is necessary to allow a greater safety margin for high accelerations and strong impacts, etc.

When gripping a work piece as in the figure to the left, and with the following definitions,

F: Gripping force (N)

μ: Coefficient of friction between the attachments and the work piece

m: Work piece mass (kg)

g: Gravitational acceleration (= 9.8m/s²)

mg: Work piece weight (N)

the conditions under which the work piece will not drop are

$$\underline{2} \times \mu F > mg$$

Number of fingers

and therefore,

$$F > \frac{mg}{2 \times \mu}$$

With "a" representing the safety margin, F is determined by the following formula:

$$F = \frac{mg}{2 \times \mu} \times a$$

chanhvinh.com

Step 1 Effective gripping force: Series MHZ□2/Double acting/External gripping force

• Expressing the effective gripping force
The effective gripping force shown in the graphs to the right is expressed as F, which is the impellent force of one finger, when both fingers and attachments are in full contact with the work piece as shown in the figure below.

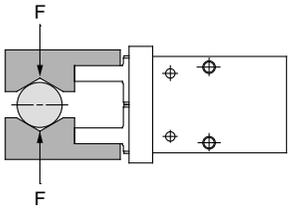

External gripping

MHZA2, MHZ2, MHZL2

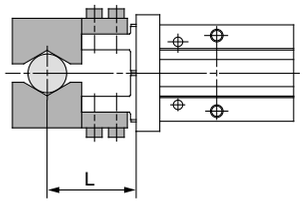

External gripping force

MHZ2-6D/MHZA2-6D

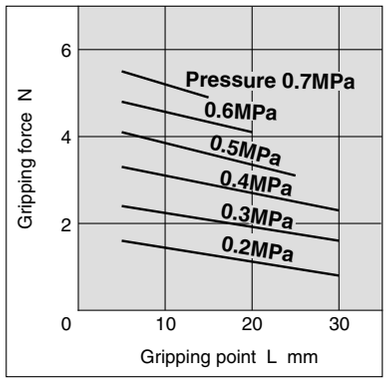

MHZ2-10D/MHZL2-10D

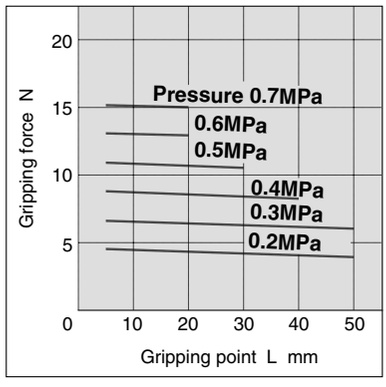

MHZ2-16D/MHZL2-16D

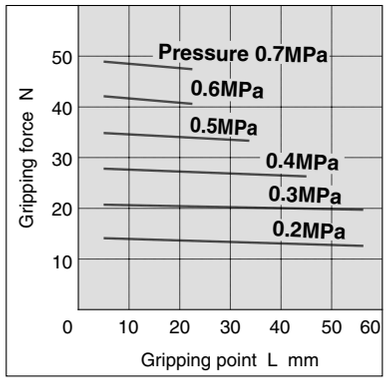

MHZ2-20D/MHZL2-20D

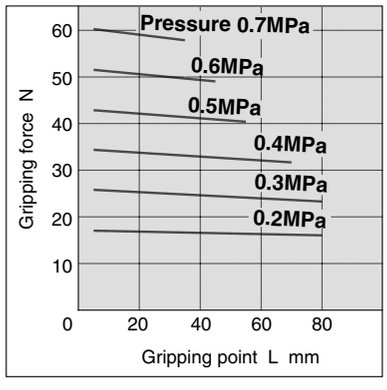

External gripping force

MHZ2-25D/MHZL2-25D

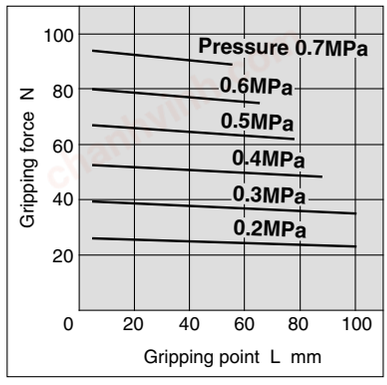

MHZ2-32D

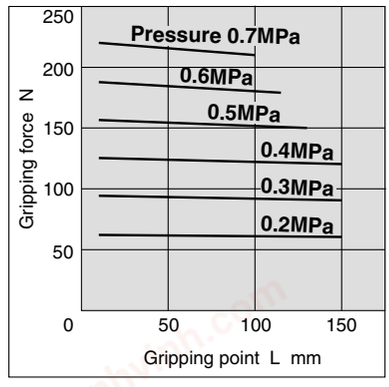

MHZ2-40D

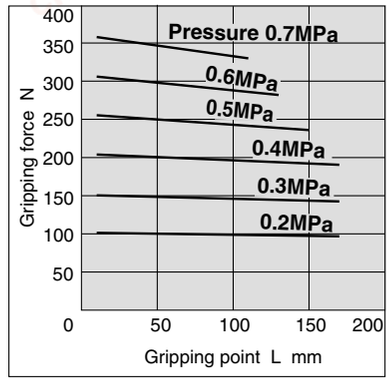

chanhvinh.com

Model Selection

Step 1 Effective gripping force: Series MHZ□2/Double acting/Internal gripping force

• Expressing the effective gripping force
The effective gripping force shown in the graphs to the right is expressed as F, which is the impellent force of one finger, when both fingers and attachments are in full contact with the work piece as shown in the figure below.

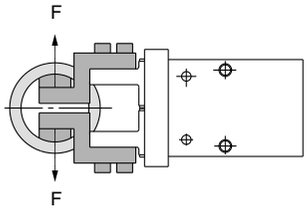

Internal gripping

MHZA2, MHZ2, MHZL2

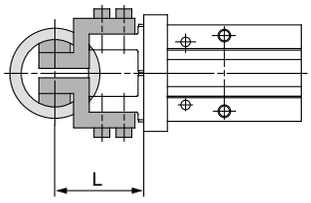

Internal gripping force

MHZ2-6D/MHZA2-6D

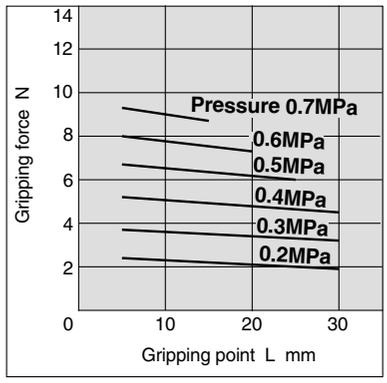

MHZ2-10D/MHZL2-10D

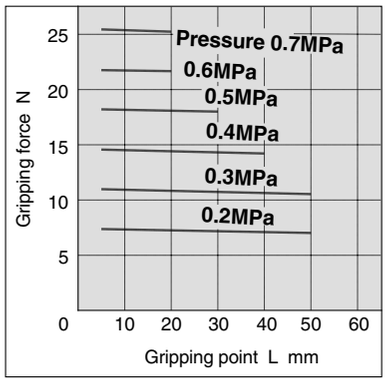

MHZ2-16D/MHZL2-16D

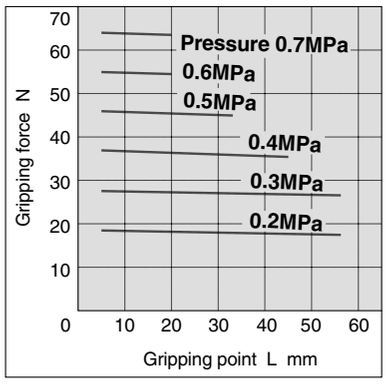

MHZ2-20D/MHZL2-20D

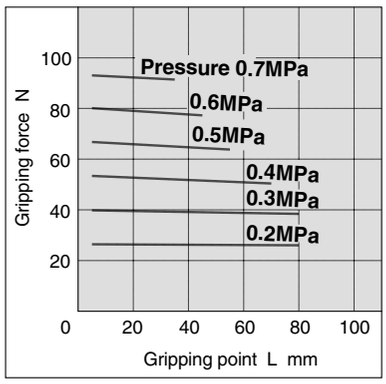

Internal gripping force

MHZ2-25D/MHZL2-25D

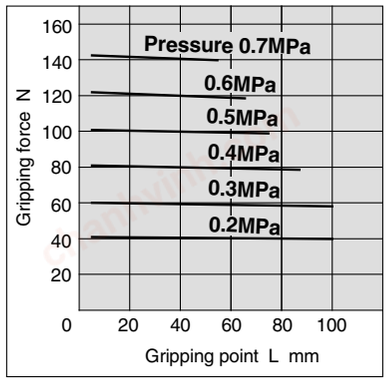

MHZ2-32D

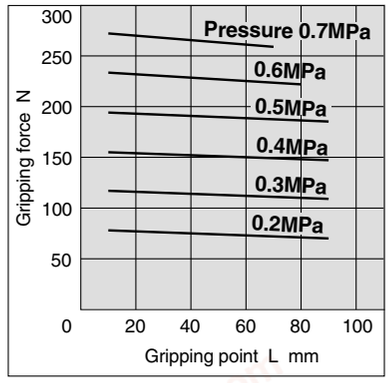

MHZ2-40D

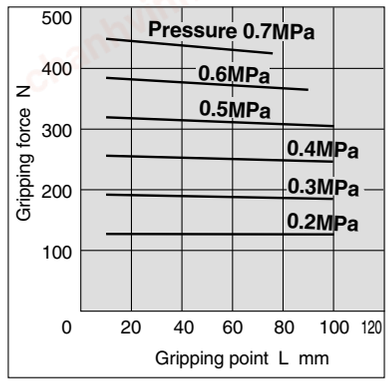

chanhvinh.com

Step 1 Effective gripping force: Series MHZ□2/Single acting/External gripping force

• Expressing the effective gripping force
The effective gripping force shown in the graphs to the right is expressed as F, which is the impellent force of one finger, when both fingers and attachments are in full contact with the work piece as shown in the figure below.

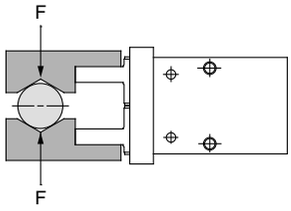

External gripping

MHZA2, MHZ2, MHZL2

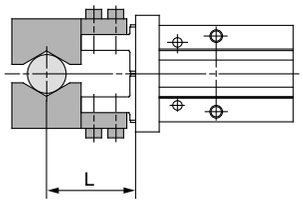

External gripping force

MHZ2-6S/MHZA2-6S

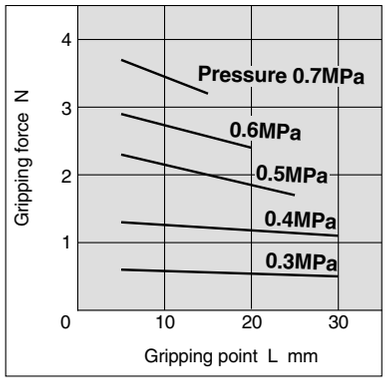

MHZ2-10S/MHZL2-10S

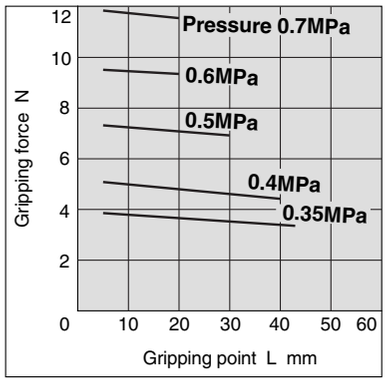

MHZ2-16S/MHZL2-16S

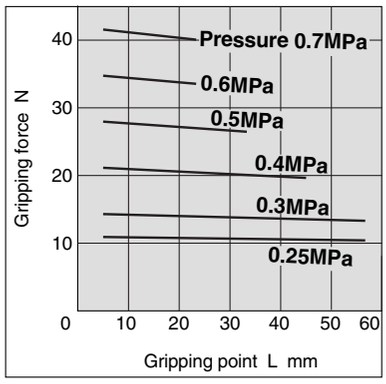

MHZ2-20S/MHZL-20S

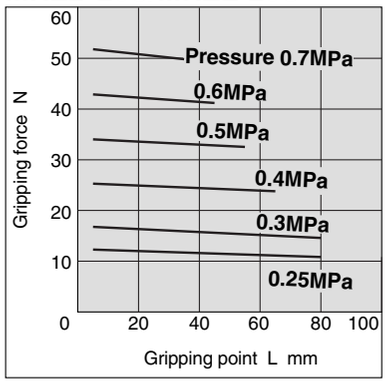

External gripping force

MHZ2-25S/MHZL2-25S

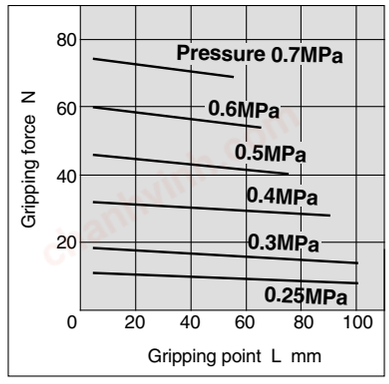

MHZ2-32S

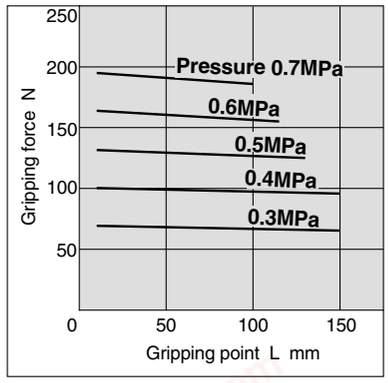

MHZ2-40S

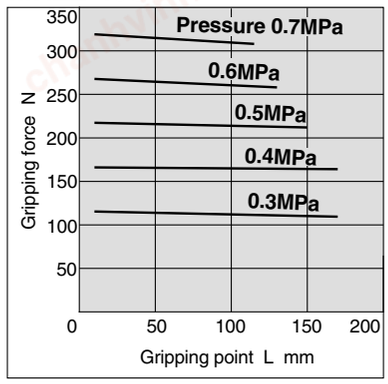

chanhvinh.com

Model Selection

Step 1 Effective gripping force: Series MHZ□2/Single acting/Internal gripping force

• Expressing the effective gripping force
The effective gripping force shown in the graphs to the right is expressed as F, which is the impellent force of one finger, when both fingers and attachments are in full contact with the work piece as shown in the figure below.

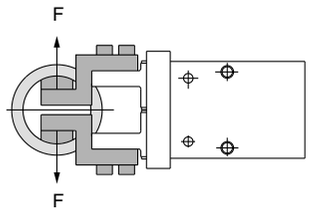

Internal gripping

MHZA2, MHZ2, MHZL2

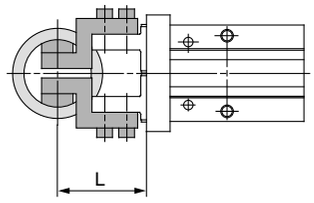

Internal gripping force

MHZ2-6C/MHZA2-6C

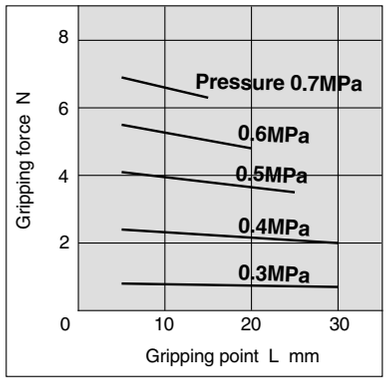

MHZ2-10C/MHZL2-10C

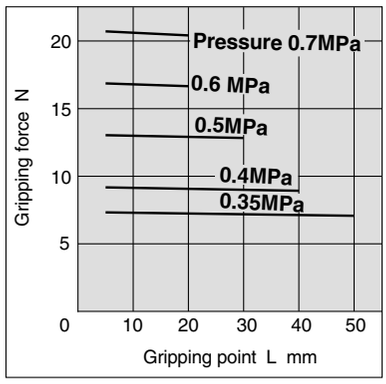

MHZ2-16C/MHZL2-16C

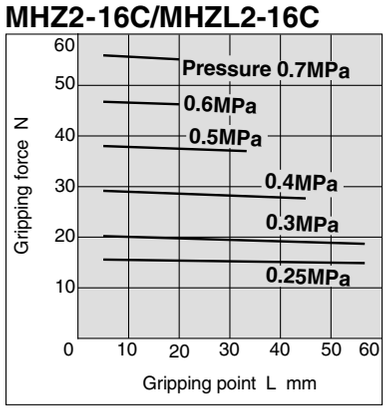

MHZ2-20C/MHZL2-20C

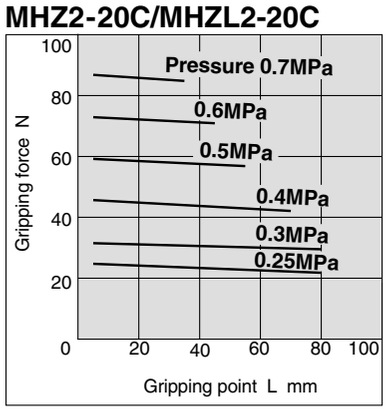

Internal gripping force

MHZ2-25C/MHZL2-25C

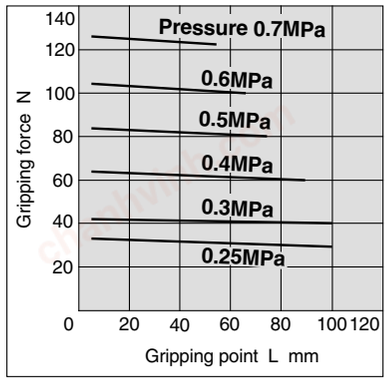

MHZ2-32C

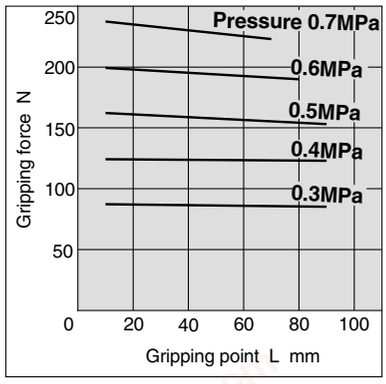

MHZ2-40C

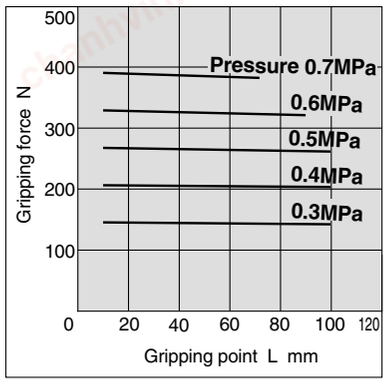

chanhvinh.com

Step 1 Effective gripping force: Series MHZ□2/Double acting/External gripping force

• Expressing the effective gripping force
The effective gripping force shown in the graphs to the right is expressed as F, which is the impellent force of one finger, when both fingers and attachments are in full contact with the work piece as shown in the figure below.

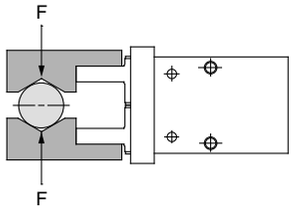

External gripping

MHZAJ2, MHZJ2, 11-MHZ2

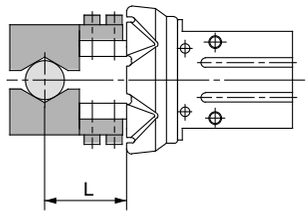

External gripping force

MHZJ2-6D/MHZAJ2-6D

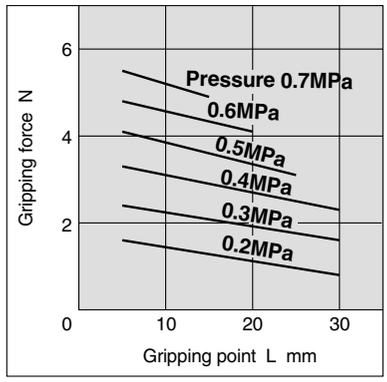

MHZJ2-10D/11-MHZ2-10D

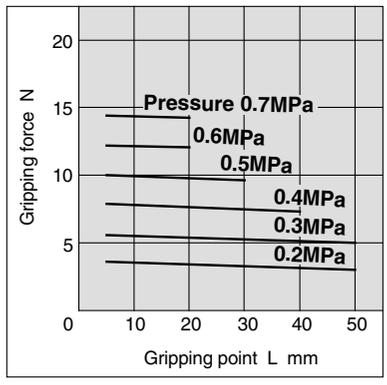

MHZJ2-16D/11-MHZ2-16D

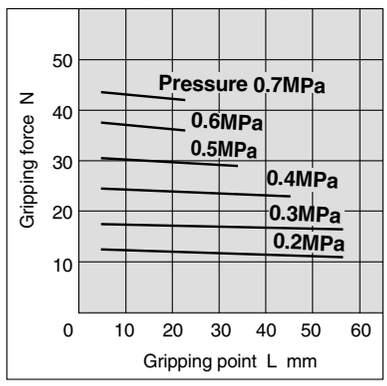

MHZJ2-20D/11-MHZ2-20D

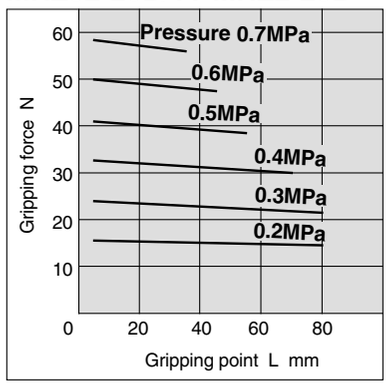

External gripping force

MHZJ2-25D/11-MHZ2-25D

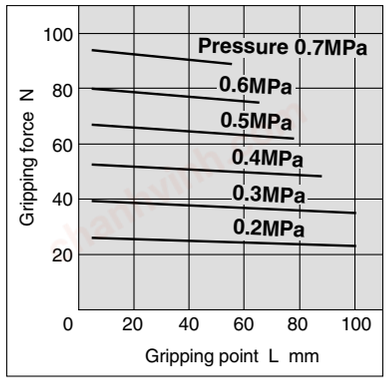

chanhvinh.com

Model Selection

Step 1 Effective gripping force: Series MHZ□2/Double acting/Internal gripping force

• Expressing the effective gripping force
The effective gripping force shown in the graphs to the right is expressed as F, which is the impellent force of one finger, when both fingers and attachments are in full contact with the work piece as shown in the figure below.

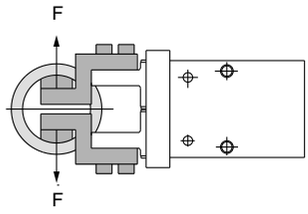

Internal gripping

MHZAJ2, MHZJ2, 11-MHZ2

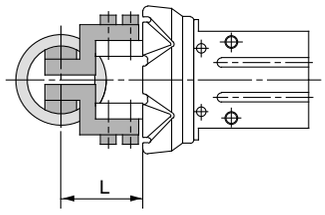

Internal gripping force

MHZJ2-6D/MHZAJ2-6D

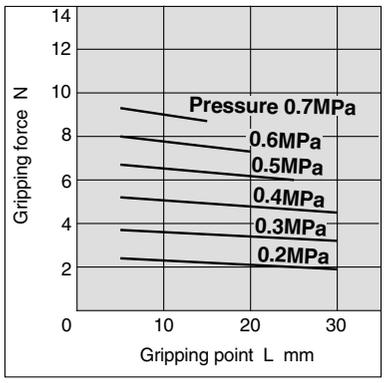

MHZJ2-10D/11-MHZ2-10D

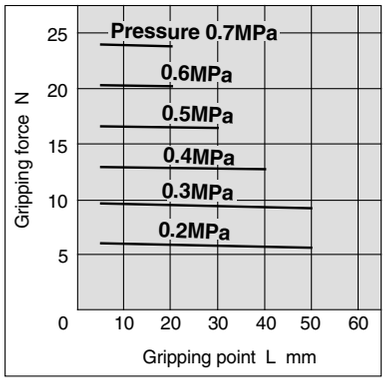

MHZJ2-16D/11-MHZ2-16D

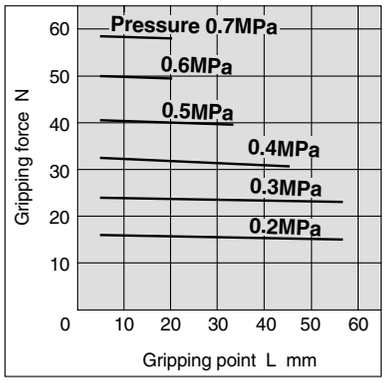

MHZJ2-20D/11-MHZ2-20D

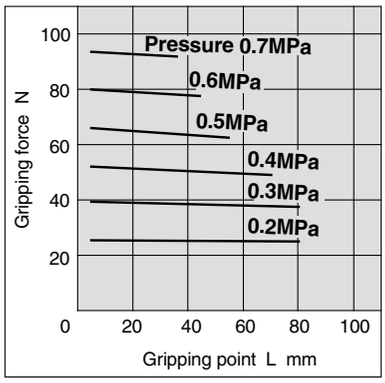

Internal gripping force

MHZJ2-25D/11-MHZ2-25D

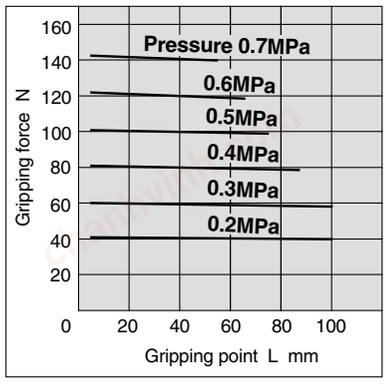

chanhvinh.com

Step 1 Effective gripping force: Series MHZ□2/Single acting/External gripping force

• Expressing the effective gripping force
The effective gripping force shown in the graphs to the right is expressed as F, which is the impellent force of one finger, when both fingers and attachments are in full contact with the work piece as shown in the figure below.

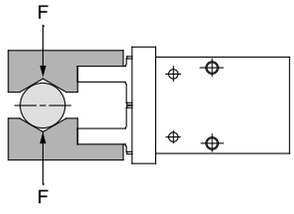

External gripping

MHZAJ2, MHZJ2

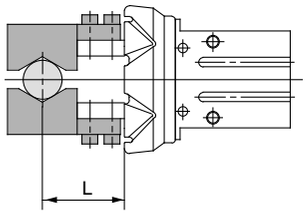

External gripping force

MHZJ2-6S/MHZAJ2-6S

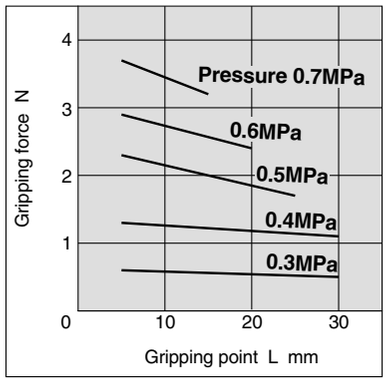

MHZJ2-10S

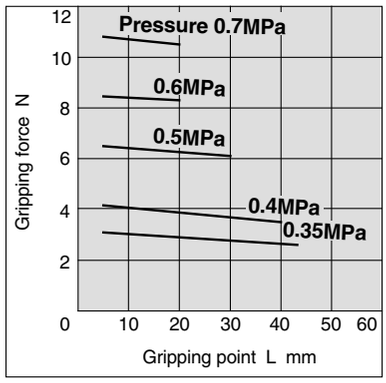

MHZJ2-16S

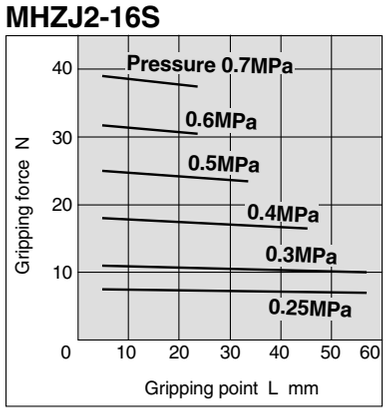

MHZJ2-20S

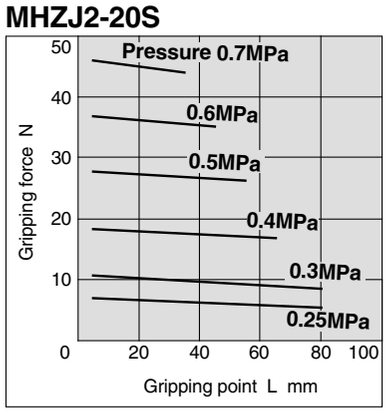

External gripping force

MHZJ2-25S

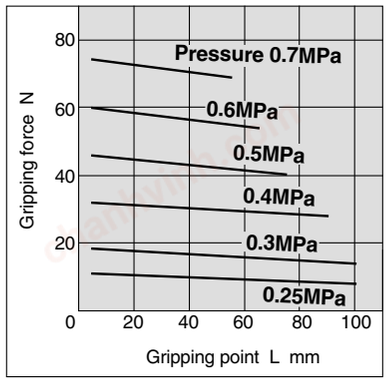

chanhvinh.com

Model Selection

Step 1 Effective gripping force: Series MHZ□2/Single acting/Internal gripping force

• Expressing the effective gripping force
The effective gripping force shown in the graphs to the right is expressed as F, which is the impellent force of one finger, when both fingers and attachments are in full contact with the work piece as shown in the figure below.

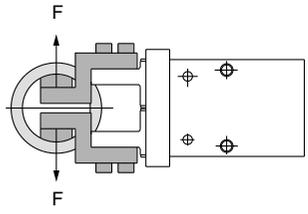

Internal gripping

MHZAJ2, MHZJ2

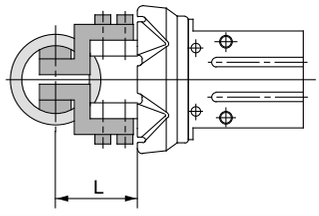

Internal gripping force

MHZJ2-6C/MHZAJ2-6C

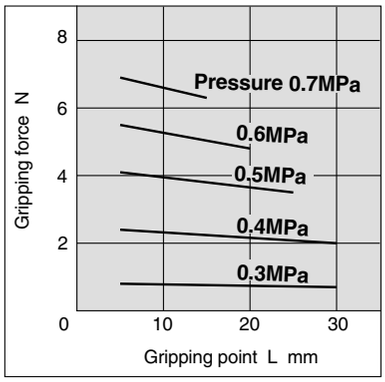

MHZJ2-10C

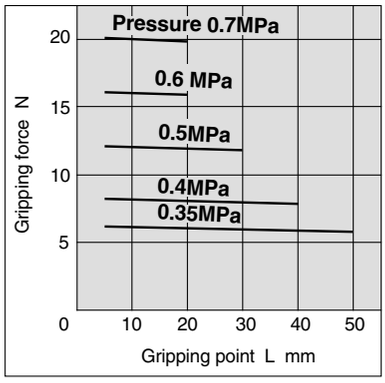

MHZJ2-16C

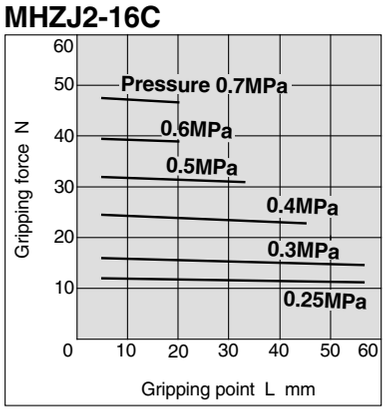

MHZJ2-20C

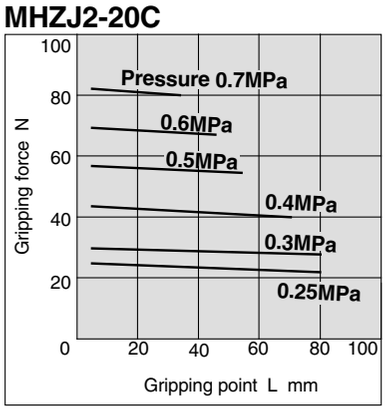

Internal gripping force

MHZJ2-25C

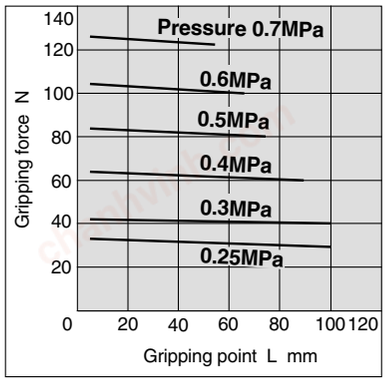

chanhvinh.com

Step 2 Confirmation of gripping point: Series MHZ□/External gripping

External gripping

MHZ□2, 11-MHZ2

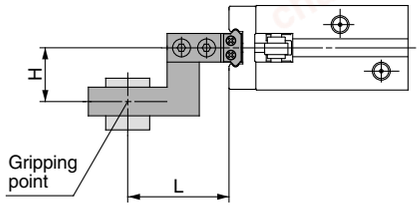

MHZAJ2, MHZJ2

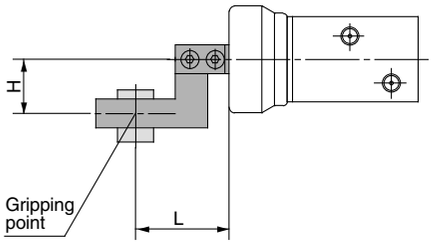

- The air gripper should be operated so that the work piece gripping point "L" and the amount of overhang "H" stay within the range shown for each operating pressure given in the graphs to the right.
- If the work piece gripping point goes beyond the range limits, this will have an adverse effect on the life of the air gripper.

External gripping

MHZ□2-6□

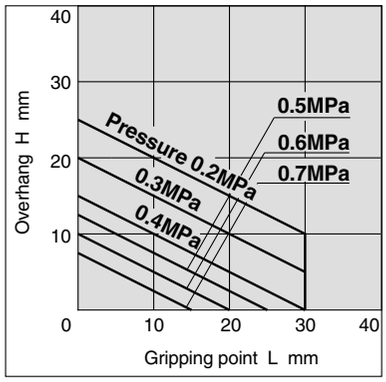

MHZ□2-10□/11-MHZ2-10□

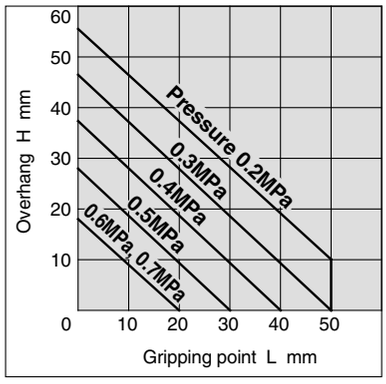

MHZ□2-16□/11-MHZ2-16□

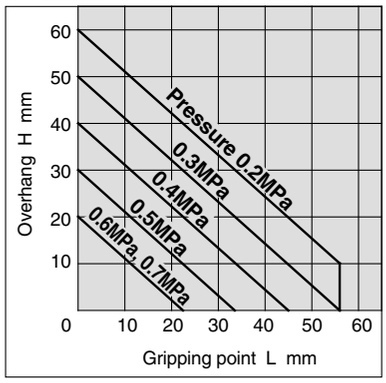

MHZ□2-20□/11-MHZ2-20□

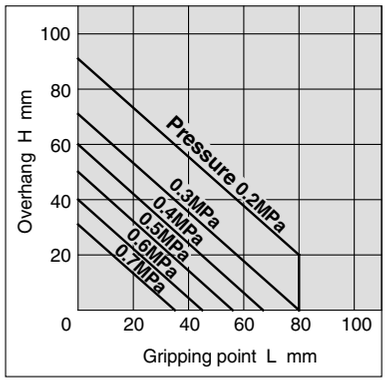

External gripping

MHZ□2-25□/11-MHZ2-25□

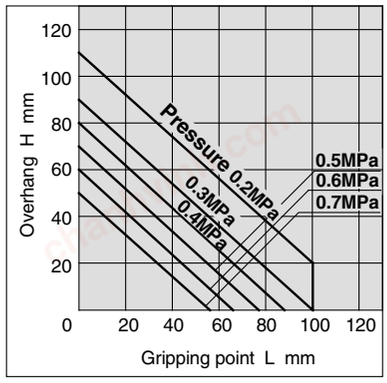

MHZ2-32□

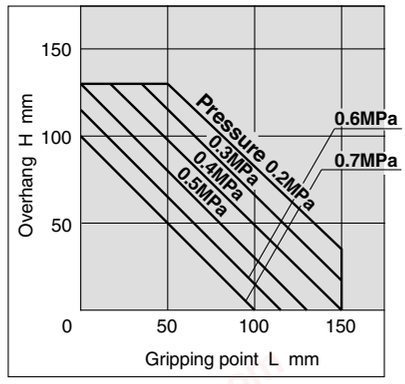

MHZ2-40□

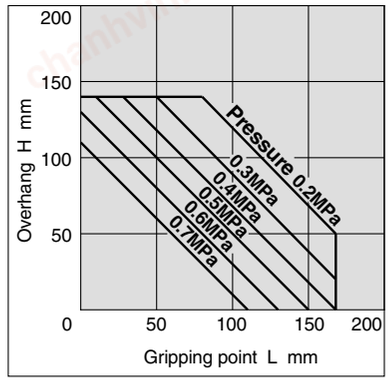

chanhvinh.com

Model Selection

Step 2 Confirmation of gripping point: Series MHZ□/Internal gripping

Internal gripping

MHZ□2, 11-MHZ2

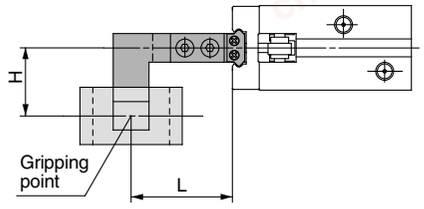

MHZAJ2, MHZJ2

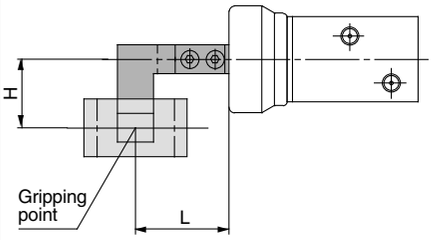

- The air gripper should be operated so that the work piece gripping point "L" and the amount of overhang "H" stay within the range shown for each operating pressure given in the graphs to the right.
- If the work piece gripping point goes beyond the range limits, this will have an adverse effect on the life of the air gripper.

Internal gripping

MHZ□2-6□

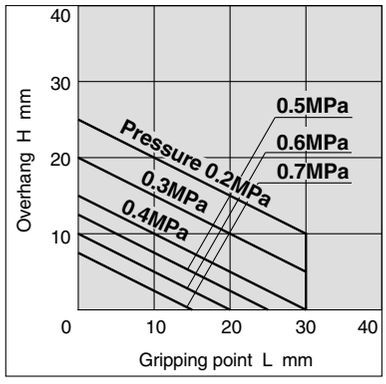

MHZ□2-10□/11-MHZ2-10□

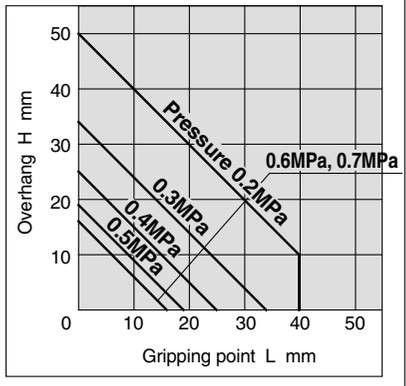

MHZ□2-16□/11-MHZ2-16□

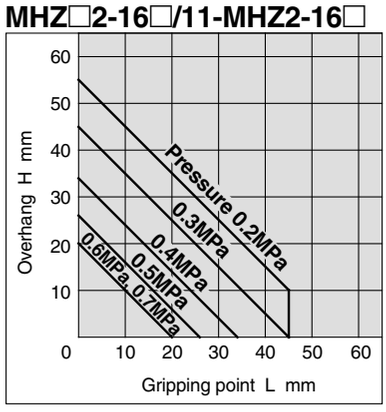

MHZ□2-20□/11-MHZ2-20□

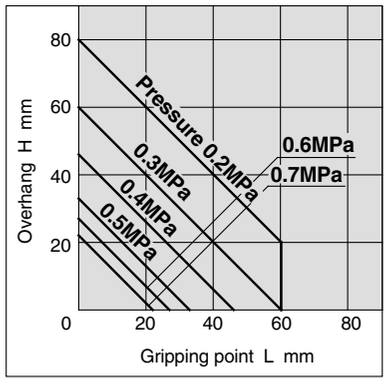

Internal gripping

MHZ□2-25□/11-MHZ2-25□

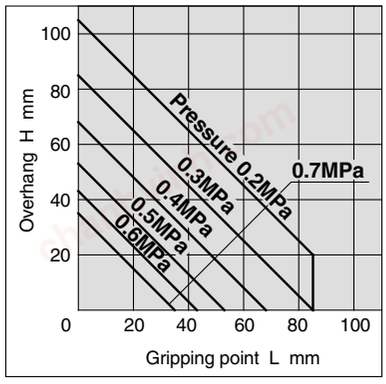

MHZ2-32□

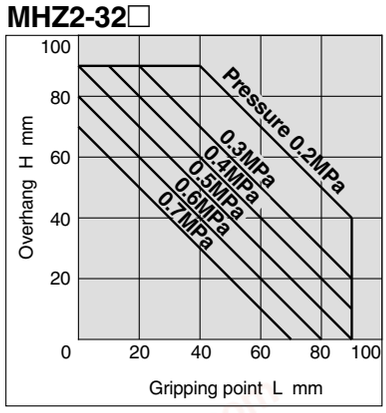

MHZ2-40□

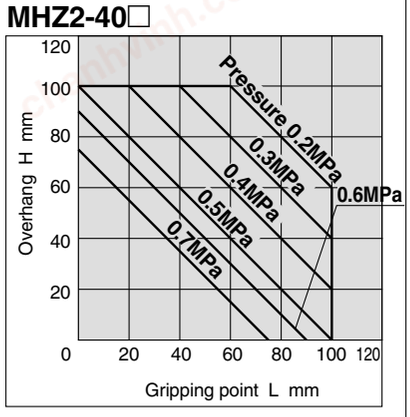

chanhvinh.com

Step 3 Confirmation of external force on fingers: Series MHZ□2

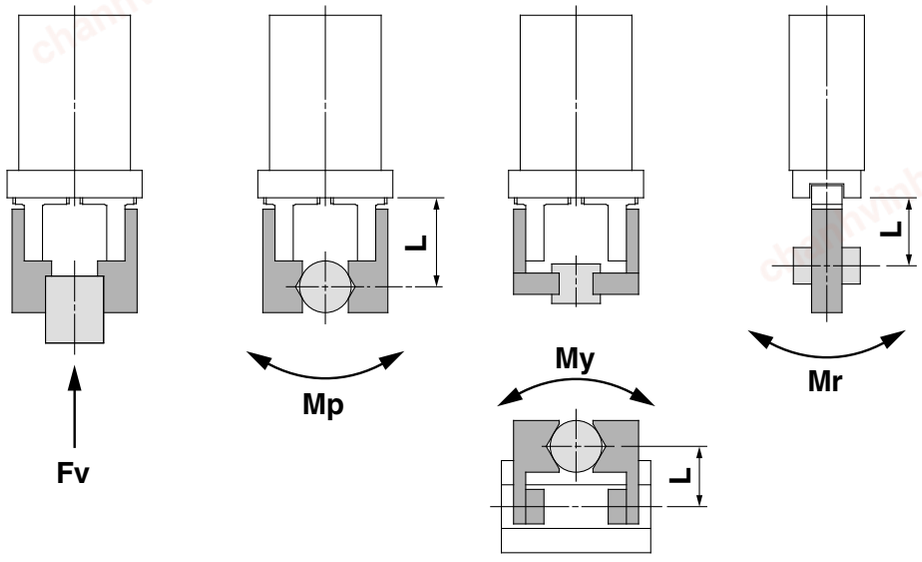

L: Distance to the point at which the load is applied (mm)

Model	Allowable vertical load **Fv (N)**	Maximum allowable moment		
		Pitch moment: **Mp (N·m)**	Yaw moment: **My (N·m)**	Roll moment: **Mr (N·m)**
MHZ□2-6	10	0.04	0.04	0.08
MHZ□2-10	58	0.26	0.26	0.53
MHZ□2-16	98	0.68	0.68	1.36
MHZ□2-20	147	1.32	1.32	2.65
MHZ□2-25	255	1.94	1.94	3.88
MHZ□2-32	343	3	3	6
MHZ□2-40	490	4.5	4.5	9

Note) Values for load and moment in the table indicate static values.

Calculation of allowable external force (when moment load is applied)	Calculation example
Allowable load F (N) $= \dfrac{\text{M (maximum allowable moment) (N·m)}}{\text{L} \times 10^{-3}_{*}}$ (∗ Unit conversion constant)	When a static load of f = 10N is operating, which applies pitch moment to point L = 30mm from the MHZ□2-16D guide. **Allowable load F** $= \dfrac{0.68}{30 \times 10^{-3}}$ **= 22.7 (N)** **Load f = 10 (N) < 22.7 (N)** Therefore, it can be used.