chanhvinh.com

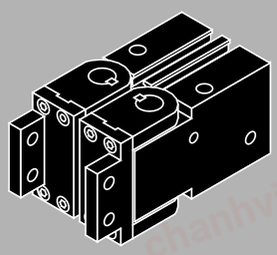

180° Angular Gripper

Cam Style | Rack & Pinion Style

Series MHY2/MHW2

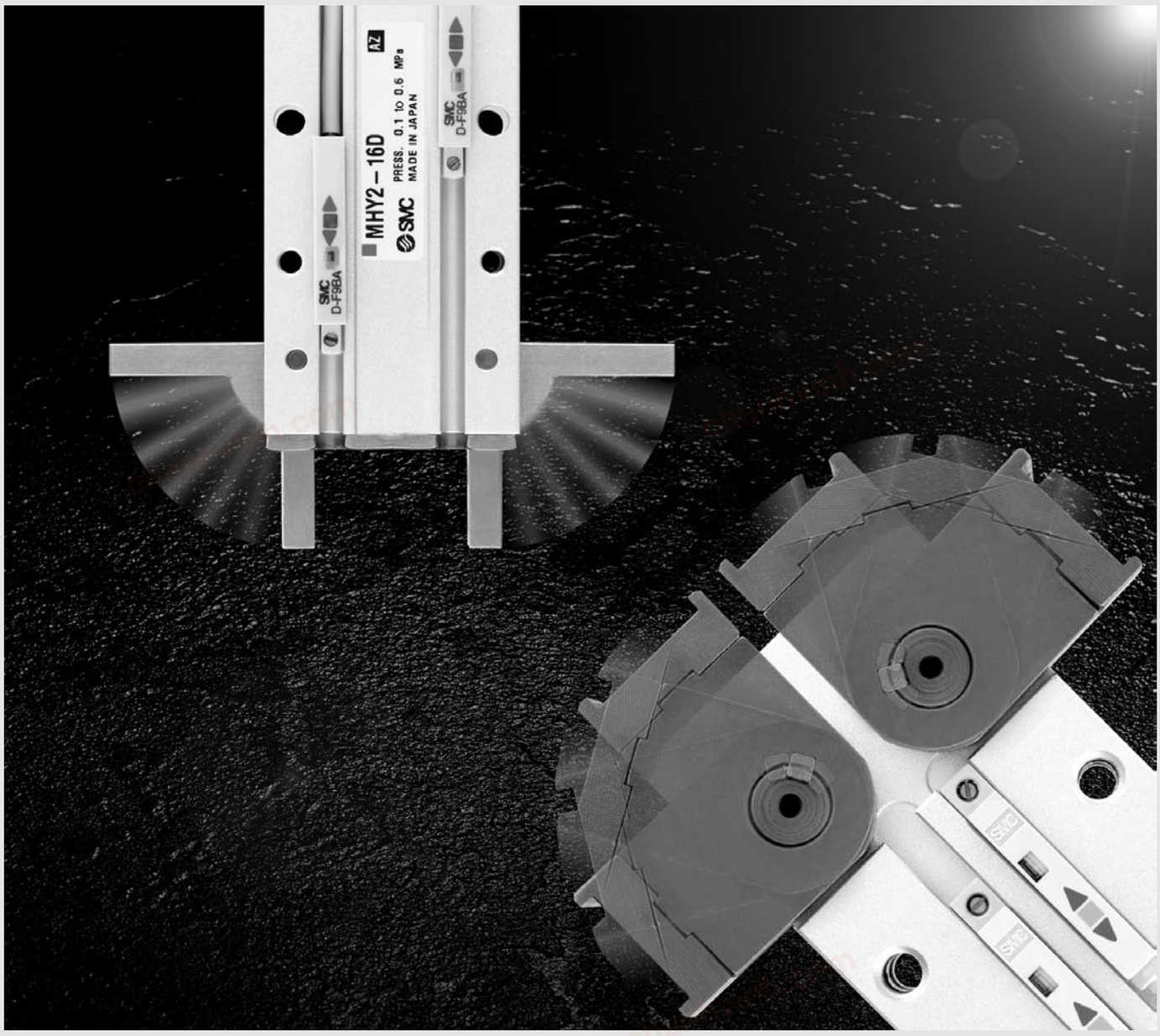

Cam actuation style is now standardised !

chanhvinh.com

180° Angular Gripper

Cam Style Rack & Pinion Style

Series MHY2/MHW2

Series MHY/Cam Style

Light and compact size in small bore sizes



Model	Bore size mm	Effective holding moment* Nm	Overall length Lmm (L)	Weight g
MHY2-10D	10	0.16	71	70
MHY2-16D	16	0.54	84	150
MHY2-20D	20	1.10	106	320
MHY2-25D	25	2.28	131	560

*At pressure of 0.5MPa

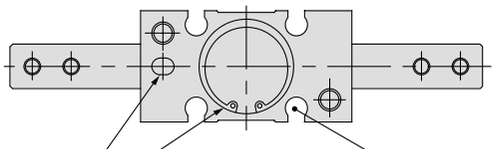

Improved mounting repeatability

Auto switch mounting at 4 locations

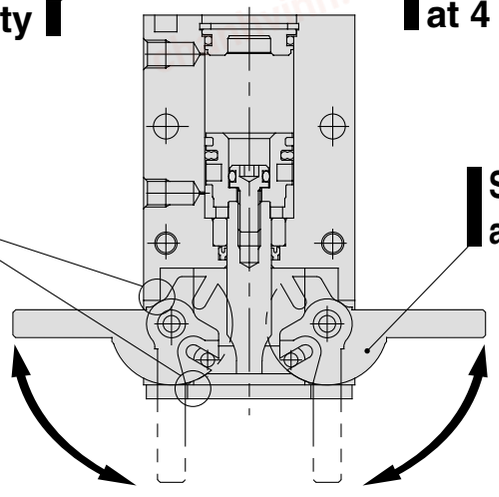

Resistance to dusty environments

Reduced opening sizes helps prevent foreign substance from entering.

Stainless steel fingers are standard.

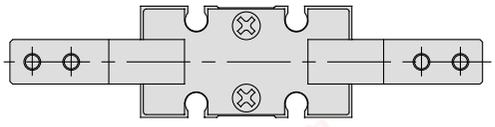

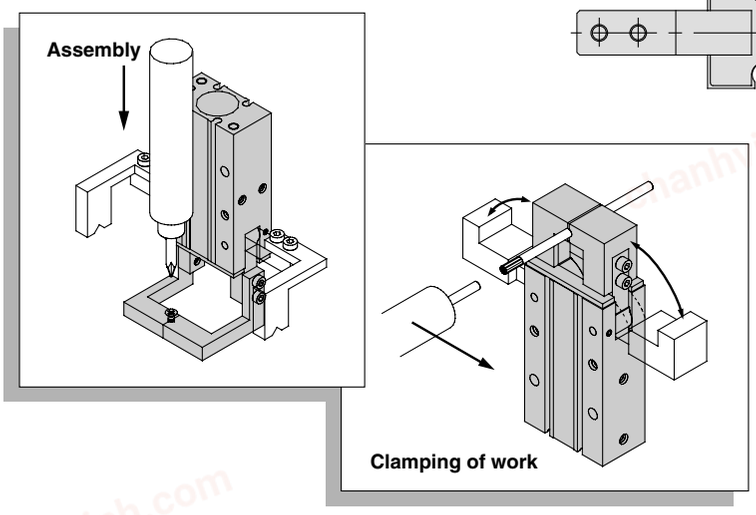

Variation

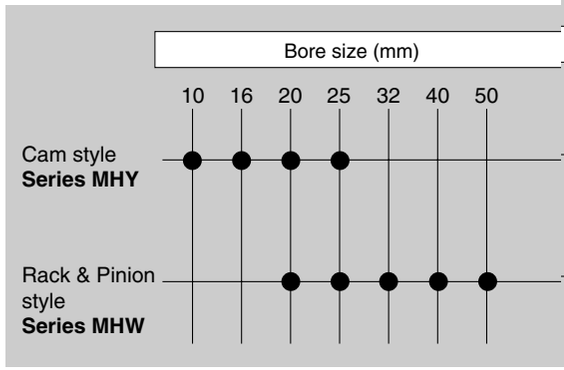

chanhvinh.com

Series MHW/Rack & Pinion Style

Unique seal design allows shorter total length construction and constant holding force when opening and closing fingers.
(PAT.PEND)



Model	Bore size mm	Holding mement* Nm	Over length Lmm	Weight g
MHW2-20D	20	0.30	68	300
MHW2-25D	25	0.73	78	510
MHW2-32D	32	1.61	93.5	905
MHW2-40D	40	3.70	117.5	2135
MHW2-50D	50	8.27	154	5100

*At the pressure of 0.5MPa

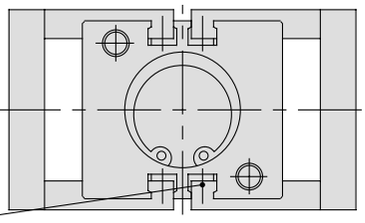

Auto switch mounting at 4 locations

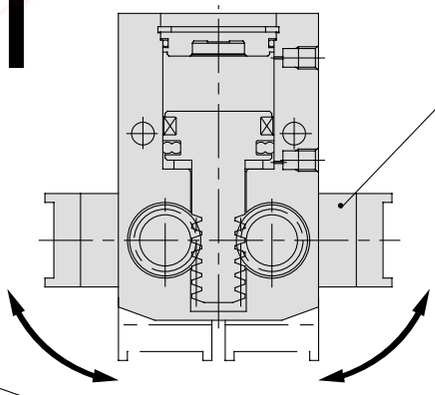

Two finger styles available.

Flat finger type

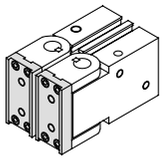

Right angle finger type

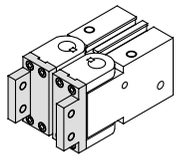

Key connection is ideal for impact resistance.

Key connection between finger and shaft prevents finger angle slippage during impact.

Dust proof construction

Seal arrangement protects gripper from harsh dusty environments.

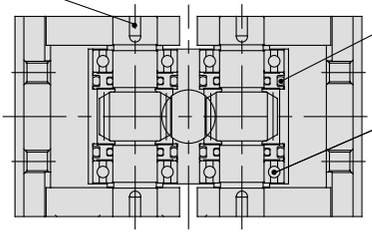

Bearings are standard.

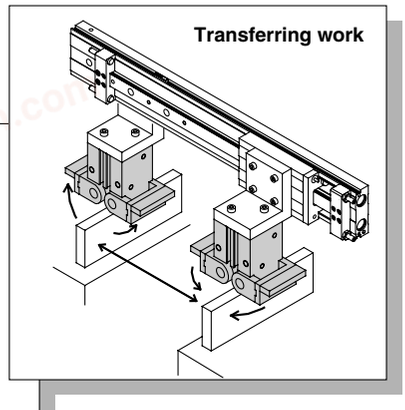

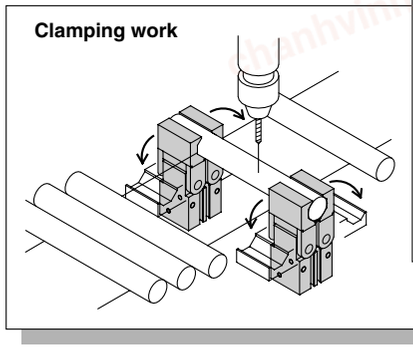

INDEX

	Applicable auto switch	Page
	Solid state switch D- M9/M9 □ W type Water resistant 2 color indication D-M9BA Type	P.5-248
	Solid state switch D-Y5/Y6 type D-Y7 type Water resistant 2 color indication D-Y7BA type	P.5-256

chanhvinh.com

Series MHY2/MHW2
How to Select the Applicable Model

How to Select

Procedure

Step 1 Confirm holding force → **Step 2** Confirm holding force → **Step 3** Confirm moment of inertia of attachments

Step 1 Confirm holding force

Condition check → Calculation of required holding force → Model selection from the holding force graph

Example Work weight: 0.05kg →

Guidelines on model selection according to work weight

- Although the condition differs according to the coefficient of friction between the attachment and work, select a model that can produce a holding force of 10 to 20 times the work weight.
- Further allowance should be provided when great acceleration or impact is expected during work transfer.

Ex.) For setting the holding force to be at least 20 times the work weight;
Required holding force = 0.05kg X 20 X 9.8m/s^2
= 10N min.

Holding point L = 35mm →

Operating pressure: 0.6MPa →

MHY2-16D

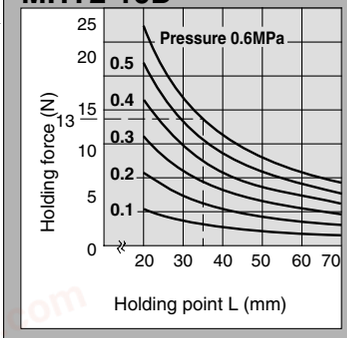

- When MHY2-16D is selected, the holding force is determined to be 13N according to the holding point distance (L = 35mm) and the pressure (0.6MPa).
- The holding force is 26 times the work weight meeting the guideline that holding force should be more than 20 times the set holding force value.

Effective holding force

Series MHY2/MHW2 Double acting

- Indication of effective holding force
  The holding force shown in the tables represents the holding force of one finger when all fingers and attachments are in contact with the work.
  (F: Thrust of one finger)

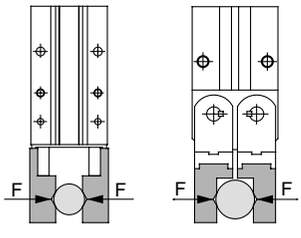

External hold

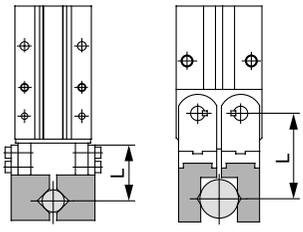

MHY2-10D

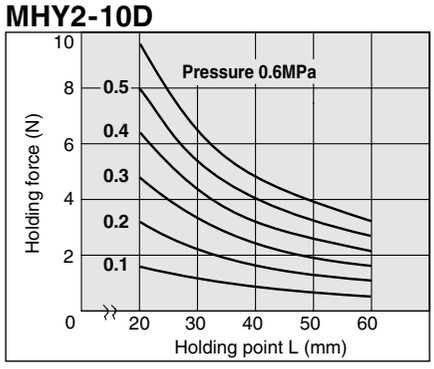

MHY2-20D

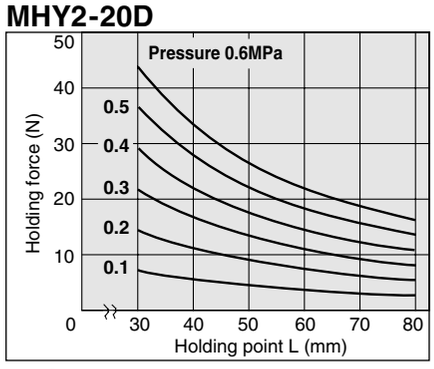

MHY2-16D

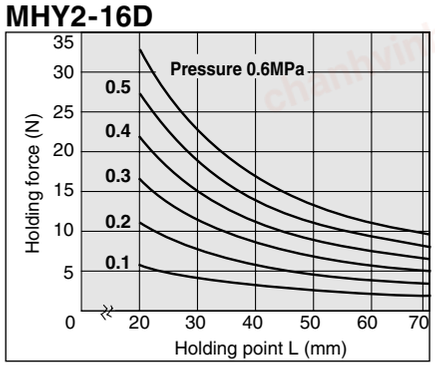

MHY2-25D

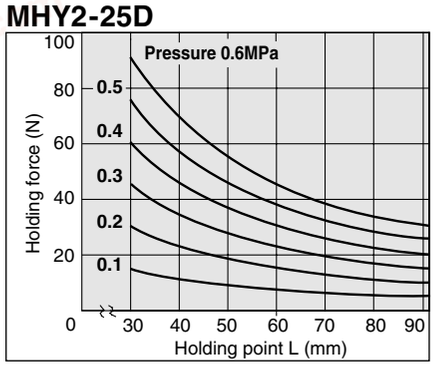

chanhvinh.com

MHW2-20D

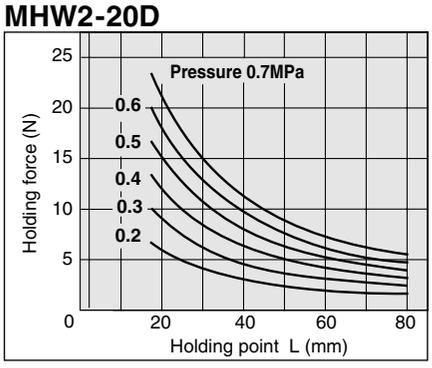

MHW2-32D

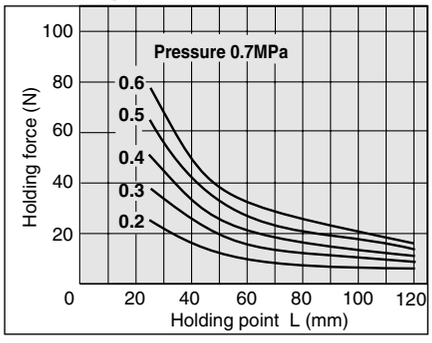

MHW2-50D

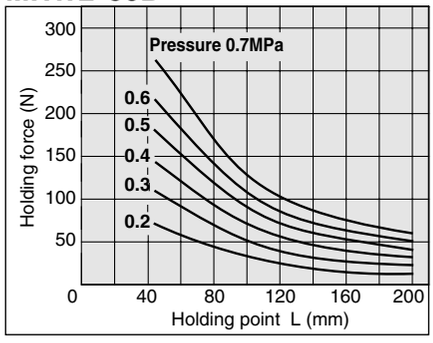

MHW2-25D

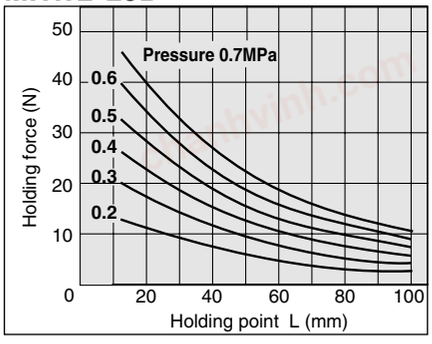

MHW2-40D

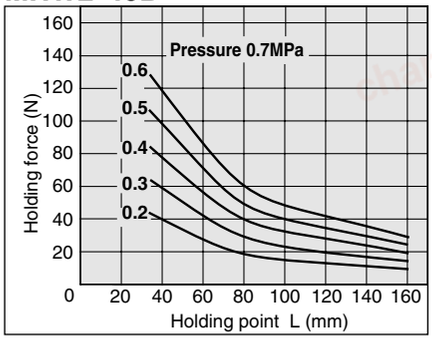

Step 2 Confirmation of holding point

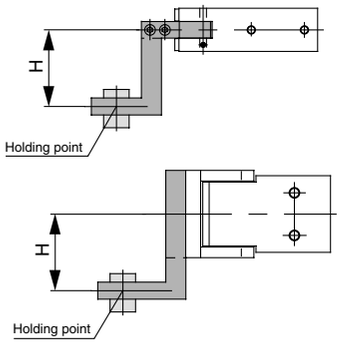

MHY

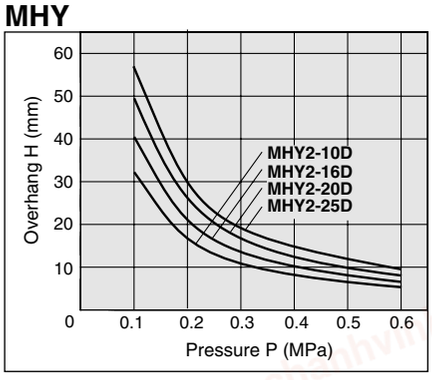

MHW

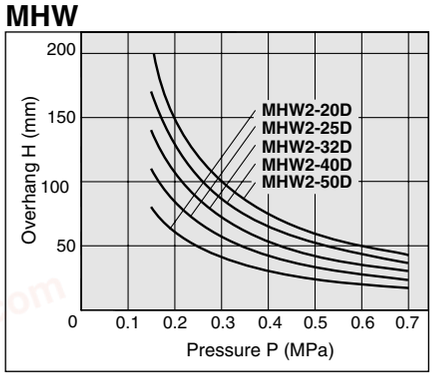

- Work should be held at a point within the range of overhanging distance (H) for a given pressure indicated in the tables on the right.
- When the work is held at a point outside of the recommended range for a given pressure, it may causes adverse effect on the product life.

chanhvinh.com

Series MHY2/MHW2
How to Select the Applicable Model

Step 3 Confirm moment of inertia of attachments

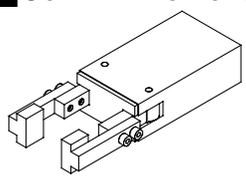

Confirm the moment of inertia for the attachment at one side. Calculate the moment of inertia for A and B separately as shown in the figures on the right.

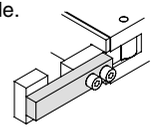

A part

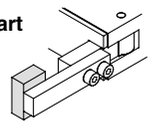

B part

Procedure	Formula	Calculation example
1 **Check the operating conditions, dimensions of attachment, etc.**	A part 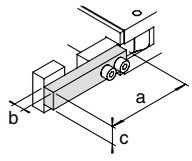 B part 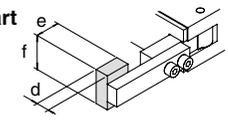 	Operating model: MHY2-16D Opening time: 0.15s a = 40 (mm) b = 7 (mm) c = 8 (mm) d = 5 (mm) e = 10 (mm) f = 12 (mm)
2 **Calculate the moment of inertia of attachment.**	A part 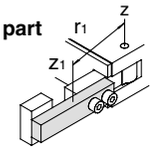 Calculation of weight m_1 = a X b X c X Specific gravity Moment of inertia around Z1 axis $I_{Z1} = \{m_1(a^2 + b^2)/12\} \times \frac{10^{-6}}{*}$ Moment of inertia around Z axis $I_A = I_{Z1} + m_1 r_1^2 \times \frac{10^{-6}}{*}$ B part 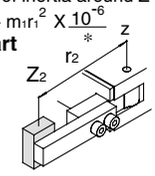 Calculation of weight m_2 = d X e X f X Specific gravity Moment of inertia around Z2 axis $I_{Z2} = \{m_2(d^2 + e^2)/12\} \times \frac{10^{-6}}{*}$ Moment of inertia around Z axis $I_B = I_{Z2} + m_2 r_2^2 \times \frac{10^{-6}}{*}$ Total moment of inertia $I = I_A + I_B$ (*: constant for unit conversion)	Material of attachment: Aluminum alloy (Specific gravity = 2.7) r_1 = 37 (mm) $m_1 = 40 \times 7 \times 8 \times 2.7 \times 10^{-6}$ $= 0.006$(kg) $I_{Z1} = \{0.006 \times (40^2+7^2)/12\} \times 10^{-6}$ $= 0.8 \times 10^{-6}$ (kgm^2) $I_A = 0.8 \times 10^{-6} + 0.006 \times 37^2 \times 10^{-6}$ $= 9.0 \times 10^{-6}$(kgm^2) r_2 = 47(mm) $m_2 = 5 \times 10 \times 12 \times 2.7 \times 10^{-6}$ $= 0.002$(kg) $I_{Z2} = \{0.002 \times (5^2 + 10^2)/12\} \times 10^{-6}$ $= 0.02 \times 10^{-6}$ (kgm^2) $I_B = 0.02 \times 10^{-6} + 0.002 \times 47^2 \times 10^{-6}$ $= 4.4 \times 10^{-6}$ (kgm^2) $I = 9.0 \times 10^{-6} + 4.4 \times 10^{-6}$ $= 13.4 \times 10^{-6} = 0.13 \times 10^{-4}$ (kgm^2)
3 **Determine the allowable moment of inertia from the graph.**	**MHY2-16D** 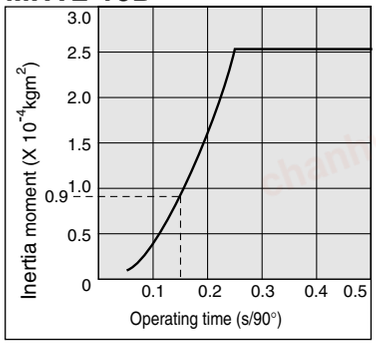 	The moment of inertia is determined to be 0.9 X 10^{-4} (kgm^2) according to the operating time (0.15s) from the graph on the left.
4 **Confirm the moment of inertia of one attachment is within the allowable range.**	Moment of inertia of attachment < Allowable moment of intertia	0.13 X 10^{-4} (kgm^2) < 0.9 X 10^{-4} (kgm^2) Possible to use this model MHY2-16D completely.

chanhvinh.com

Symbol

Symbol	Definition	Unit
Z	Finger rotation axis	—
Z_1	Axis on the centre gravity of A part of attachment and parallel to Z	—
Z_2	Axis on the centre gravity of B part of attachment and parallel to Z	—
I	Total moment of inertia for attachment	kgm^2
I_{Z1}	Inertia moment around the Z1 axis of A part of attachment	kgm^2
I_{Z2}	Inertia moment around the Z2 axis of B part of attachment	kgm^2

Symbol	Definition	Unit
I_A	Moment of inertia around the Z axis of A part of attachment	kgm^2
I_B	Moment of inertia around the Z axis of B part of attachment	kgm^2
m_1	Weight of A part of attachment	kg
m_2	Weight of B part of attachment	kg
r_1	Distance between Z and Z1 axis	mm
r_2	Distance between Z and Z2 axis	mm

Allowable range of inertia moment of attachment

MHY2-10D

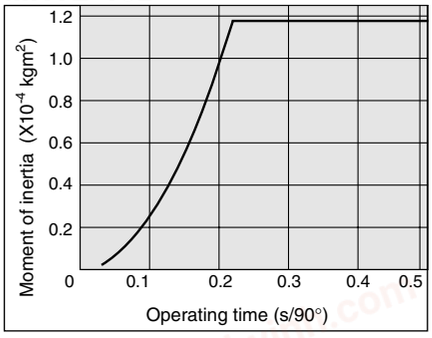

MHW2-20D

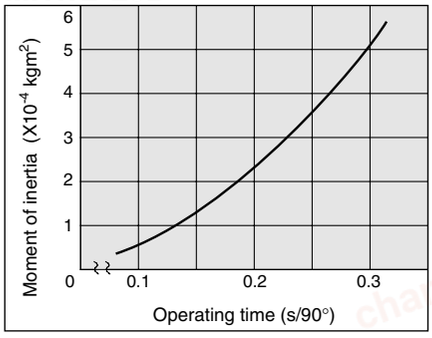

MHW2-50D

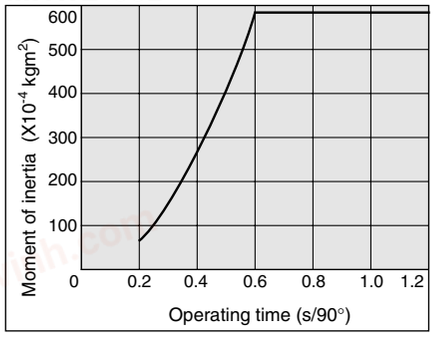

MHY2-16D

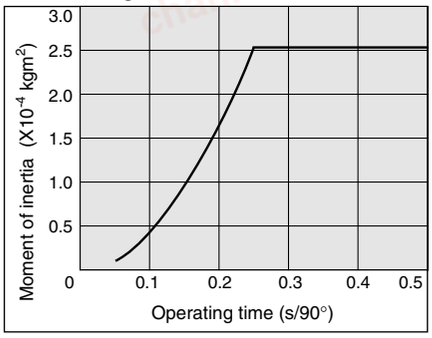

MHW2-25D

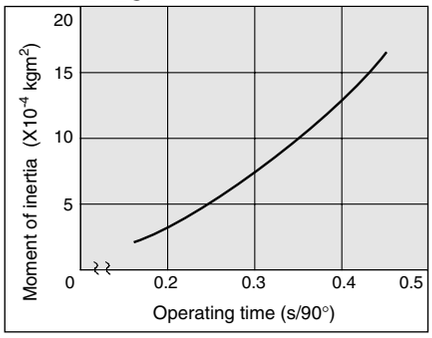

MHY2-20D

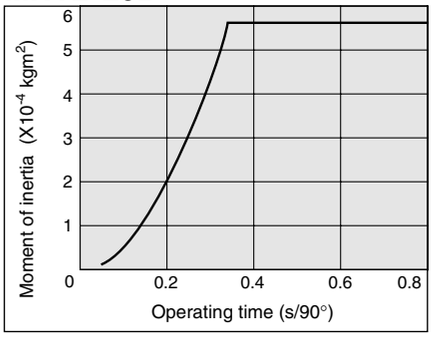

MHW2-32D

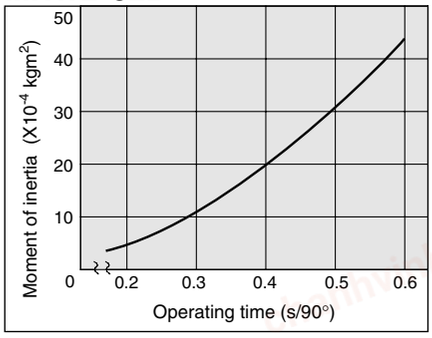

MHY2-25D

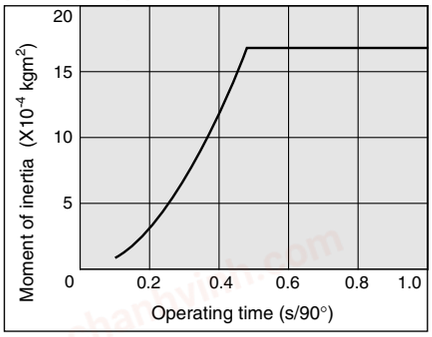

MHW2-40D

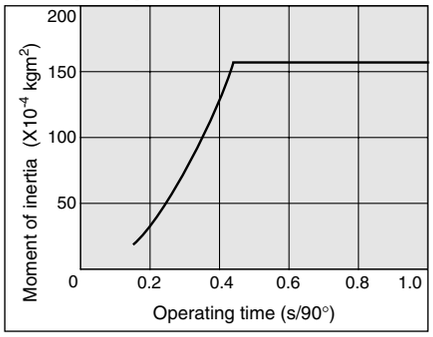

chanhvinh.com

180° Angular Gripper Cam Style

Series MHY2

ø10, ø16, ø20, ø25

How to Order

MHY 2—16 D 2—M9NL S

Number of fingers

2	2 fingers

Bore size

10	10mm
16	16mm
20	20mm
25	25mm

Action

D	Double acting

Finger option

–: Standard tap mounting

2: Opening/closing direction through hole

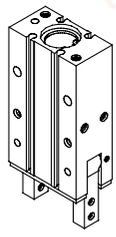

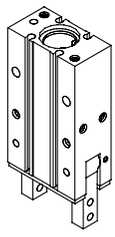

Auto switch

—	Without auto switch

*Refer to the table below for the applicable auto switches.

Number of auto switches

—	2
S	1

Applicable Auto Switches

Type	Special function	Electrical entry	Indicator	Wiring (Output)	Load voltage			Symbol		Lead wire length (m)		Applicable load
								Electrical entry		0.5 (–)	3 (L)	
					DC		AC	Perpendicular	In-line			
Solid state	—	Grommet	With	3 wire (NPN)	24V	5V 12V	—	M9NV	M9N	●	●	Relay PLC
				3 wire (PNP)				M9PV	M9P	●	●	
				2 wire		12V		M9BV	M9B	●	●	
	Diagnosis indicator (2 colour indication)			3 wire (NPN)		5V 12V		M9NWV	M9NW	●	●	
				3 wire (PNP)				M9PWV	M9PW	●	●	
				2 wire		12V		M9BWV	M9BW	●	●	

*Lead wire length: 0.5m·····– (Example) M9N
3m·····L (Example) M9NL

Note 1) Refer to "Auto Switch Specifications" on p.6-15

chanhvinh.com



Specifications

Fluid	Air
Operating pressure	0.1 to 0.6MPa
Ambient and fluid temperature	–10 to 60°C
Repeatability	±0.2mm
Max. operating frequency	60c.p.m
Lubrication	Not required
Action	Double acting
Auto switch (Optional) Note)	Solid state switch (3 wire, 2 wire)

Note) Refer to p. 6-15 for details of auto switch specifications.

Symbol

Double acting

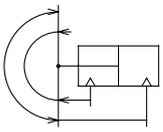

Model

Model	Bore size (mm)	Effective holding force (Nm) (1)	Opening angle (Both sides)		Weight (2) (g)
			Opening side	Closing side	
MHY2-10D	10	0.16	180°	–3°	70
MHY2-16D	16	0.54			150
MHY2-20D	20	1.10			320
MHY2-25D	25	2.28			560

Note 1) At the pressure of 0.5MPa
Note 2) Not including auto switch

- Refer to the "How to Select the Applicable Model" on p.5-244
- Refer to p.5-244 and 5-245 for the details of effective holding force and allowable overhanging distance.

chanhvinh.com

Series MHY2

Construction

Closed

ø 10

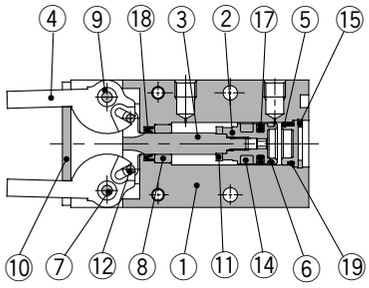

ø 16

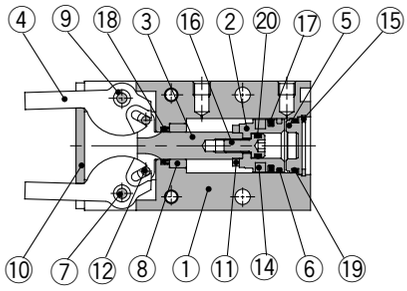

ø 20, ø 25

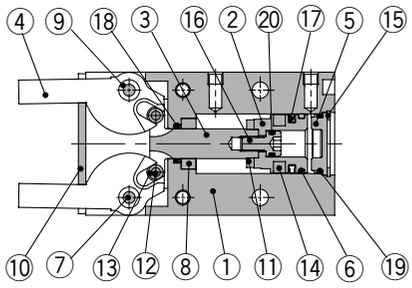

Open

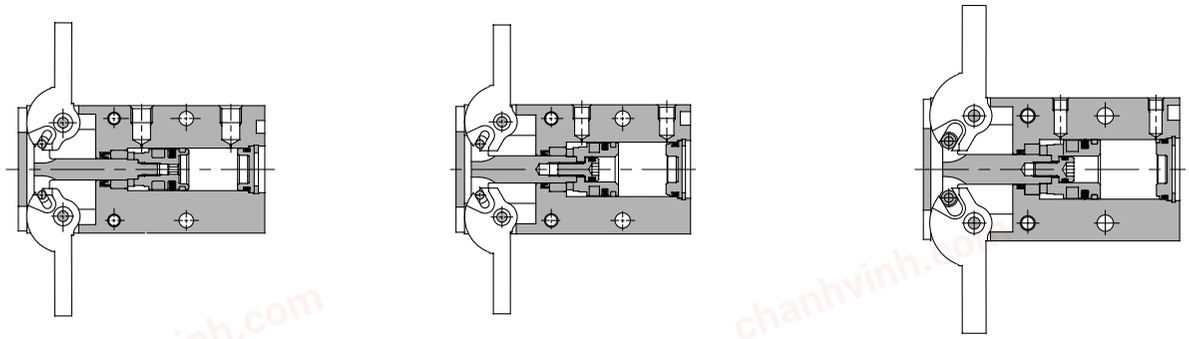

Component Parts

No.	Description	Material	Note
①	**Body**	Aluminum alloy	Hard anodized
②	**Piston**	ø10: Stainless steel ø16 to 25: Aluminum alloy	ø16 to 25: Chromated
③	**Joint**	Stainless steel	Heat treatment
④	**Finger**	Stainless steel	Heat treatment
⑤	**Cap**	Resin	
⑥	**Ware ring**	Resin	
⑦	**Shaft**	Stainless steel	Nitriding
⑧	**Bushing A**	Sintered alloy steel	

Component Parts

No.	Description	Material	Note
⑨	**Bushing B**	Sintered alloy steel	
⑩	**End plate**	Stainless steel	
⑪	**Bumper**	Urethane rubber	
⑫	**Cylindrical roller**	High carbon chrome bearing steel	
⑬	**Joint roller**	Carbon steel	Nitriding
⑭	**Rubber magnet**	Synthetic rubber	
⑮	**C-shape snap ring**	Carbon steel	Nickel plated
⑯	**Piston bolt**	Stainless steel	

Replacement Parts: Seal Kits

No.	Description	Material	Kit No.			
			MHY2-10D	**MHY2-16D**	**MHY2-20D**	**MHY2-25D**
⑰ ⑱ ⑲ ⑳	**Seal kit**	NBR	MHY10-PS	MHY16-PS	MHY20-PS	MHY25-PS

chanhvinh.com

Dimensions

MHY2-10D

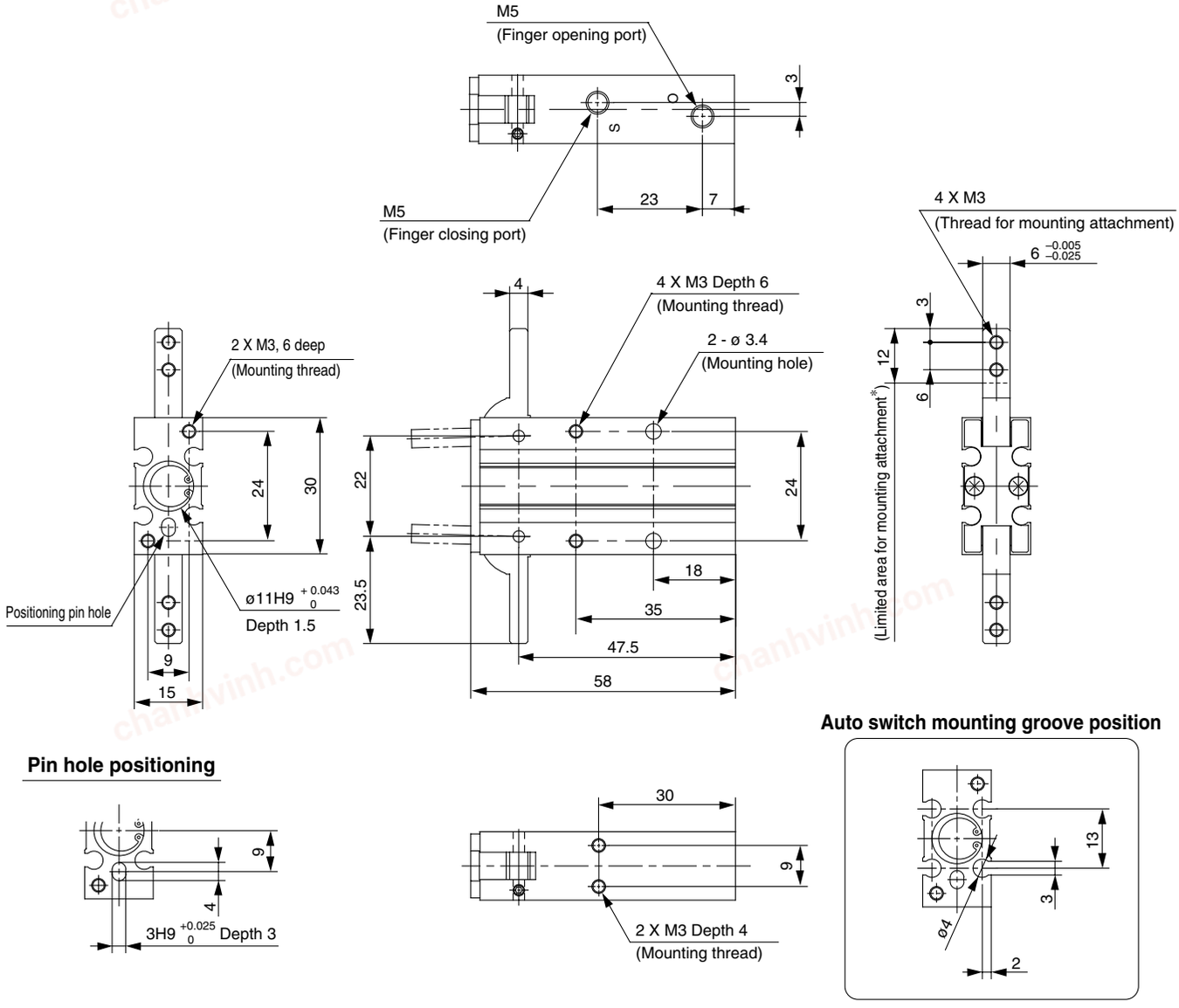

Pin hole positioning

Auto switch mounting groove position

MHY2-10D2

Opening/closing direction through hole type

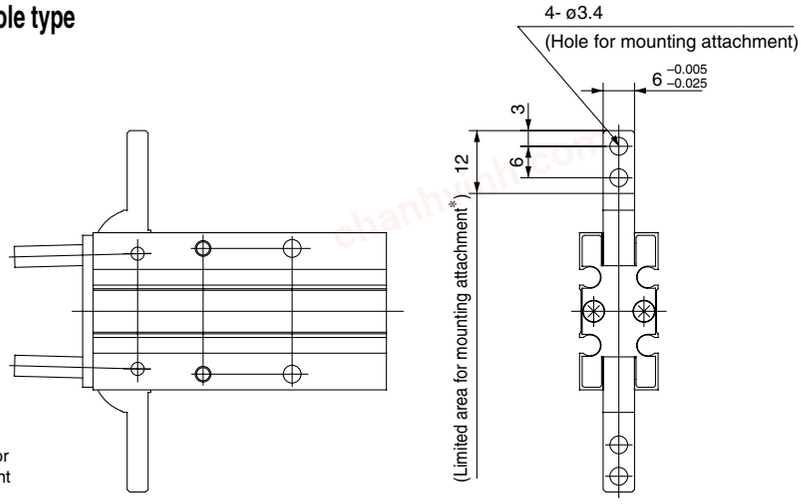

* Do not extend the attachment from limited area for mounting to avoid interference with the attachment or main body.

chanhvinh.com

Series MHY2

Dimensions

MHY2-16D

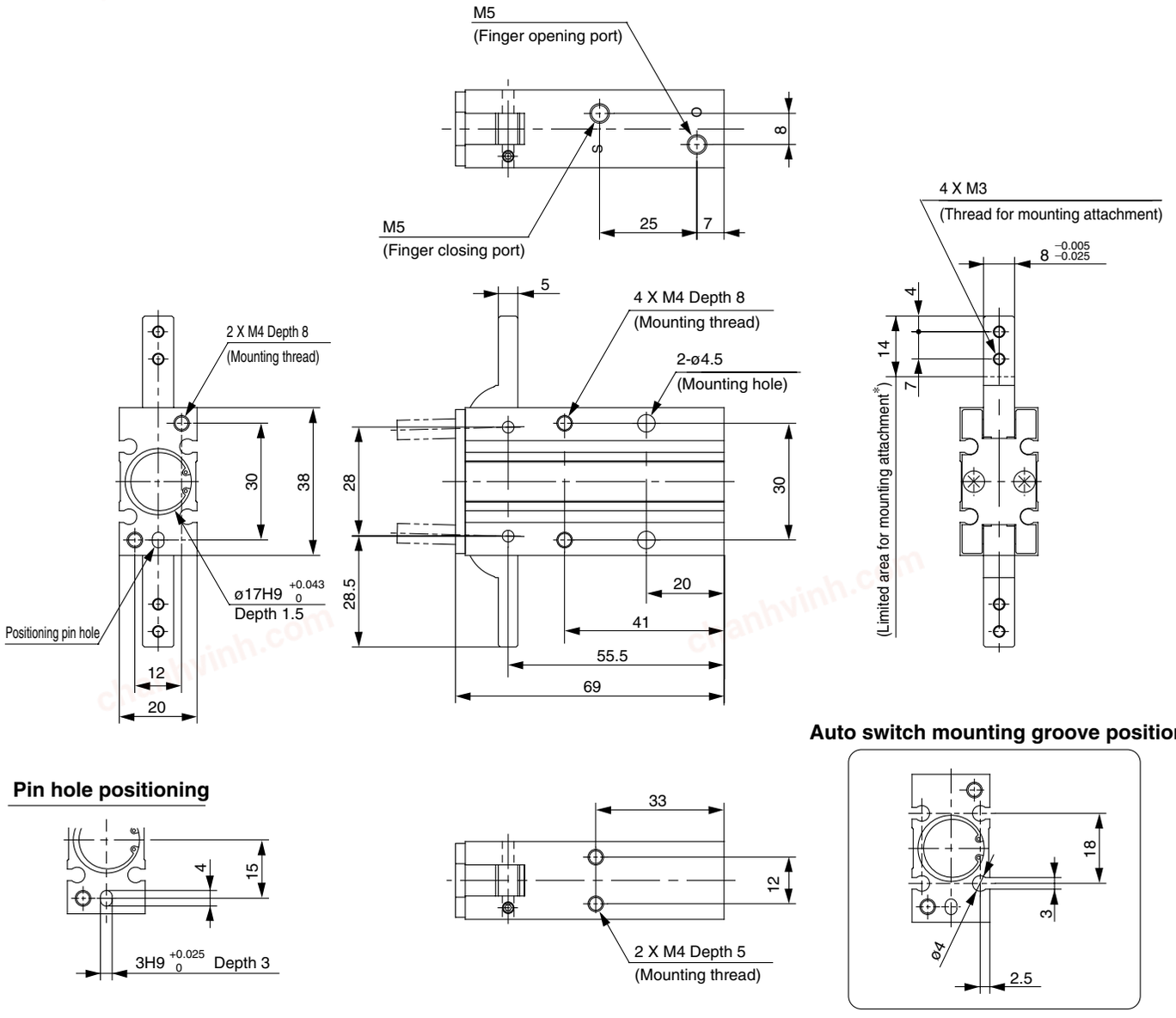

MHY2-16D2

Opening/closing direction through hole type

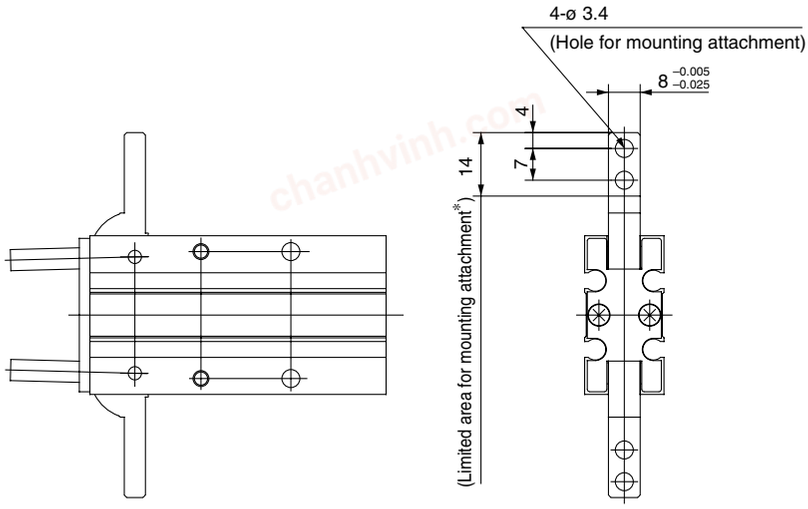

* Do not extend the attachment from limited area for mounting to avoid interference with the attachment or main body.

chanhvinh.com

MHY2-20D

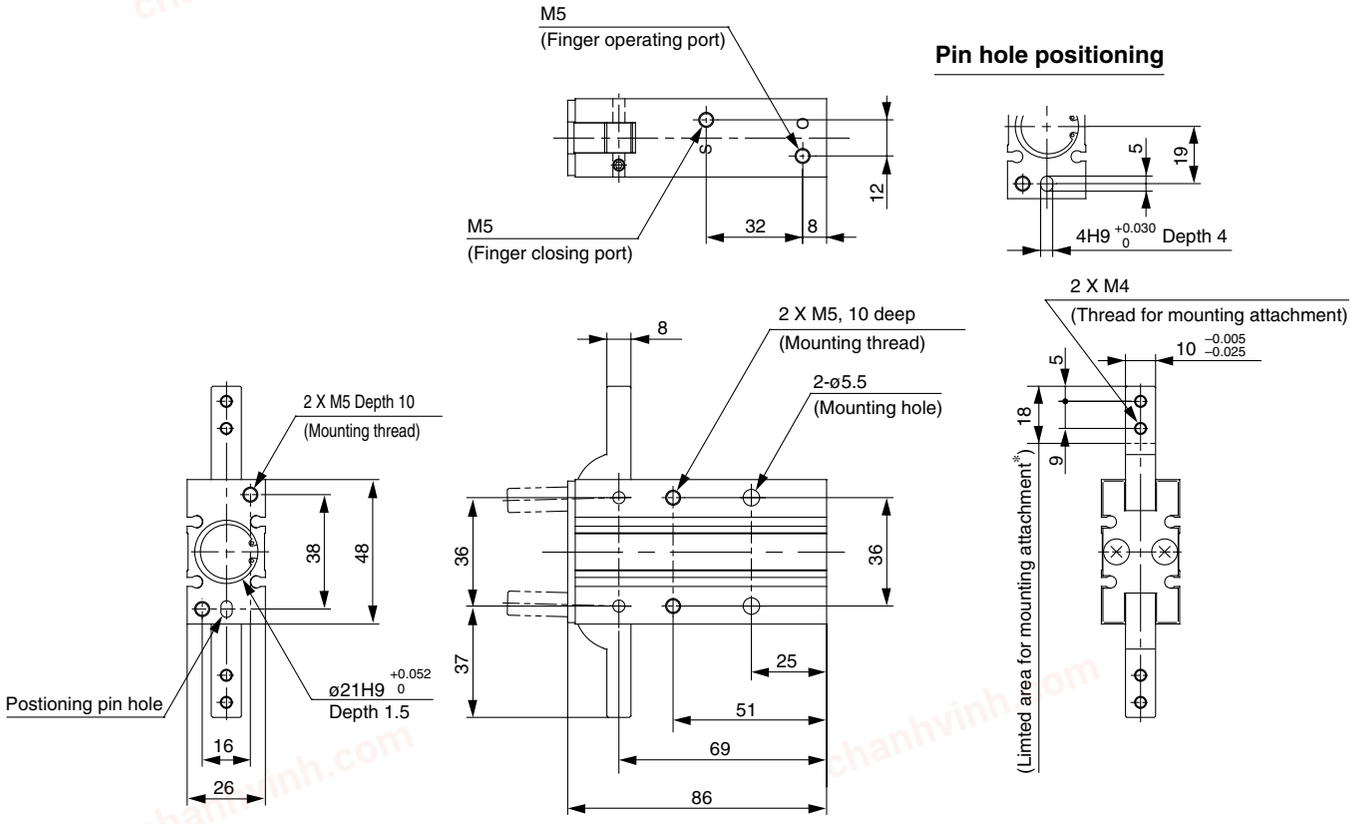

Auto switch mounting groove position

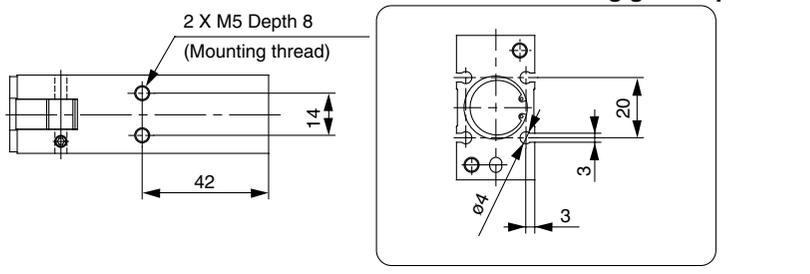

MHY2-20D2

Opening/closing direction through hole type

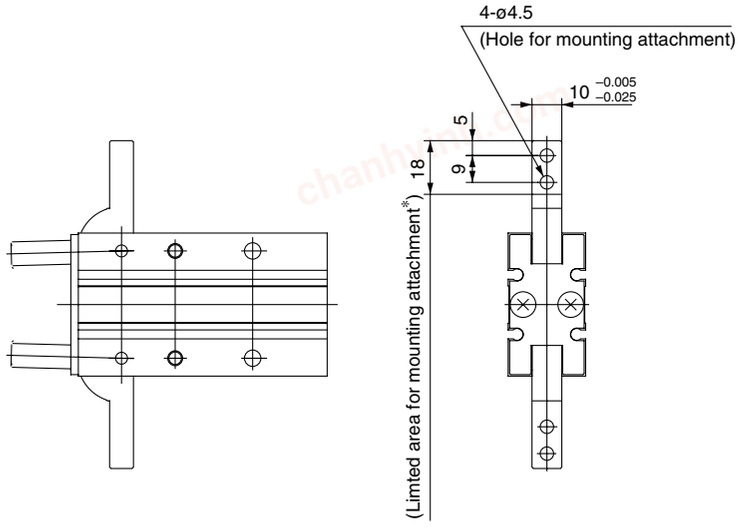

* Do not extend the attachment from limited area for mounting to avoid interference with the attachment or main body.

chanhvinh.com

Series MHY2

Dimensions

MHY2-25D

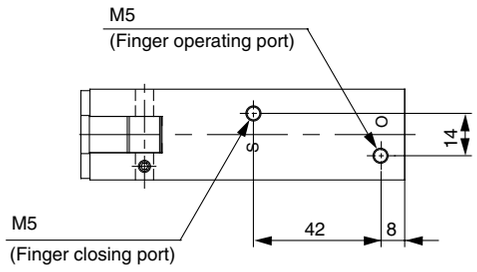

Pin hole positioning

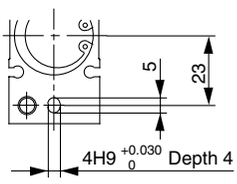

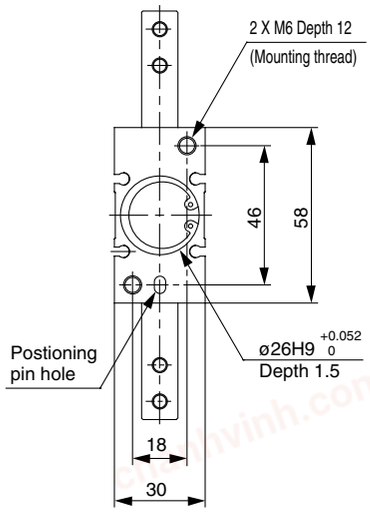

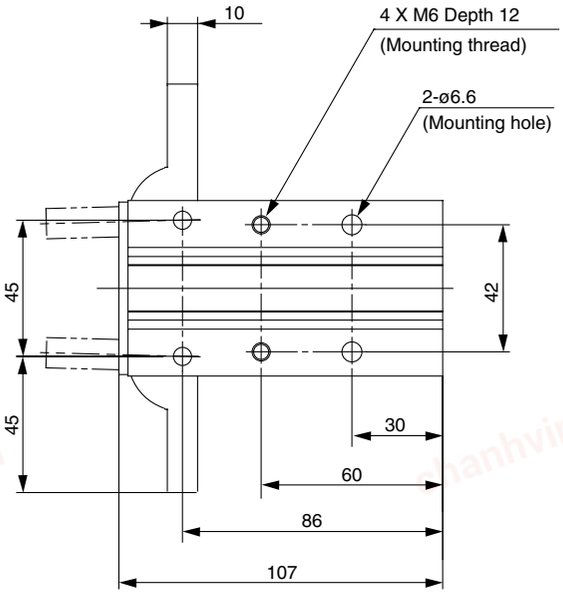

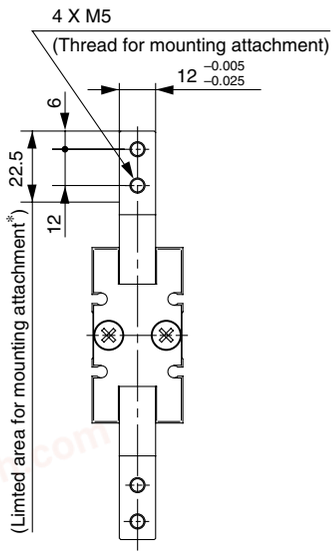

Auto switch mounting groove position

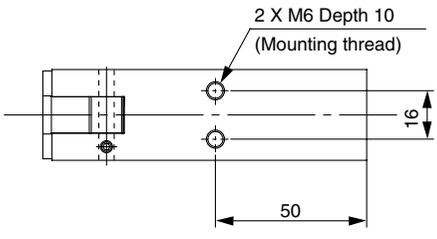

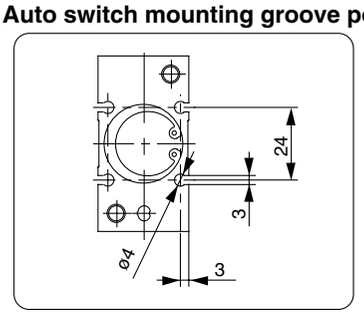

MHY2-25D2

Opening/closing direction through hole type

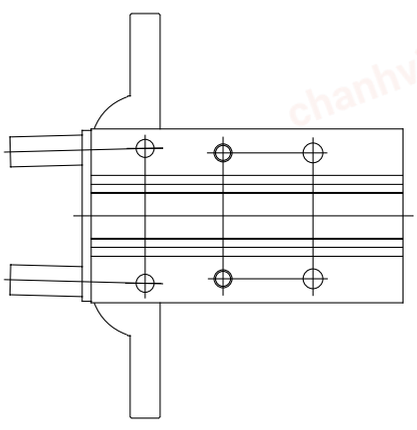

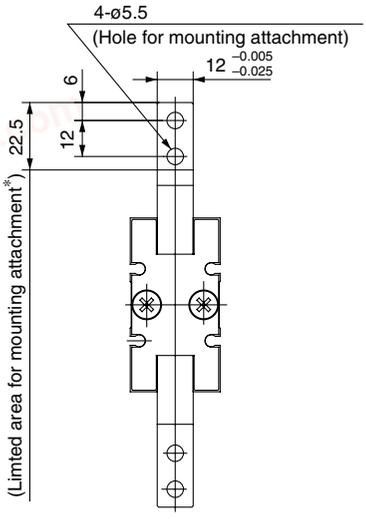

* Do not extend the attachment from limited area for mounting to avoid interference with the attachment or main body.

chanhvinh.com

Setting Method of Auto Switch

To set the auto switch, insert the auto switch into the installation groove of the gripper from the direction indicated in the following drawing.
After establishing the installation position, tighten the attached switch mounting screw with a straight bladed watchmakers screwdriver.

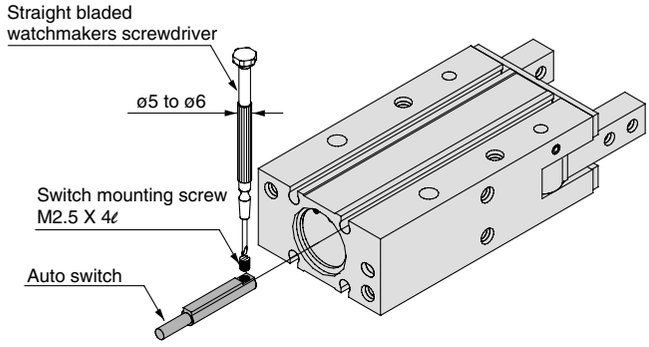

Note) Use a watchmakers screwdrivers with a grip diameter of 5 to 6 mm to tighten the auto switch mounting screw. Use a tightening torque of 0.05 to 0.1Nm. As a rough guide, tighten the screw an additional 90° after feeling a tighten resistance.

Auto Switch Hysteresis

Auto switches have a differential like a micro switch. Please refer to the following table as a guide when setting auto switch positions.

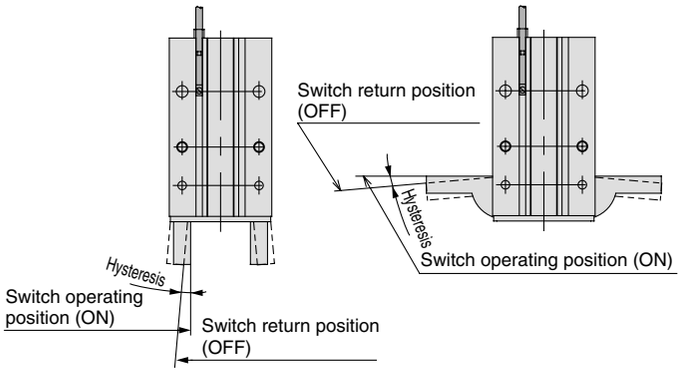

		D-M9N(V) D-M9B(V)	D-M9NW(V)		D-M9BA	
			Red light at ON	Green light at ON	Red light at ON	Green light at ON
MHY2 -10D	Finger fully closed	2°	2°	4°	2°	3°
	Finger fully open	4°	4°	7°	4°	5°
MHY2 -16D	Finger fully closed	2°	2°	4°	2°	2°
	Finger fully open	3°	3°	6°	3°	4°
MHY2 -20D	Finger fully closed	2°	2°	3°	2°	2°
	Finger fully open	3°	3°	5°	3°	3°
MHY2 -25D	Finger fully closed	1°	1°	3°	1°	2°
	Finger fully open	2°	2°	5°	2°	3°

Projection of Auto Switch from Body Edge

The projection of an auto switch from the edge of the body is shown in the table below. Use the table as a guideline for mounting.

Note) 2 color indicator type and perpendicular entry type protrude in the direction of the lead wire entry.



When auto switch D-M9N is used

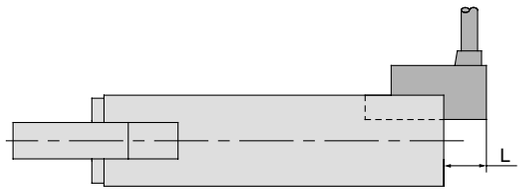

When auto switch D-M9□V is used

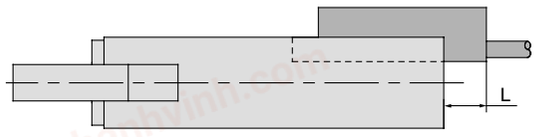

When auto switch D-M9BA is used

Max. protrusion of auto switch from edge of body (L) Unit: mm

Gripper Model No. \ Auto switch model No.		Protrusion						
		In-line				Perpendicular		
		D-M9N	D-M9B	D-M9BA	D-M9NW	D-M9NV	D-M9BV	D-M9NWV
MHY2-10D	O	—	—	—	—	—	—	—
	S	3	8	13	6	1	1	8
MHY2-16D	O	—	—	—	—	—	—	—
	S	3	8	13	7	1	1	8
MHY2-20D	O	—	—	—	—	—	—	—
	S	—	5	10	4	—	—	5
MHY2-25D	O	—	—	—	—	—	—	—
	S	—	3	9	3	—	—	3