chanhvinh.com

Line Filter

FH34/44/54/64 Series

Rated Pressure: 3.5, 7, 14, 21 MPa

RoHS

Compact, solid, and safe design

The case and cover have undergone testing in which they were subjected 100,000 times to impacts equivalent 1.5 times the rated pressure (confirming to MIL standard).

Easy element replacement

The element is extracted from the top, and secured in place by inserting an O-ring seal. The element can be installed and removed easily, simplifying maintenance.

Reliable outlet side

A firm seal is secured through a special configuration combining a pressure clamp from an O-ring around the inner perimeter of the case with support from the cover, and there is no resistance when the cover is installed and removed.

Large drain exhaust port

The large M24 drain exhaust port assures rapid drainage.

Easy fluid flow direction reversal

Simply turn the cover 180° relative to the case mounting base to reverse the fluid flow direction.

Clogging sensor

The filter can be mounted with a differential pressure indicator (reset type).



Specifications

Fluid		Hydraulic fluid	
Operating pressure		Max. 3.5 MPa	Max. 7, 14, 21 MPa
Operating temperature		Max. 80 °C	
Main material	**Cover/Case** Note 1)	Aluminium die-cast (3/8, 1/2, 3/4, 1)	Cast iron
		Aluminium casted (1 1/4, 1 1/2, 2)	
	O-ring	NBR or FKM Note 2)	
Element	**Material**	Paper	
	Nominal filtration	5, 10, 20 μm	
	Differential pressure resistance	0.6 MPa	
Differential pressure indicator operating pressure (Element replacement differential pressure)		0.275 MPa	
Relief valve open pressure		0.35 MPa	

Note 1) There may be scratches, discoloration, slight paint peeling, or other defects which do not affect the product's function or performance.

Note 2) The material of the O-rings and seals differs depending on the hydraulic fluid used. Petroleum, Water-glycol, Emulsion: NBR; Phosphoric ester: FKM

Model/Rated Flow Rate

Operating pressure	Model: Threaded connection	Port size: Threaded Rc	Rated flow rate [l/min]
Max. 3.5 MPa	**FH340-03**	3/8	10
	FH340-04	1/2	20
	FH342-06	3/4	50
	FH342-08	1	80
	FH340-10	1 1/4	120
	FH340-12	1 1/2	160
Max. 7 MPa	**FH440-03**	3/8	10
	FH440-04	1/2	20
	FH440-06	3/4	50
	FH440-08	1	80
	FH440-10	1 1/4	120
	FH440-12	1 1/2	160

Operating pressure	Model: Threaded connection	Port size: Threaded Rc	Rated flow rate [l/min]
Max. 14 MPa	**FH540-03**	3/8	10
	FH540-04	1/2	20
	FH540-06	3/4	50
	FH540-08	1	80
	FH540-10	1 1/4	120
	FH540-12	1 1/2	160
Max. 21 MPa	**FH640-03**	3/8	10
	FH640-04	1/2	20
	FH640-06	3/4	50
	FH640-08	1	80
	FH640-10	1 1/4	120
	FH640-12	1 1/2	160

Note) Tapered female thread connection conforming to JIS B 0203 is compatible.

Accessory/Option

Description	Part no.	Model	Note
Differential pressure indicator	CB-48H	**FH34$^{0}_{1}$** to **FH44$^{0}_{1}$**	Petroleum, Water-glycol, Emulsion
	CB-48H-V		Phosphoric ester
	CB-52H	**FH342**	Petroleum, Water-glycol, Emulsion
	CB-52H-V		Phosphoric ester
	CB-64H	**FH54$^{0}_{1}$** to **FH64$^{0}_{1}$**	Petroleum, Water-glycol, Emulsion
	CB-64H-V		Phosphoric ester
Differential pressure indication switch (N.C. and N.O. common)	CB-49H	**FH34$^{0}_{1}$** to **FH44$^{0}_{1}$**	Petroleum, Water-glycol, Emulsion
	CB-49H-V		Phosphoric ester
	CB-53H	**FH342**	Petroleum, Water-glycol, Emulsion
	CB-53H-V		Phosphoric ester
	CB-65H	**FH54$^{0}_{1}$** to **FH64$^{0}_{1}$**	Petroleum, Water-glycol, Emulsion
	CB-65H-V		Phosphoric ester
Blanking cap (for differential pressure indication part)	AG-9H	**FH340** to **FH640**	Petroleum
	AG-9H-W		Water-glycol, Emulsion
	AG-9H-V		Phosphoric ester
	AG-12H	**FH342**	Petroleum
	AG-12H-W		Water-glycol, Emulsion
	AG-12H-V		Phosphoric ester

chanhvinh.com

FH34/44/54/64 Series

How to Order

FH 3 40 – 03 – 0 0 0 – P 005 L

Hydraulic filter

Operating pressure (Max.)

3	3.5 MPa
4	7 MPa
5	14 MPa
6	21 MPa

Construction/Connection

40	Element upward removal	Threaded
42*		

* Indicates 42 for 3.5 MPa, Port sizes 3/4 and 1.

Port size

Symbol	Threaded Rc
03	3/8
04	1/2
06	3/4
08	1
10	1 1/4
12	1 1/2

Note) For selection from thread, refer to "Model/Rated Flow Rate" on cover page.

Differential pressure indication

0	None
1	Differential pressure indicator
2	Differential pressure indication switch Note)
4*	Differential pressure indicator
5*	Differential pressure indication switch Note)

Note) N.C. and N.O. common
* Construction 42 only

Relief valve

0	With relief valve
1	None

Hydraulic fluid

0	Petroleum	N
1	Water-glycol, Emulsion	W
2	Phosphoric ester	V

Note) N, W and V refer to the hydraulic fluid symbol indicated at the end of the element part number.

Nominal filtration

005	5 μm
010	10 μm
020	20 μm

Note) The paper elements for water-glycol or emulsion is 10 μm only.

Element

P	Paper
M*	Micromesh

* The micromesh element is a made to order specification (X0).

Fluid direction

—	IN left
L	IN right

Made to Order

—	None (Standard)
X0	Micromesh element equipped

Replacement Element Part No. (Including O-ring for element)

Port size	5 μm	10 μm	20 μm	Element size
03 (3/8B), **04** (1/2B)	EP910-005N	EP910-010N	EP910-020N	Ø 55 x 90
06 (3/4B), **08** (1B)	EP020-005N	EP020-010N	EP020-020N	Ø 74 x 117
10 (1 1/4B), **12** (1 1/2B)	EP120-005N	EP120-010N	EP120-020N	Ø 74 x 195

Note 1) The symbol at the end of the element part no. indicates the hydraulic fluid type. N: Petroleum, V: Phosphoric ester, W: Water-glycol, Emulsion (10 μm only)
Note 2) Above elements require one element per filter.

Construction/Seal List

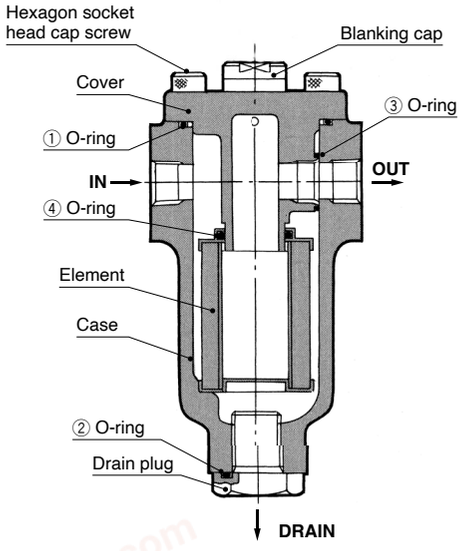

Differential pressure indicator

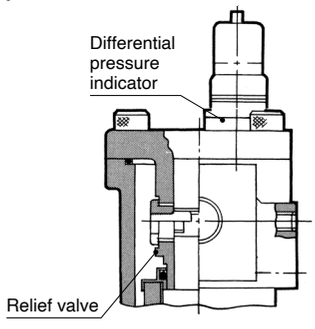

Replacement O-ring/Seal List (One each of the seal and O-ring types listed below are required per filter.)

Applicable hydraulic fluid	Port size	Applicable hydraulic fluid	Material	① O-ring order no. (Nominal size)	② O-ring order no. (Nominal size)	Material	③ O-ring order no. (Nominal size)	④ O-ring order no. (Nominal size)
FH340	03 to 04	Petroleum, Water-glycol, Emulsion	NBR-90	KA00617 (G80)	KA00630	NBR-70-1	KA00468 (P22A)	KA00471 (P30)
FH34□	06 to 08			KA00611 (G105)			KA00079 (P32)	KA00082 (P44)
FH44□ to 64□	03 to 04			KA00615 (G65)			KA00074 (P20)	KA00471 (P30)
FH44□ to 64□	06 to 08			KA00618			KA00079 (P32)	KA00082
FH34□ to 64□	10 to 12			(G90)	(P28)		KA00803 (P40)	(P44)
FH340	03 to 04	Phosphoric ester	FKM-90	KA01296M (G80)	KA00631M	FKM-70	KA00713 (P22A)	KA00104 (P30)
FH34□	06 to 08			KA02476 (G105)			KA00720 (P32)	KA00107 (P44)
FH44□ to 64□	03 to 04			KA01759 (G65)			KA00102 (P20)	KA00104 (P30)
FH44□ to 64□	06 to 08			KA02477			KA00720 (P32)	KA00107
FH34□ to 64□	10 to 12			(G90)	(P28)		KA00722 (P40)	(P44)

Note) The material and nominal size notations are based on JISB2401.

chanhvinh.com

Flow Rate Characteristics

FH34/44 Series

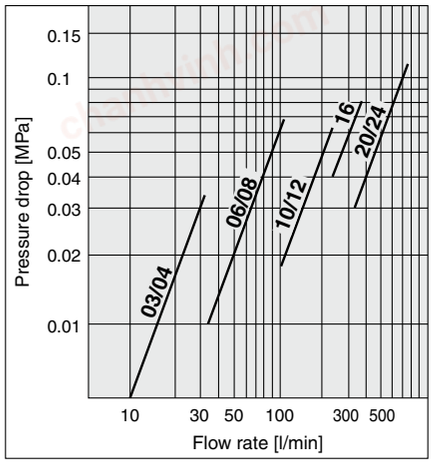

Conditions
Fluid: Turbine oil Class 2 VG56
Measured pressure: 3.5, 7 MPa
Viscosity: 45 mm²/s
Filter material: Paper
Nominal filtration: 10 μm

FH54 Series

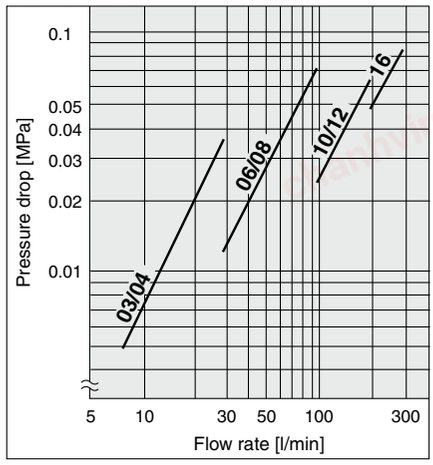

Conditions
Fluid: Turbine oil Class 2 VG56
Measured pressure: 14 MPa
Viscosity: 45 mm²/s
Filter material: Paper
Nominal filtration: 10 μm

FH64 Series

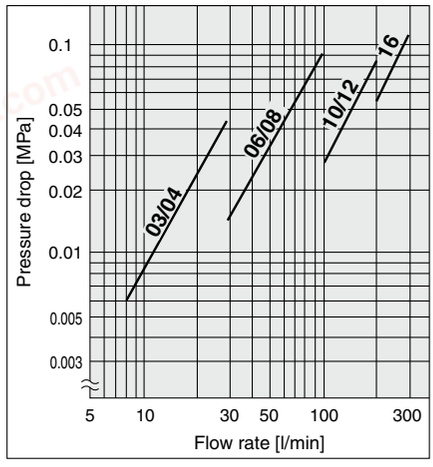

Conditions
Fluid: Turbine oil Class 2 VG56
Measured pressure: 21 MPa
Viscosity: 45 mm²/s
Filter material: Paper
Nominal filtration: 10 μm

Handling Precautions

① Mounting

- Confirm INLET and OUTLET before mounting. Then connect so that the drain is oriented downward. For maintenance, make sure to provide sufficient space above the filter for removing the element.

② Operation

- The hydraulic fluid used becomes high viscosity when the temperature is low during the winter, etc., and the differential pressure indicator. If this occurs, wait until the oil temperature rises by a warm-up operation, then check if this is caused by clogging.
- Once the differential pressure indicator is actuated, the indication continues to be displayed until the indicator is reset (by depressing the reset button), even if the pump stops operating.
  Reset after replacing the element and restarting operation, or after normal operation starts in cold weather such as during winter.

③ Element replacement

- When the pressure difference reaches 0.275 MPa during operation (actuating the differential pressure indicator), stop operation, drain the oil from the case, and replace the element.
- When replacing the element, check the O-rings and replace them if they are damaged.
- When installing and removing an element, do not scratch or damage it by touching the corners of the case, etc.

④ Others

- For the top cover O-ring, use a product of hardness 90 to prevent leaks or damage.
- If there is back pressure, install a check valve on the outlet side to prevent damage to the element.
- Turn the top cover 180° to reverse the oil flow direction.
- Use an auxiliary pipe or the like and apply force evenly when tightening the hexagon socket head cap screws on the cover and case.

Differential Pressure Indication

Two indication methods are available: differential pressure indicator and differential pressure indication switch. These can be mounted on all filter models.

■ Differential pressure indicator

- Operating pressure—0.275 MPa
- Once a value is displayed, it will continue to be displayed until reset, even if the pump is stopped. (Reset type)
- Perform element replacement when the red ring floats up and covers the entire view port.

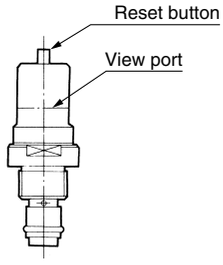

chanhvinh.com

FH34/44/54/64 Series

Dimensions

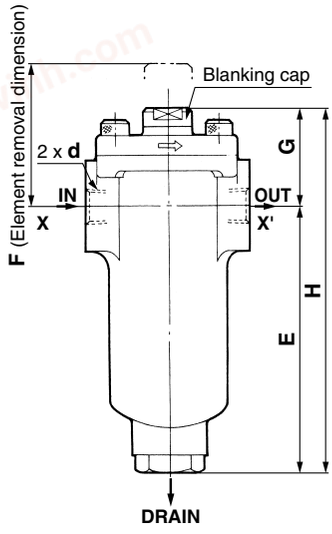

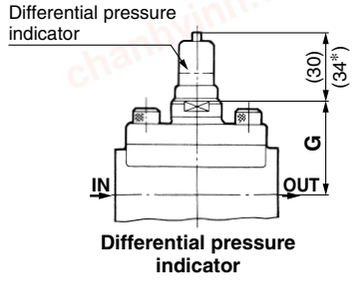

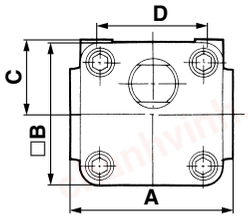

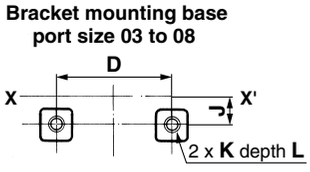

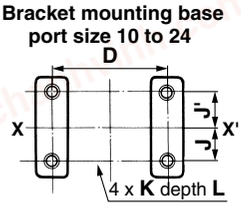

(*): Internal dimensions for FH342 type

[mm]

Model	d Threaded Rc	A	B	C	D	E	F	G	H	J	J'	K	L	Weight (kg)
FH340-03	3/8	105	96	50	80	156	275	57	213	5	—	2 x M8 x 1.25	19	1.8
FH340-04	1/2													
FH342-06	3/4	136	120	65	60	175	340	61	236	0	—	2 x M10 x 1.5	15	2.5
FH342-08	1													
FH340-10	1 1/4	150	106	56	100	255	435	87	342	50	0	4 x M10 x 1.5	23	4.6
FH340-12	1 1/2													
FH440-03	3/8	100	80	45	60	157	285	62	219	0	—	2 x M8 x 1.25	14	4.5
FH440-04	1/2													
FH440-06	3/4	135	108	57	80	177	330	73	250	0	—	2 x M10 x 1.5	18	8.7
FH440-08	1													
FH440-10	1 1/4	150	105	57	80	255	435	87	342	50	0	4 x M10 x 1.5	18	12.2
FH440-12	1 1/2													
FH540-03	3/8	105	86	45	70	147	285	62	209	0	—	2 x M8 x 1.25	14	5.2
FH540-04	1/2													
FH540-06	3/4	145	108	56	100	177	330	73	250	0	—	2 x M10 x 1.5	18	9.7
FH540-08	1													
FH540-10	1 1/4	150	108	56	100	255	435	87	342	50	0	4 x M12 x 1.75	22	12.8
FH540-12	1 1/2													
FH640-03	3/8	120	98	51	90	147	285	62	209	0	—	2 x M10 x 1.5	18	6.9
FH640-04	1/2													
FH640-06	3/4	155	124	65	120	177	330	73	250	0	—	2 x M10 x 1.5	18	12.9
FH640-08	1													
FH640-10	1 1/4	180	124	65	125	255	435	87	342	50	0	4 x M12 x 1.75	22	19.8
FH640-12	1 1/2													

Note) Tapered female thread conforming to JIS B 0203 is compatible.

chanhvinh.com

⚠ Safety Instructions

These safety instructions are intended to prevent hazardous situations and/or equipment damage. These instructions indicate the level of potential hazard with the labels of **"Caution," "Warning"** or **"Danger."** They are all important notes for safety and must be followed in addition to International Standards (ISO/IEC) [1], and other safety regulations.

⚠ **Danger:**	**Danger** indicates a hazard with a high level of risk which, if not avoided, will result in death or serious injury.
⚠ **Warning:**	**Warning** indicates a hazard with a medium level of risk which, if not avoided, could result in death or serious injury.
⚠ **Caution:**	**Caution** indicates a hazard with a low level of risk which, if not avoided, could result in minor or moderate injury.

1) ISO 4414: Pneumatic fluid power – General rules and safety requirements for systems and their components.
ISO 4413: Hydraulic fluid power – General rules and safety requirements for systems and their components.
IEC 60204-1: Safety of machinery – Electrical equipment of machines. (Part 1: General requirements)
ISO 10218-1: Robots and robotic devices - Safety requirements for industrial robots - Part 1: Robots.
etc.

⚠ Warning

1. The compatibility of the product is the responsibility of the person who designs the equipment or decides its specifications.
Since the product specified here is used under various operating conditions, its compatibility with specific equipment must be decided by the person who designs the equipment or decides its specifications based on necessary analysis and test results. The expected performance and safety assurance of the equipment will be the responsibility of the person who has determined its compatibility with the product. This person should also continuously review all specifications of the product referring to its latest catalogue information, with a view to giving due consideration to any possibility of equipment failure when configuring the equipment.

2. Only personnel with appropriate training should operate machinery and equipment.
The product specified here may become unsafe if handled incorrectly. The assembly, operation and maintenance of machines or equipment including our products must be performed by an operator who is appropriately trained and experienced.

3. Do not service or attempt to remove product and machinery/ equipment until safety is confirmed.
1. The inspection and maintenance of machinery/equipment should only be performed after measures to prevent falling or runaway of the driven objects have been confirmed.
2. When the product is to be removed, confirm that the safety measures as mentioned above are implemented and the power from any appropriate source is cut, and read and understand the specific product precautions of all relevant products carefully.
3. Before machinery/equipment is restarted, take measures to prevent unexpected operation and malfunction.

4. Our products cannot be used beyond their specifications.
Our products are not developed, designed, and manufactured to be used under the following conditions or environments.
Use under such conditions or environments is not covered.
1. Conditions and environments outside of the given specifications, or use outdoors or in a place exposed to direct sunlight.
2. Use for nuclear power, railways, aviation, space equipment, ships, vehicles, military application, equipment affecting human life, body, and property, fuel equipment, entertainment equipment, emergency shut-off circuits, press clutches, brake circuits, safety equipment, etc., and use for applications that do not conform to standard specifications such as catalogues and operation manuals.
3. Use for interlock circuits, except for use with double interlock such as installing a mechanical protection function in case of failure. Please periodically inspect the product to confirm that the product is operating properly.

⚠ Caution

We develop, design, and manufacture our products to be used for automatic control equipment, and provide them for peaceful use in manufacturing industries.
Use in non-manufacturing industries is not covered.
Products we manufacture and sell cannot be used for the purpose of transactions or certification specified in the Measurement Act.
The new Measurement Act prohibits use of any unit other than SI units in Japan.

Limited warranty and Disclaimer/Compliance Requirements

The product used is subject to the following "Limited warranty and Disclaimer" and "Compliance Requirements".Read and accept them before using the product.

Limited warranty and Disclaimer

1. The warranty period of the product is 1 year in service or 1.5 years after the product is delivered, whichever is first. [2] Also, the product may have specified durability, running distance or replacement parts. Please consult your nearest sales branch.
2. For any failure or damage reported within the warranty period which is clearly our responsibility, a replacement product or necessary parts will be provided. This limited warranty applies only to our product independently, and not to any other damage incurred due to the failure of the product.
3. Prior to using SMC products, please read and understand the warranty terms and disclaimers noted in the specified catalogue for the particular products.

2) Vacuum pads are excluded from this 1 year warranty.
A vacuum pad is a consumable part, so it is warranted for a year after it is delivered. Also, even within the warranty period, the wear of a product due to the use of the vacuum pad or failure due to the deterioration of rubber material are not covered by the limited warranty.

Compliance Requirements

1. The use of SMC products with production equipment for the manufacture of weapons of mass destruction (WMD) or any other weapon is strictly prohibited.
2. The exports of SMC products or technology from one country to another are governed by the relevant security laws and regulations of the countries involved in the transaction. Prior to the shipment of a SMC product to another country, assure that all local rules governing that export are known and followed.

chanhvinh.com

SMC Corporation (Europe)

Austria	+43 (0)2262622800	www.smc.at	office@smc.at
Belgium	+32 (0)33551464	www.smc.be	info@smc.be
Bulgaria	+359 (0)2807670	www.smc.bg	office@smc.bg
Croatia	+385 (0)13707288	www.smc.hr	office@smc.hr
Czech Republic	+420 541424611	www.smc.cz	office@smc.cz
Denmark	+45 70252900	www.smcdk.com	smc@smcdk.com
Estonia	+372 651 0370	www.smcee.ee	info@smcee.ee
Finland	+358 207513513	www.smc.fi	smcfi@smc.fi
France	+33 (0)164761000	www.smc-france.fr	supportclient@smc-france.fr
Germany	+49 (0)61034020	www.smc.de	info@smc.de
Greece	+30 210 2717265	www.smchellas.gr	sales@smchellas.gr
Hungary	+36 23513000	www.smc.hu	office@smc.hu
Ireland	+353 (0)14039000	www.smcautomation.ie	sales@smcautomation.ie
Italy	+39 03990691	www.smcitalia.it	mailbox@smcitalia.it
Latvia	+371 67817700	www.smc.lv	info@smc.lv
Lithuania	+370 5 2308118	www.smclt.lt	info@smclt.lt
Netherlands	+31 (0)205318888	www.smc.nl	info@smc.nl
Norway	+47 67129020	www.smc-norge.no	post@smc-norge.no
Poland	+48 222119600	www.smc.pl	sales@smc.pl
Portugal	+351 214724500	www.smc.eu	apoioclientept@smc.smces.es
Romania	+40 213205111	www.smcromania.ro	smcromania@smcromania.ro
Russia	+7 (812)3036600	www.smc.eu	sales@smcru.com
Slovakia	+421 (0)413213212	www.smc.sk	office@smc.sk
Slovenia	+386 (0)73885412	www.smc.si	office@smc.si
Spain	+34 945184100	www.smc.eu	post@smc.smces.es
Sweden	+46 (0)86031240	www.smc.nu	smc@smc.nu
Switzerland	+41 (0)523963131	www.smc.ch	info@smc.ch
Turkey	+90 212 489 0 440	www.smcturkey.com.tr	info@smcturkey.com.tr
UK	+44 (0)845 121 5122	www.smc.uk	sales@smc.uk
South Africa	+27 10 900 1233	www.smcza.co.za	zasales@smcza.co.za

Printing CS 00 Printed in Spain

Specifications are subject to change without prior notice and any obligation on the part of the manufacturer