chanhvinh.com

Quick Change Filter

Filter for Cleaning Solvent
Quick Change Filter

Series FQ1



No tools required. Takes only 60 seconds for element replacement.

chanhvinh.com

Element replacement in only 60 seconds

Replacement in less than two minutes is possible including removal of liquid.

Removing liquid ..... 45 seconds

Removing the case
Replacing the element
Installing the case
..... 51 seconds



PATENT PENDING

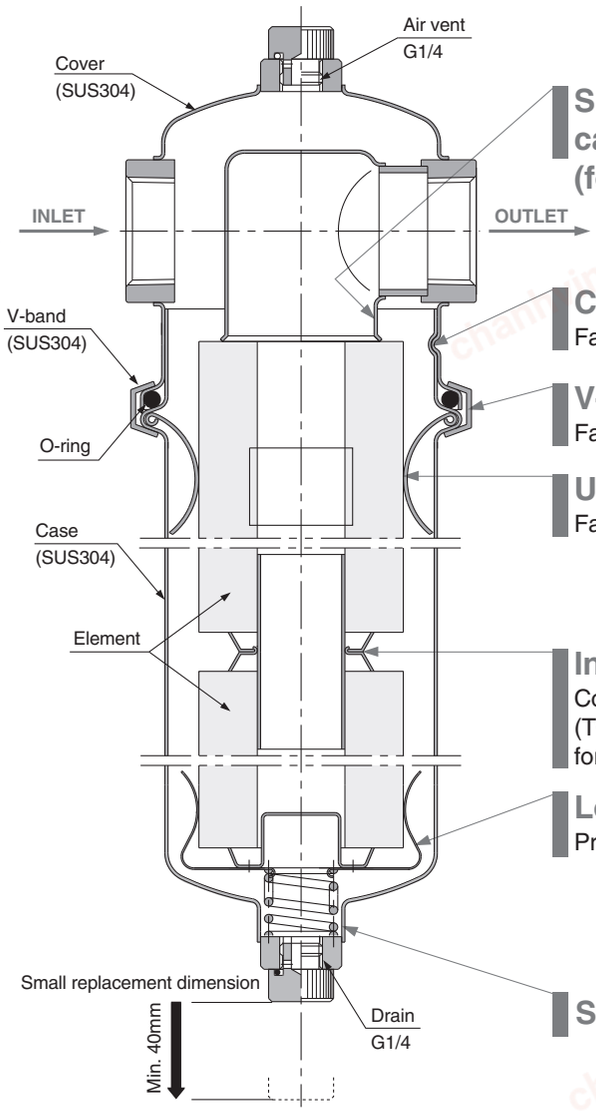

S.O.E. (Single Open Element) can be installed. (for made to order products)

Case holding mechanism
Facilitates element replacement.

V-band holding mechanism
Facilitates V-band fastening.

Upper element holder
Facilitates centering of the element.

Intermediate element holder
Connects upper and lower elements securely. (Two L250 elements substitute for one L500 element.)

Lower element holder
Prevents the element from tilting.

Smooth drainage of liquid

chanhvinh.com

Quick Change Filter

Series FQ1

No tools required, easy element replacement

Removing the element

1. Stop liquid flowing into the filter. (If there are valves before and after the filter, close these valves.)
2. Release pressure inside the filter completely by loosening the air vent plug.
3. Discharge fluid inside the filter by removing the drain plug.
4. Remove the stopper from the retainer by loosening the wing bolt on the V-band.

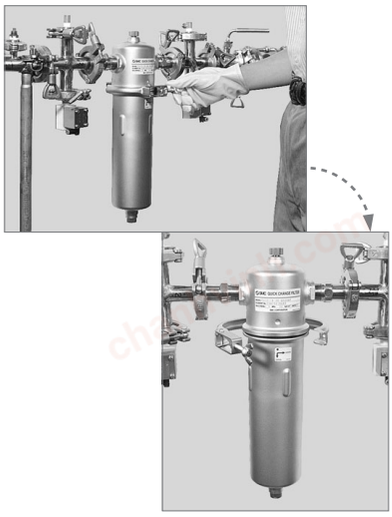

5. To extract the element from the case, rotate the case counterclockwise about 20 degrees until it stops, then lower it by about 40mm and remove it from the cover.

   Note) When two L250 elements are used, do not discard the intermediate holder and lower element holder attached under the element, since they are reused.

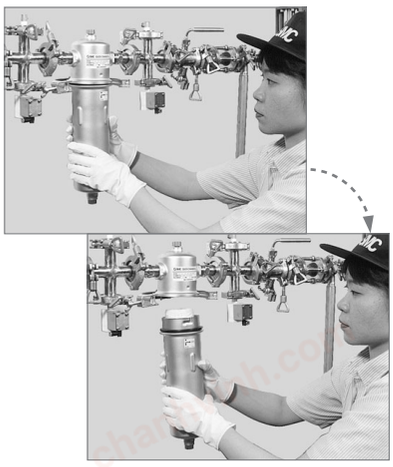

6. Clean the inside of the case, gaskets, seals, holders, plugs, etc., with a pure fluid or solvent.

Installing the element

1. Make sure that O-rings are not damaged or deformed. If needed, replace with new ones.
2. Set the lower element holder under the element, and place them in the case.

   [When using two L250 elements]
   Insert the intermediate holder into the lower part of the second element (upper level), and then place them into the case after inserting one side of the intermediate holder into the upper part of the element that is attached to the lower holder.

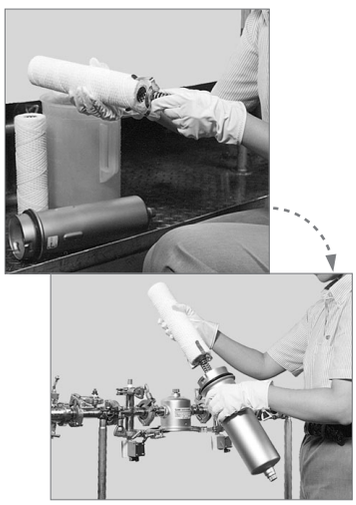

3. Align the indentations of the case with the projections of the cover, lift the case upward by about 10mm and rotate it clockwise about 20 degrees.
4. Mount it in such a way that the entire flanged perimeter of the cover and case are held by the retainer of the V-band.

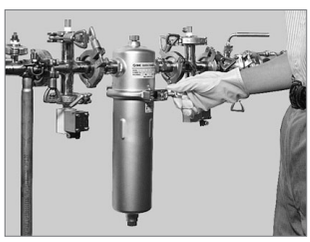

5. Set the stopper on the retainer while holding down the V-band outside perimeter, and then tighten the wing bolt to the prescribed position.
6. Tighten the drain plug.
7. When air release is completed, tighten the air vent plug.

Filter Housings

FQ1010
Element size
L125 (125mm)



FQ1011
Element size
L250 (250mm)



FQ1012
Element size
L500 (500mm)



Filter Elements

(Standard elements)

Fibre element

- Nominal filtration accuracy: 0.5 to 100µm
- Ideal for a relatively high level of impurities
- Ideal for use as a prefilter
- Material: PP (EHM)
  Cotton (EH)



Micromesh element

- Nominal filtration accuracy: 5 to 105µm
- High filtration accuracy with stainless steel micromesh
- Pleated type provides three times more filtration area than a cylinder.
- Easy element cleaning and regeneration
- Material: SUS304 (EM100, EM200)
  SUS316 (EM500, EM600)



(Made to order elements)

HEPO II element

- Absolute filtration accuracy: 2 to 13µm
- US FDA compatible
- Nonwoven fabric element with high filtration accuracy of more than 99% removal and without fiber outflow and release of chemical components
- Material: PP (EJ102S ... x 0)



PP depth element

- Nominal filtration accuracy: 1 to 75µm
- Material: PP
  EJ202S ... x 11 (L125)
  EJ302S ... x 11 (L250)
  EJ402S ... x 11 (L500)



Membrane element

- Absolute filtration accuracy: 0.2, 0.4µm
- Material: PP (ED102S ... x 0)
  CA (ED111S ... x 0)

Note) PP: Poly propylene



chanhvinh.com

Series FQ1
Model Selection

Selecting the Element and Housing

1 Selecting the element

According to the type and the cleaning level of a cleaning solvent, select corresponding element and seal types by referring to the "Standard Element Fluid Compatibility" table on the right.

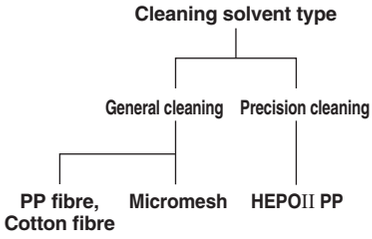

- Specifications: Select desired temperature conditions and filtration accuracy from the "Standard Element Selection Guide" on the right.

2 Calculating the number of elements

- Verify the recommended flow rate of the selected element with the "Standard Element Selection Guide".
- Find a value for the formula, Necessary flow rate Recommended flow rate, rounding up to the nearest whole number. The value obtained is the number of necessary elements (equivalent to L250).

3 Selecting the housing

Select a housing type to hold the elements selected in 2.

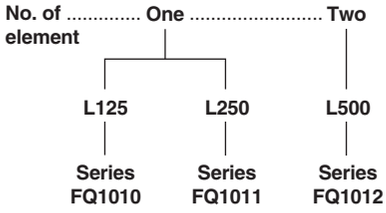

* Consult SMC if the number of elements calculated in 2 exceeds two.
- Make sure whether the operating temperature range, pressure and cleaning solvent type meet the specifications.

4 Determining the filter model

Determine the filter model from the element type and the number of elements selected in 1 and 2, and the housing type selected in 3, referring to "How to Order".

Standard Element Fluid Compatibility

Cleaning level and Element / Cleaning solvent type		Cleaning level	General cleaning				Precision cleaning	Applicable seal material and cleaning solvent	
			Nominal filtration accuracy 105µm ´ 0.5µm				Absolute filtration accuracy 13µm ´ 2µm		
		Name	Fiber element	Fiber element	Micro-mesh element	Micro-mesh element	HEPO II element	Nitrile rubber	Fluoro rubber
		Material	PP	Cotton	SUS304	SUS316	PP	NBR	FPM
		Element part no.	EHM ... x 3	EH	EM	EM	EJ		
		Element symbol	Q	H	M	L	R		
Water	Potable water		Suitable	Optimal	Optimal	Suitable	Optimal	Optimal	Suitable
	Industrial water		Optimal	Suitable	Optimal	Suitable	Unsuitable	Optimal	Suitable
	Distilled water		Unsuitable	Unsuitable	Unsuitable	Unsuitable	Optimal	Optimal	Suitable
	Ion exchange water		Unsuitable	Unsuitable	Unsuitable	Unsuitable	Optimal	Optimal	Suitable
	Pure water, Ultrapure water		Unsuitable	Unsuitable	Unsuitable	Unsuitable	Optimal	Optimal	Suitable
Petroleum	Gas oil, Kerosene		Optimal	Suitable	Suitable	Optimal	Optimal	Optimal	Suitable
	Xylene		Unsuitable	Optimal	Unsuitable	Optimal	Unsuitable	Unsuitable	Optimal
Alkali	Ammonia		Optimal	Unsuitable	Optimal	Suitable	Optimal	Optimal	Unsuitable
	Sodium hydroxde		Optimal	△Note)	Optimal	Suitable	Optimal	Optimal	Unsuitable
Chlorine, Fluorine	Trichlorethylene		Unsuitable	Optimal	Unsuitable	Optimal	Unsuitable	Unsuitable	Optimal
	Methylene chloride		Unsuitable	Optimal	Unsuitable	Optimal	Unsuitable	Unsuitable	Optimal
Alcohol	Isopropyl alcohol (IPA)		Optimal	Suitable	Optimal	Suitable	Optimal	Suitable	Optimal

* For detailed element specifications, refer to the applicable element symbol in the "Standard Element Selection Guide" below. Furthermore, consult SMC for other fluids.

Note) △: Can be used at low temperatures and low concentration.

Made to Order

■ PP depth element EJ
- General cleaning
- Nominal filtration accuracy: 1 to 75µm
- Water, alkali, or alcohol bases

■ Membrane element ED
- Precision cleaning
- Absolute filtration accuracy: 0.2, 0.4µm
- Water, alkali, or alcohol bases

Standard Element Selection Guide

Cleaning level	Name	Element symbol	Material	Element part no.	Temperature range (C)	Filtration accuracy (µm)	Recommended flow rate (ℓ/min) Pressure loss: 0.01 to 0.02MPa Fluid: Water equiv.	Differential pressure resistance (MPa)
General cleaning	Fiber element	Q	PP	EHM	0 to 100	(Nominal) 0.5, 1, 5, 10, 20, 50, 75, 100	5, 15, 25, 30	0.2
		H	Cotton	EH				
	Micro-mesh element	M	SUS304	EM1, 2	0 to 100	(Nominal) 5, 10, 20, 40, 74, 105	25, 30	0.7
		L	SUS316	EM5, 6	0 to 250			
Precision cleaning	HEPO II element	R	PP	EJ	0 to 80	(Absolute) 2, 4, 6, 13	30	0.5

chanhvinh.com

Quick Change Filter
Series FQ1

RoHS

How to Order

FQ1 0 1 0 N – 04 – M005N – B

Model symbol (In-line filters)

Housing material

Symbol	Cover	Case
0	Stainless steel 304	Stainless steel 304

Element sealing method

1	Flat gasket (Double, Open, End)

Element size

Symbol	Element size
0	L125
1	L250
2	L500 (L250 x 2 pcs.)

Housing O-ring material

Symbol	Material
N	NBR
V	FKM

Port size

Symbol	Port size	Applicable model		
		FQ1010	FQ1011	FQ1012
04	Rc 1/2	●	●	
06	Rc 3/4	●	●	●
10	Rc 1		●	●

Element type
Select from tables below and page 4.6-1

Options

—	N/A
B	Bracket

Made to order specifications

—	Note
X19	Without V-band Supprt (details on page 4.6-9)
X61	Cover with Bracket seal (details on page 4.6-9)
X68	Chemical Resistant Type (details on page 4.6-9)

∗ For other made to order specifications, refer to page 4.6-9.



FQ1010□ FQ1011□ FQ1012□

Element and Seal Part Numbers

1. Fiber element (P.P.)

Dimensions	Element symbol	Nominal filtration accuracy (µm)	Part number
ø65 x L250	TX50	0.5	EHM10A
	T001	1	EHM39R10AY
	T005	5	EHM23R10AY
	T010	10	EHM19R10AY
	T020	20	EHM15R10A
	T050	50	EHM11R10A
	T075	75	EHM10R10A
	T100	100	EHM8R10A

2. Fiber element (Cotton)

Dimensions	Element symbol	Nominal filtration accuracy (µm)	Part number
ø65 x L250	HX50	0.5	EH10G
	H001	1	EH39R10GV
	H005	5	EH23R10GV
	H010	10	EH19R10GV
	H020	20	EH15R10G
	H050	50	EH11R10G
	H075	75	EH10R10G
	H100	100	EH8R10G

3. Micromesh element (Stainless steel 304) Bonding material: Epoxy resin

Dimensions	Element symbol	Nominal filtration accuracy (µm)	Part number
ø65 x L250	M005□	5	EM100-005□
	M010□	10	EM100-010□
	M020□	20	EM100-020□
	M040□	40	EM100-040□
	M074□	74	EM100-074□
	M105□	105	EM100-105□
ø65 x L125	M005□	5	EM200-005□X4
	M010□	10	EM200-010□X4
	M020□	20	EM200-020□X4
	M040□	40	EM200-040□X4
	M074□	74	EM200-074□X4
	M105□	105	EM200-105□X4

Note) Specity seal material in place of "□" (N for NBR or V for FKM).

4. Micromesh element (Stainless steel 316)

Dimensions	Element symbol	Nominal filtration accuracy (µm)	Part number
ø65 x L250	L005□	5	EM500-005□
	L010□	10	EM500-010□
	L020□	20	EM500-020□
	L040□	40	EM500-040□
	L074□	74	EM500-074□
	L105□	105	EM500-105□
ø65 x L125	L005□	5	EM600-005□X4
	L010□	10	EM600-010□X4
	L020□	20	EM600-020□X4
	L040□	40	EM600-040□X4
	L074□	74	EM600-074□X4
	L105□	105	EM600-105□X4

Note) Specity seal material in place of "□" (N for NBR or V for FKM).

Made to Order

Made to order specifications

Elements other than 1 to 4 listed above are also available.
Refer to "Made to Order" elements on pages 4.6.9 to 4.6.11 for details.

chanhvinh.com

Series FQ1

RoHS



Specifications

Model		FQ1010	FQ1011	FQ1012
No.of built-in elements (L: Element length in mm)		1 (L125)	1 (L250)	2 (L250 x 2)
Operating pressure		Maximum 1 MPa		
Operating temperature		Maximum 80°C (Not exceeding boiling point)		
Applicable fluids		Industrial water, weak alkali cleaning fluids etc., ∗ Can not be used for gases.		
Port size (Rc)		1/2, 3/4	1/2, 3/4, 1	3/4, 1
Material	Housing	Stainless steel 304		
	Seal	NBR or FKM		
Weight (kg)		Approx. 1.5	Approx. 1.9	Approx. 2.7
Internal capacity (L)		Approx. 1	Approx. 1.7	Approx. 3.1

Note) For FQ1010, only micromesh elements and PP depth elements are used.
For details, refer to the pages on element series.

Flow Characteristics

Fibre element (PP): FQ1011N-06-T Symbol

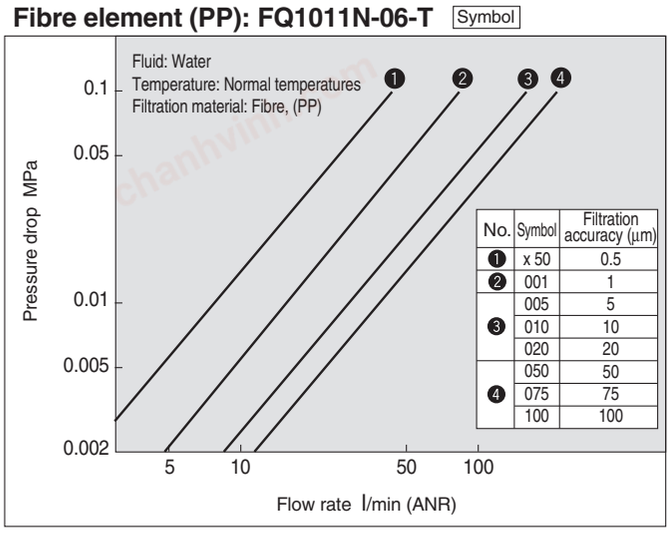

No.	Symbol	Filtration accuracy (μm)
1	x 50	0.5
2	001	1
3	005	5
	010	10
	020	20
4	050	50
	075	75
	100	100

Micromesh element: FQ1011N-06 L M Symbol

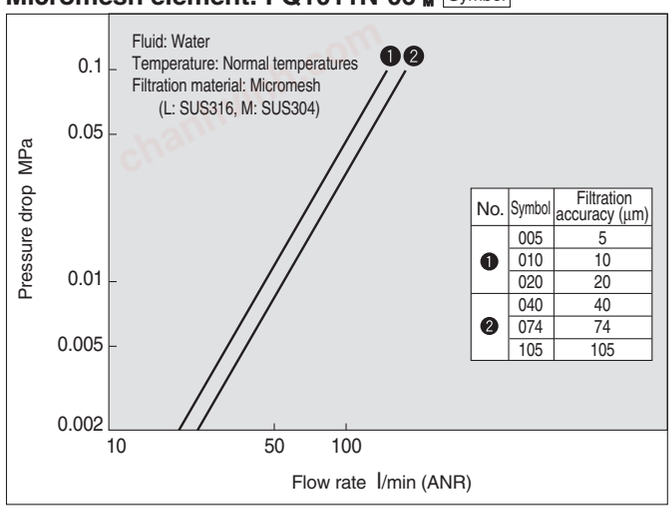

No.	Symbol	Filtration accuracy (μm)
1	005	5
	010	10
	020	20
2	040	40
	074	74
	105	105

Fibre element (Cotton): FQ1011N-06-H Symbol

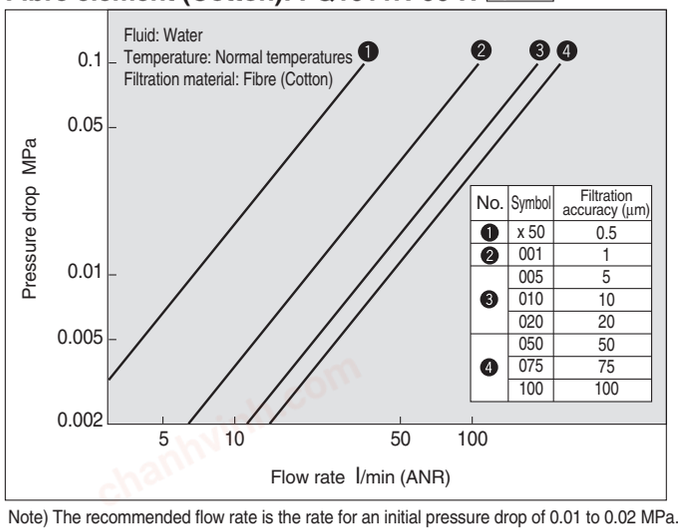

No.	Symbol	Filtration accuracy (μm)
1	x 50	0.5
2	001	1
3	005	5
	010	10
	020	20
4	050	50
	075	75
	100	100

HEPO II element (PP): FQ1011N-06-R Symbol

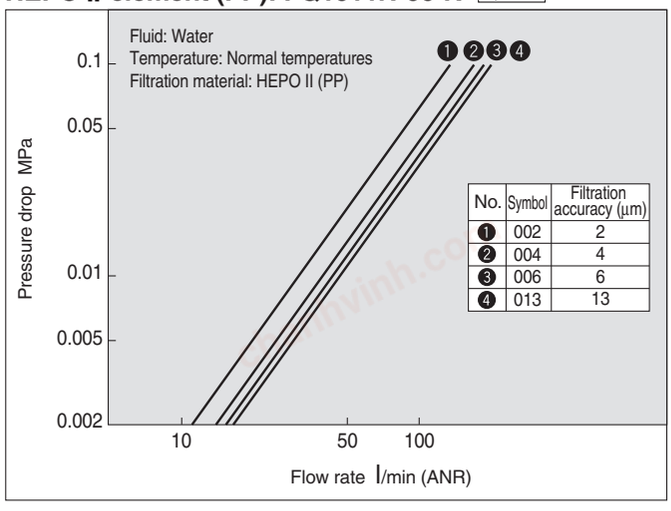

No.	Symbol	Filtration accuracy (μm)
1	002	2
2	004	4
3	006	6
4	013	13

Note) The recommended flow rate is the rate for an initial pressure drop of 0.01 to 0.02 MPa.

chanhvinh.com

Construction

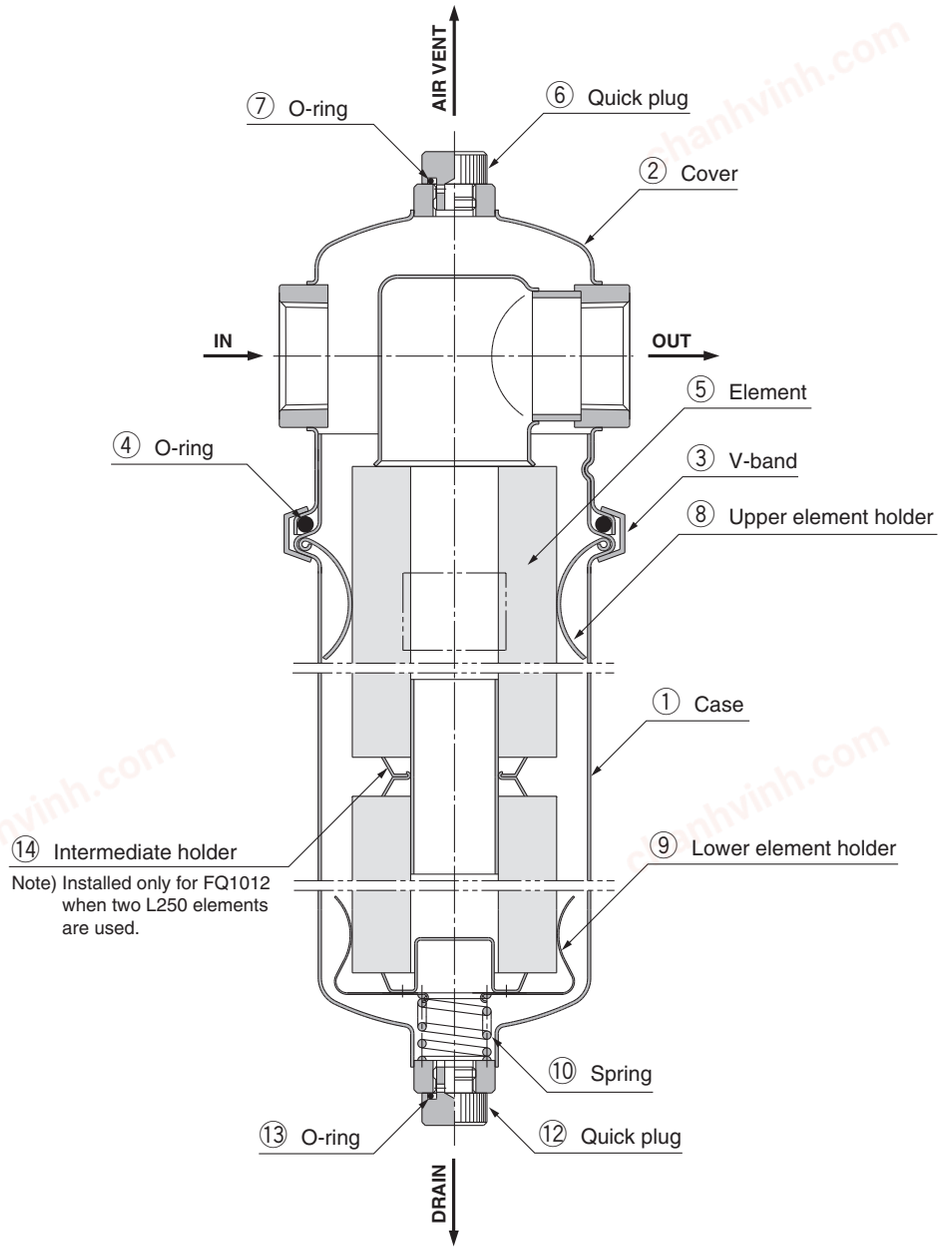

Replacement Parts

Description	Part number	Material	Applicable model	Part no. (Set contents)	Note
Case assembly	**FQ1-CA001N**	Stainless steel 304 Note) O-ring material N: NBR V: FKM	FQ1010N	①, ⑧, ⑨, ⑩, ⑫, ⑬: 1 pc. each Note) Only the FQ1-CA003□ includes ⑭ intermediate holder in the set.	Element size: L125
	FQ1-CA001V		FQ1010V		
	FQ1-CA002N		FQ1011N		Element size: L250
	FQ1-CA002V		FQ1011V		
	FQ1-CA003N		FQ1012N		Element size: L500 (L250 x 2)
	FQ1-CA003V		FQ1012V		
V-band for replacement	**FQ-BA001**	Stainless steel 304	Series FQ1	③	
O-ring kit	**FQ-KT005N**	NBR	FQ101□N	④, ⑦, ⑬: 1 pc. each	④: OR NBR-70-1 P85 ⑦, ⑬: OR NBR-70-1 P11
	FQ-KT005V	FKM	FQ101□V		④: OR FKM-70 P85 ⑦, ⑬: OR FKM-70 P11
Quick plug	**AG-9S**	Stainless steel 304	Series FQ1	⑥, ⑫	
Upper element holder	**L-131S**	Stainless steel 304	Series FQ1	⑧	
Lower element holder	**L-135S**	Stainless steel 304	Series FQ1	⑨, ⑩	
Intermediate holder	**FQ-OP001**	Stainless steel 304	Series FQ1	⑭	
Bracket	**BP-15S**	SPC	FQ101□□-04		For port size Rc 1/2
	BP-14S		FQ101□□-06		For port size Rc 3/4
	BP-13S		FQ101□□-10		For port size Rc 1

chanhvinh.com

Series FQ1

Dimensions

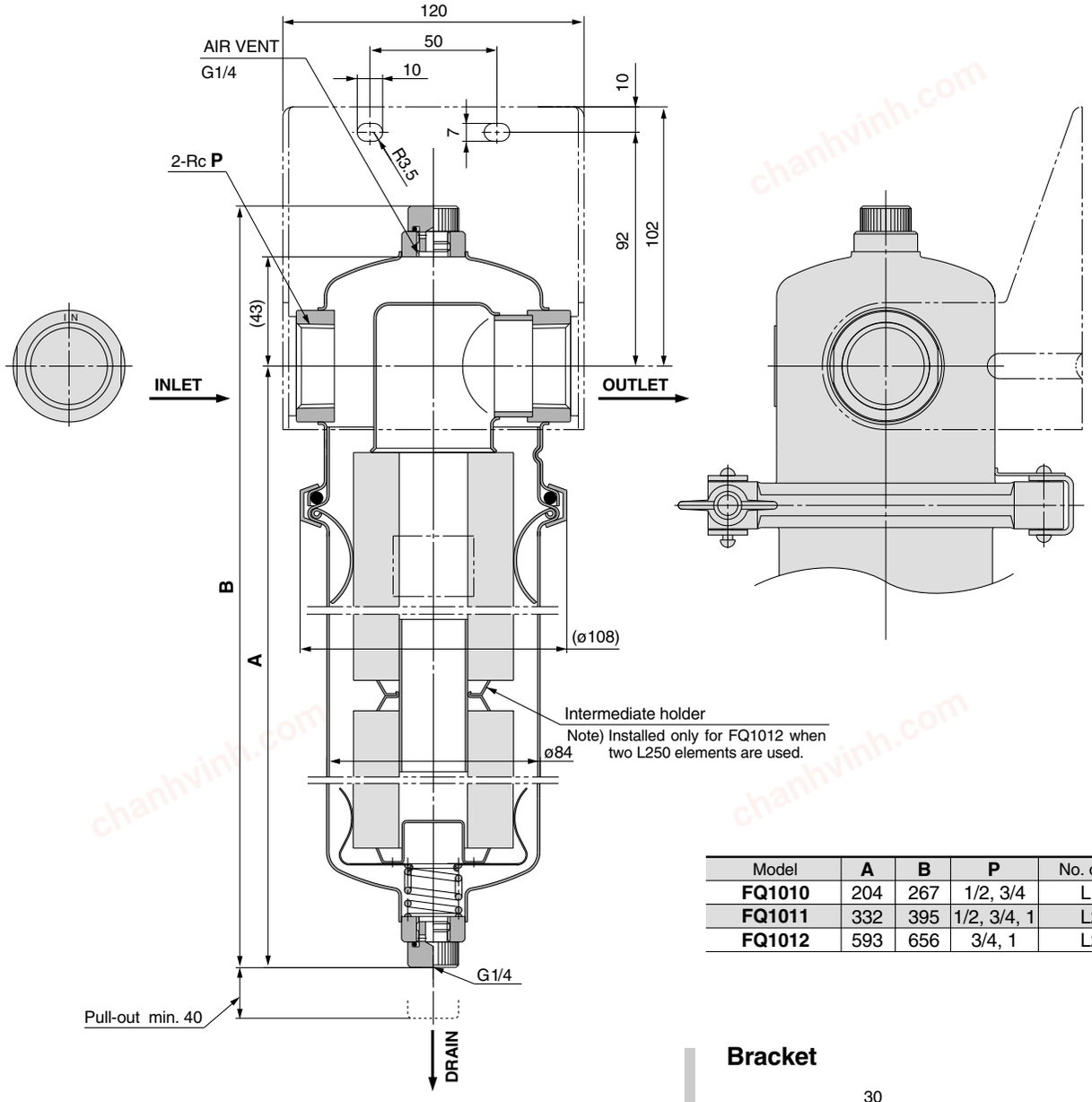

Model	A	B	P	No. of elements
FQ1010	204	267	1/2, 3/4	L125 x 1
FQ1011	332	395	1/2, 3/4, 1	L250 x 1
FQ1012	593	656	3/4, 1	L250 x 2

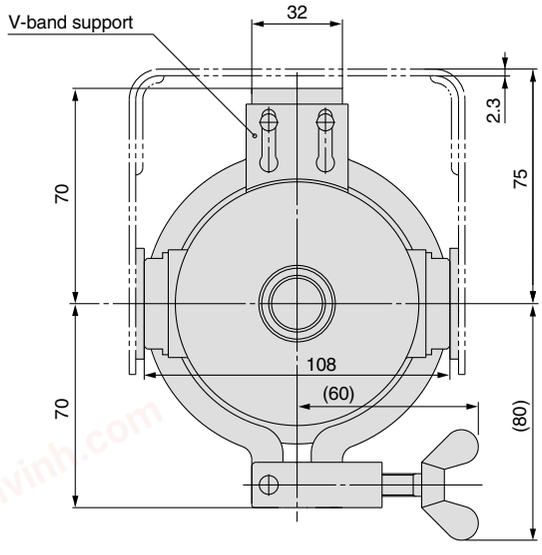

Bracket

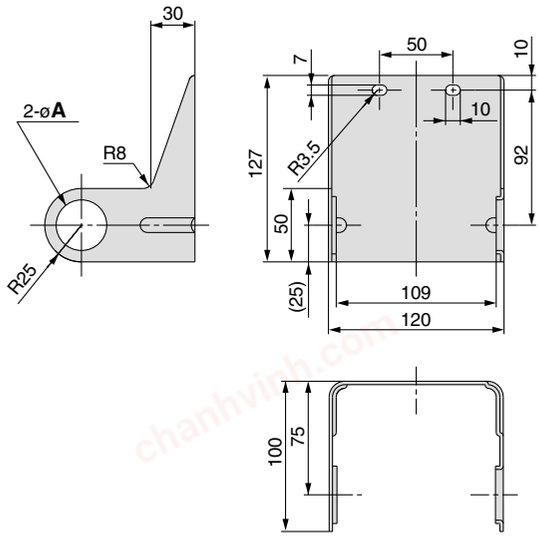

Part number	A	Applicable bore size
BP-13S	34.5	Rc 1
BP-14S	27.5	Rc 3/4
BP-15S	22	Rc 1/2

chanhvinh.com

Series FQ1
Made to Order

Consult SMC for detailed dimentions, specifications and lead times.

1 Without V-band Support X19

Useful for reverse IN-OUT installation, as the position of the V-band can be changed.

FQ101 □ □ □ □ □ **X19**

- Element type
- Port size
- Housing O-ring material
- Element size
- Option

—	None
–B	Bracket

2 Cover with Bracket Seat X61

Reliable securing is possible.
- Use the bracket assembly (Part no.: BP-12S-A). (The standard bracket cannot be used.)

FQ101 □ □ □ □ □ **X61**

- Element type
- Port size
- Housing O-ring material
- Element size
- Option

—	None
–B	Bracket

Dimensions

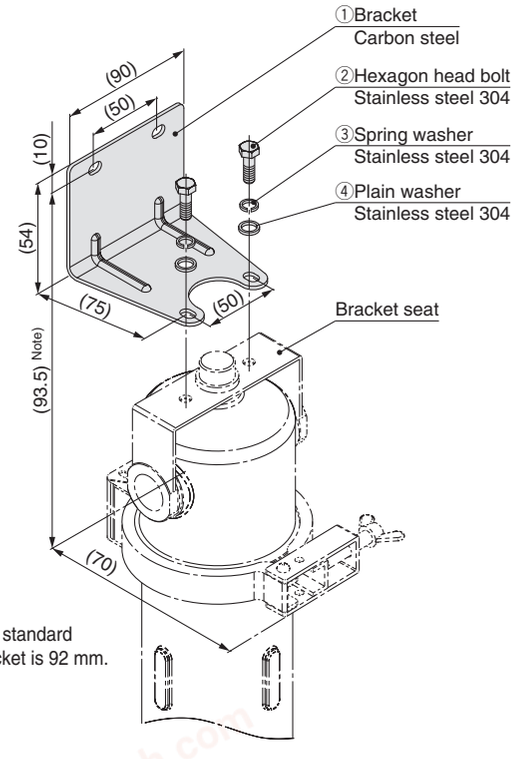

Note) The standard bracket is 92 mm.

Replacement Parts

Description	Part number	Part no. (Set contents)
Bracket assembly	**BP-12S-A**	①: 1 pc. ②, ③, ④: 2 pcs. each — 1 set

3 Chemical Resistant Type X68

O-ring materials have been changed to special fluoro rubber and PTFE, improving chemical resistance.

FQ101 V □ □ □ **X68**

- Element type
- Port size
- Element size
- Option

—	None
B	Bracket

Construction

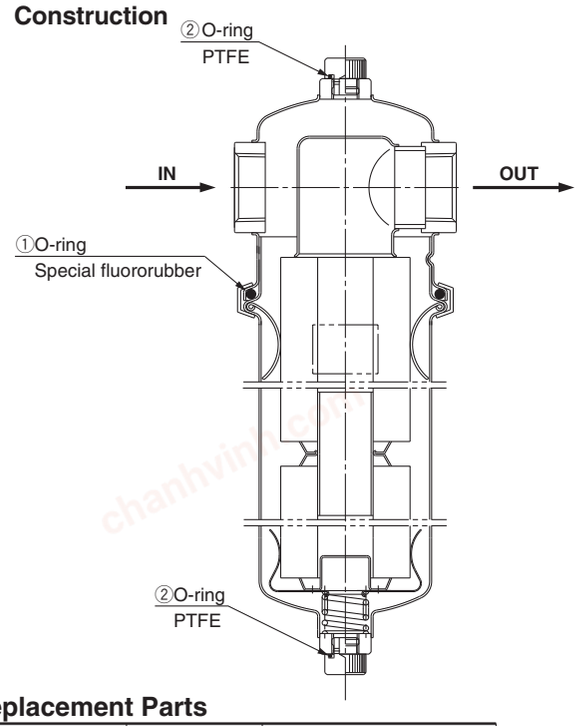

Replacement Parts

Description	Part number	Part no. (Set contents)
Seal kit	**FQ-KT002**	①: 1 pc. ②: 2 pcs. — 1 set

■ Special fluororubber O-ring chemical resistance

Applicable solvents Note)	
Hydrocarbon	Fuel C
	Hexane
	Benzene
	Toluene
Hydrogen halide	Chloroform
Ketone	Acetone
	MEK
Ester	Ethyl acetate
Amide	Formaldehyde
	DMF
Alcohol	Methanol
	Ethylene glycol
Ether	1, 4-dioxane
	MTBE
	TAME
Amine	Pyridine
	Butyl amine
Gasohol	Fuel C: Methanol = 75/25
	Fuel C: Methanol = 50/50
	Fuel C: Methanol = 25/75

∗ Consult SMC for fluids other than those listed.

Note) When using with liquids that contain flammable ingredients, implement safety measures, such as fire prevention and leakage detection sensors, and measures against static.

chanhvinh.com

Series FQ1
Made to Order
Consult SMC for detailed dimensions, specifications and lead times.

4 Nonstandard Elements for Precision Cleaning — X0

FQ101 □ □ □ □ □ **X0**

- Element size
- Housing O-ring material
- Bore size
- Element type — Select from tables below.
- Option

Membrane PP element "ED102S ... Series X0" (zero)



- Material: PP
- Optimal for high precision filtration (99% or more) of various cleaning solvents (mainly alkali-base)
- Dimensions: ø70 x L250

Recommended flow rate

Absolute filtration accuracy (μm)	Recommended flow rate (ℓ/min)*
0.2	5
0.4	

* Pressure loss: 0.01 to 0.02MPa
- Operating temperature: 0 to 70°C
- Differential pressure resistance: 0.5MPa/25°C

Element and seal part numbers

Dimensions	Element symbol	Filtration accuracy (μm)	Element part number
ø70 x 250	**UX20□**	0.2	ED102S-X20□X0
	UX40□	0.4	ED102S-X40□X0

Note) Specify seal material in place of "□" (N for NBR or V for FPM).
The suffix of the filter model part number is "X0".

Membrane CA element "ED111S ... Series X0" (zero)



- Material: CA
- Optimal for high precision filtration (99% or more) of various kinds of water
- Dimensions: ø70 x L250

Recommended flow rate

Absolute filtration accuracy (μm)	Recommended flow rate (ℓ/min)*
0.2	5
0.4	

* Pressure loss: 0.01 to 0.02MPa
- Operating temperature: 0 to 80°C
- Differential pressure resistance: 0.5MPa/25°C

Element and seal part numbers

Dimensions	Element symbol	Filtration accuracy (μm)	Element part number
ø70 x 250	**DX20□**	0.2	ED111S-X20□X0
	DX40□	0.4	ED111S-X40□X0

Note) Specify seal material in place of "□" (N for NBR or V for FPM).
The suffix of the filter model part number is "X0".

PP depth element "EJ202S, 302S, 402S ... Series X11"



- Material: Polypropylene and polyethylene
- No fibre separation due to thermal fusion of fibres
- A wide range of applications to various cleaning solvents
- Dimensions
  EJ202S: ø65 x L125
  EJ302S: ø65 x L250
  EJ402S: ø65 x L500

Recommended flow rate

Nominal filtration accuracy (μm)	Recommended flow rate (ℓ/min)*
1, 3, 5, 10 25, 50, 75	30

* Pressure loss: 0.01 to 0.02MPa
- Operating temperature: 0 to 60°C
- Differential pressure resistance: 0.2MPa

Element and seal part numbers

Dimensions	Element symbol	Filtration accuracy (μm)	Element part number
ø65 x 125	**W001**	1	EJ202S-001X11
	W003	3	EJ202S-003X11
	W005	5	EJ202S-005X11
	W010	10	EJ202S-010X11
	W025	25	EJ202S-025X11
	W050	50	EJ202S-050X11
	W075	75	EJ202S-075X11
ø65 x 250	**W001**	1	EJ302S-001X11
	W003	3	EJ302S-003X11
	W005	5	EJ302S-005X11
	W010	10	EJ302S-010X11
	W025	25	EJ302S-025X11
	W050	50	EJ302S-050X11
	W075	75	EJ302S-075X11
ø65 x 500	**W001**	1	EJ402S-001X11
	W003	3	EJ402S-003X11
	W005	5	EJ402S-005X11
	W010	10	EJ402S-010X11
	W025	25	EJ402S-025X11
	W050	50	EJ402S-050X11
	W075	75	EJ402S-075X11

Note) Seals are not necessary. The suffix of the filter model part number is "X0".

chanhvinh.com

Series FQ1
Made to Order

Consult SMC for detailed dimensions, specifications and lead times.

5 Nonstandard Elements for Precision Cleaning

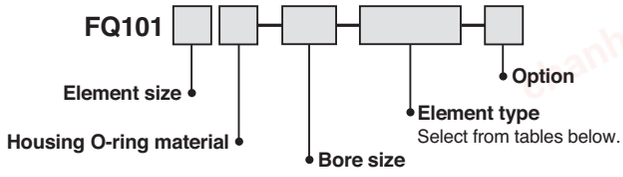

HEPO II element "Series EJ101S"



- Material: PET
- Optimal for high precision filtration (99% or more) of a wide range of fluids
- Dimensions: ø70 x L250 (EJ101S)

Recommended flow rate

Absolute filtration accuracy (μm)	Recommended flow rate (ℓ/min)*
2	20
4	
6	
13	

* Pressure loss: 0.01 to 0.02MPa
- Operating temperature: 0 to 80°C
- Differential pressure resistance: 0.5MPa/25°C

Element and seal part numbers

Dimensions	Element symbol	Filtration accuracy (μm)	Element part number
ø70 x 250	**J002**□	2	EJ101S-002□
	J004□	4	EJ101S-004□
	J006□	6	EJ101S-006□
	J013□	13	EJ101S-013□

Note) Specify seal material in place of "□" (N for NBR or V for FPM).
The suffix of the filter model part number is not necessary.

HEPO II element "Series EJ102S ... Series X0"
zero



- All parts of this element are made of polypropylene, which is optimal for various cleaning solvents including alkali and organic solvents.
- Nearly fibre separation or release of chemicals, since fibres themselves are directly fused and no adhesives are used.
- Pressure loss is low and relatively long service life is provided due to a larger filtration area
- Dimensions: ø70 x L250

Recommended flow rate

Absolute filtration accuracy (μm)	Recommended flow rate (ℓ/min)
2	20
4	
6	
13	

- Operating temperature: 0 to 80°C
- Differential pressure resistance: 0.5MPa

Element and seal part numbers

Dimensions	Element symbol	Filtration accuracy (μm)	Element part number
ø70 x 250	**R002**□	2	EJ102S-002□X0
	R004□	4	EJ102S-004□X0
	R006□	6	EJ102S-006□X0
	R013□	13	EJ102S-013□X0

Note) Specify seal material in place of "□" (N for NBR or V for FPM).

chanhvinh.com

Series FQ1
Specific Product Precautions

Be sure to read before handling.

Design

⚠ Caution

1. **Do not apply pressure beyond the operating pressure range.**
2. **Do not use at temperatures beyond the operating temperature range.**
3. **Fluid**
   Do not use with gases.
4. **Fatigue fracture**
   Be sure to implement necessary measures for the following operating conditions:
   1) When surge pressure is applied to the filter.
   2) When exposed to sliding or vibration due to insecure filter installation
   3) When the expansion, contraction, etc., is repeated due to thermal influence on the filter.
5. **Pressure drop**
   Adjust initial pressure drops to 0.01 MPa to 0.02 MPa or less.
6. **Corrosion**
   Be aware that corrosion can be caused depending on operating conditions or environments.

Selection

⚠ Warning

1. **When selecting a model, a model that does not specification ranges after due consideration of the purpose of use, specification requirements, and operating conditions (fluid, pressure, flow rate, temperature, environment).**
2. **Do not use at temperatures at or above the boiling point of the fluid.**
3. **Never use with gases, including air.**
4. **Do not use in locations where peak pressure rises to 1 MPa or more due to water hammer, surge pressure, etc.**

⚠ Caution

1. **Design circuits so that back pressure or back flow will not occur. If back pressure occurs, it may damage the element.**

Fluid

⚠ Warning

1. **Use a quick change filter for filtration of water, alkali and cleaning fluids, etc.**
2. **There may be circumstances where a seal or an O-ring deteriorates, causing leakage.**

Piping

⚠ Caution

1. **Install and connect piping ensuring space necessary for maintenance work and inspections.**
2. **Before piping is connected, air blow (flush) or wash it thoroughly to remove chips, cutting oil and other impurities from inside the piping.**
3. **Install piping after confirming IN and OUT.**
4. **Connection**
   Be sure that chips from the pipe threads and sealing material do not get inside the piping.
   Further, when sealant tape is used, leave 1.5 to 2 thread ridges exposed at the end of male threads.
5. **Line flushing**
   Flush the piping lines at the time of initial use and when replacing the element.
6. **Element replacement**
   1) Replace the element after removing the liquid from the piping and confirming that pressure inside the filter is zero (to assure safety).
      Further more, conduct replacement using an IN, OUT differential pressure of 0.1 MPa as a guide.
   2) Start replacement after confirming that the temperature of the filter body is within a range of 0 to 40°C.
   3) When setting the element, be sure that it does not tilt inside the case.

Operating Environment

⚠ Caution

1. **Discoloration or material deterioration may occur, in locations or atmospheres where there is a danger of corrosion. If corrosion progresses, the filter will lose its functions.**
2. **When used in locations where exposed to vibration or impact, fatigue fracture may occur.**
   Use it by implementing appropriate reinforcement.

Maintenance

⚠ Caution

1. **The pressure drop fluctuates depending on operating conditions. Since the pressure drop is one of the factors indicating filter characteristics, use the filter by setting a controlling standard.**