chanhvinh.com

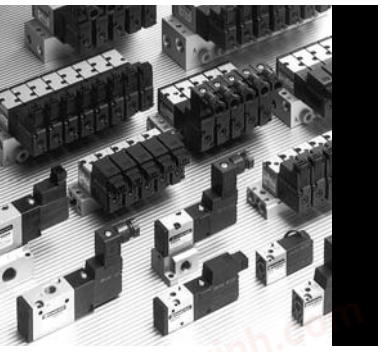

3 Port Solenoid Valve
Rubber Seal
VZ100/300/500

Solenoid Valve Variations

	Series	Port Size	Effective Area mm² (Nℓ/min)	Actuation	Voltage	Electrical Entry	Option/light and surge voltage suppressor	Manual Override
Body Ported	VZ100 	M5	N.C. P→A: 0.6 (33.37) A→R: 0.9 (49.08) N.O. R→A: 0.6 (33.37) A→P: 0.6 (33.37)	N.C. N.O.	(Standard) 100V AC 50/60Hz 200V AC 50/60Hz 24V DC (Option) 24V AC 50/60Hz 48V AC 50/60Hz 110V AC 50/60Hz 220V AC 50/60Hz 6V DC 12V DC 48V DC	●DIN Terminal (D) 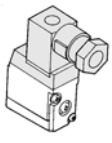	●Indicator light and surge voltage suppressor	●Non-locking push style
	VZ300 	M5	3.6 (196.3)					
	VZ500 	1/8	9.0 (490.75)					
Base Mounted	VZ300 	1/8	4.5 (245.38)					●Non-locking push style ●Locking slotted style ●Locking knob style
	VZ500 	1/8, 1/4	9.0 (490.75)					

SY
SYJ
VK
VZ
VT
VT
VP
VG
VQ
VQZ

chanhvinh.com

VZ100/300/500

Manifold Variations

Valve Series		A port position	P/R port size	A port size				
				M5	1/8	With one-touch fitting Applicable tube O.D.		
						ø4	ø6	ø8
Body Ported	VZ100	Top	M5 X 0.8	●	—	—	—	—
			1/8	●	—	—	—	—
	VZ300	Top	1/8	●	—	—	—	—
	VZ500	Top	1/8	—	●(1)	—	—	—
			1/4	—	●	—	—	—
Base Mounted	VZ300	Bottom	1/8	●	●	—	—	—
		Side		●	●	●	●	—
	VZ500	Bottom	1/8	—	●(1)	—	—	—
			1/4	—	●	—	—	—
		Side	1/4	—	●	—	●	●

Note 1) Internal pilot

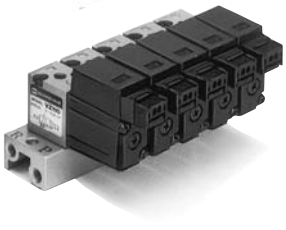

Series VZ100

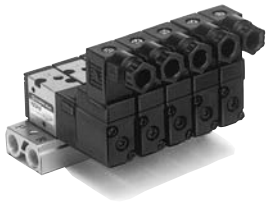

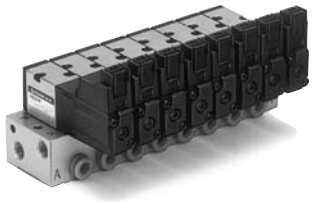

Series VZ300

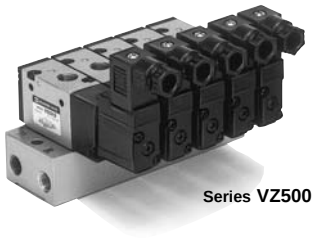

Series VZ500

chanhvinh.com

⚠ Precautions

Be sure to read before handling. Refer to p.0-33 to 0-36 for Safety Instructions and common precautions.

⚠ Warning

Manual Override

●Manual override is capable in 2 ways, non-locking push style and locking style. (Locking style is for VZ300, VZ500 only)

■The non-locking push style must be pressed in the direction of the arrow. The locking style must be turned in the direction of the arrow.

–: Non-locking push style | B: Locking slotted style | C: Locking knob style

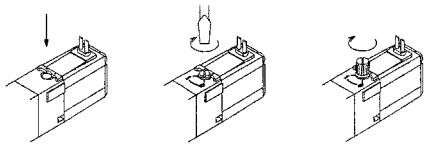

When operating the locking style manually, apply torque of 0.2Nm or less.

●During manual operation, the equipment that is connected will operate. Therefore, make sure there are no hazardous conditions before operation.

DIN terminal

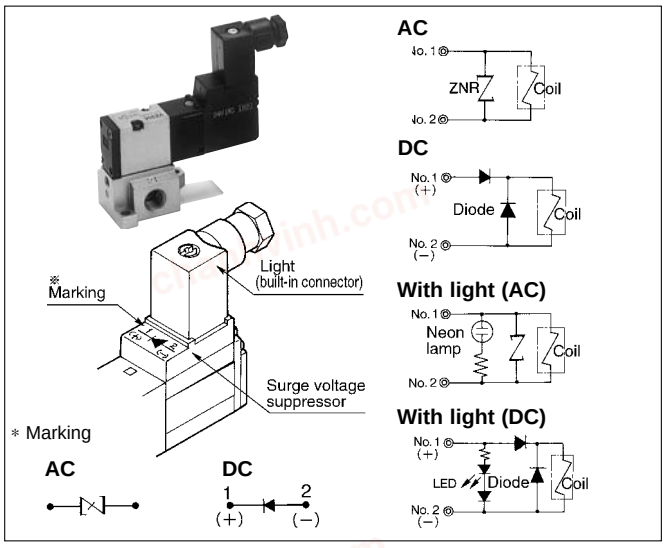

In the case of DC wiring, connect terminal No.1 of the connector to the positive [+] side, and terminal No. 2 to the negative [–] side. (Refer to the marks on the terminal board.)

Common Exhaust for Main Valve & Pilot Valve

VZ3□$^{2}_{4}$M, VZ5□$^{2}_{4}$M

Exhaust air from the pilot valve will flow to the main valve exhaust port.

●For use in an environment in which exhaust from the pilot valve is undesirable.

●For use when the intrusion of dust from the surroundings must be prevented. Also, make sure the piping will not restrict the flow from the exhaust port.

chanhvinh.com

VZ100/300/500

How to Use DIN Connector

Connection

1) Loosen set screw and pull out connector from the terminal block of solenoid.
2) Pull out screw and insert a screwdriver into the slit area near the bottom of terminal block to separate block and housing.
3) Loosen the terminal screw of the terminal block, place bare end of lead wire into terminal in accordance with the wiring method, and affix it securely with the terminal screw.
4) Tighten ground nut to secure the wire.

Change of electrical entry (orientation)

After separating the terminal block and housing, mount the housing at any position (total 4 directions, per 90 degrees), therefore changing electrical entry.
∗In the case of indicator light, avoid damaging the light with lead wire.

Precautions

Plug the connector in or out vertically, never at an angle.

Applicable cable

Cable O.D. ø3.5 to ø7
(Reference) 0.5mm2 2-core and 3-core wires equivalent to JISC3306.

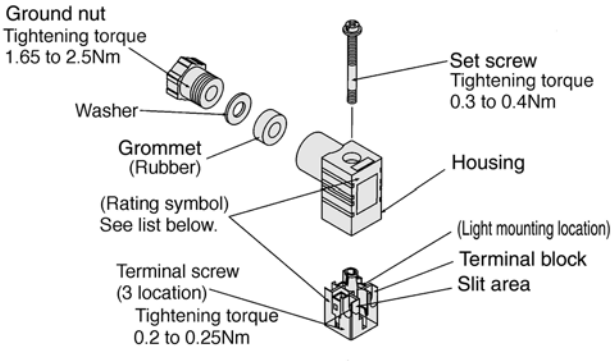

Connector Part No.

Without light	K31

With light

Rated voltage	Symbol	Part No.
100V AC	100V	K33
200V AC	200V	
110V AC	110V	
220V AC	220V	
240V AC	240V	
6V DC	6VD	K32
12V DC	12VD	
24V DC	24VD	
48V DC	48VD	

Connector with Light Circuit

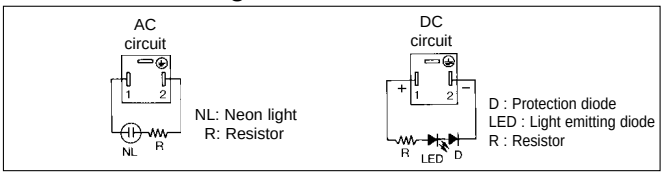

How to Order Solenoid Assembly

DXT170 − C − 5 L [ ] − Q

Applicable model

A	VZ110
C	VZ300 / VZ500 Series
E	VZ120

Indicator light and surge suppressor

–	None
Z∗	Indicator light and surge suppressor
S	Surge voltage suppressor

∗Indicator light is not available for grommet style.

Coil rated voltage

1	100V AC 50/60Hz
2	200V AC 50/60Hz
3	200V AC 50/60Hz
4	220V AC 50/60Hz
5	24V DC
6	12V DC
9	Others

Order Made Contact SMC for other voltages (9)

Electrical entry

D	DIN terminal	With connector
DO		Without connector

Flow rate

Refer to the p.0-36 for flow rate.

chanhvinh.com

3 Port Body Ported Rubber Seal

Series VZ100

How to Order

SY
SYJ
VK
VZ
VT
VT
VP
VG
VQ
VQZ

Ordering source area code | Actuation | Rated voltage | Electrical entry | Indicator light and surge voltage suppressor | Port size | Option

Body Ported E VZ1 1 0 — 5 D — M5 — Q

Actuation

1	Normally closed 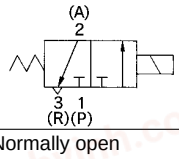
2	Normally open 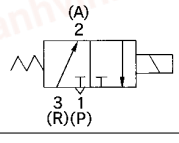

Regarding VZ120, R port is a supply port.

Ordering source area code

Code	areas
–	Japan,Asia Australia,England
E	Europe
N	North America

Rated voltage

1	100V AC 50/60Hz
2	200V AC 50/60Hz
3	110V AC 50/60Hz
4	220V AC 50/60Hz
5	24V DC
6	12V DC
9	Others

Order Made Contact SMC for other voltages (9)

Electrical entry

DIN terminal

D: With connector

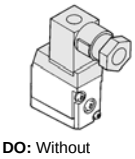

DO: Without connector

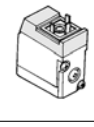

Indicator light and surge voltage suppressor

–	None
Z*	With indicator light and surge voltage suppressor
S	With surge voltage suppressor

* DOZ is not available.

Port size

M5	M5

Option

F: With foot style bracket

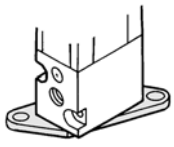

Note) Bracket is not assembled.

⚠ Protective class class I (Mark: ⏚)

chanhvinh.com

VZ100

Low Power Consumption: 1.8WDC

Applicable for Vacuum Use –100kPa



Refer to the p.2.4-8 to 2.4-10 for manifold use.

Specifications

Fluid	Air
Operating pressure range	See below
Ambient and fluid temperature (°C)	Max. 50
Response time (ms)(1)	15 or less
Max. operating frequency (Hz)	15
Effective area	See below
Manual override	Non-locking push style
Lubrication	Non-lube
Mounting position	Free
Impact/Vibration resistance (m/s²) (2)	300/50
Protection structure	Dust proof

Note 1) According to dynamic performance test of JIS B8374-1981.(Coil temperature 20°C, rated voltage, without surge voltage suppressor)
Note 2) Impact resistance: No malfunction from test using drop impact tester, to axis and right angle directions of main valve and armature, each one time when energized and de-energized. (Value in the initial stage.)
Vibration resistance: No malfunction from test with 45 to 1000Hz 1 sweep, to axis and right angle directions of main valve and armature, each one time when energized and de-energized. (Value in the initial stage.)

Solenoid specifications

∗Option

Electrical entry			DIN terminal(D)
Coil rated voltage V	AC50/60Hz		100, 200, 24∗, 48∗, 110∗, 220∗
	DC		24, 6∗, 12∗, 48∗
Allowable voltage			15 to +10% rated voltage
Power consumption W Note) [Current mA]	DC		1.8(with light 2.1) [24V DC: 75(with light 87.5)]
Apparent power VA Note) [Current mA]	AC	Inrush	4.5/50Hz, 4.2/60Hz [100V AC: 45/50Hz, 42/60Hz; 200V AC: 22.5/50Hz, 21/60Hz]
		Holding	3.5/50Hz, 3/60Hz [100V AC: 35/50Hz, 30/60Hz; 200V AC: 17.5/50Hz, 15/60Hz]
Surge voltage suppressor			DC: diode, AC: ZNR
Indicator light			DC: LED(Red), AC: Neon light

Note) At rated voltage

Option

Description		Model No.	Note
Foot style bracket		DXT170-34-1A	With mounting screw (M3 X 6)
Silencer	M5	AN120-M5 (ø8 X 17ℓ)	For valve unit (R port), Noise reduction: 21dB or more, Effective orifice 5mm²

Operating Pressure Range and Effective Area

Valve		Actuation	Operating press. range (MPa)	Vacuum specification MPa		Port size	Effective area (mm²)	Weight (g)
				P port	R port			
Construction	VZ110	N.C.	0 to 0.7	–27kPa to0.6	–100kPa to 0	M5 X 0.8	P→A: 0.6 (33.37) A→R: 0.9 (49.08)	70
	VZ120	N.O.	0 to 0.5	–100kPa to 0	–100kPa to 0.4		R→A: 0.6 (33.37) A→P: 0.6 (33.37)	

Note) Regarding VZ120, R port is a supply port.

Construction

VZ110 (N.C.)

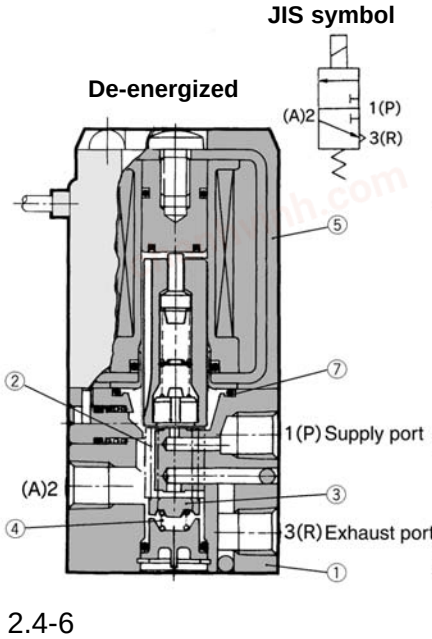

VZ120 (N.O.)

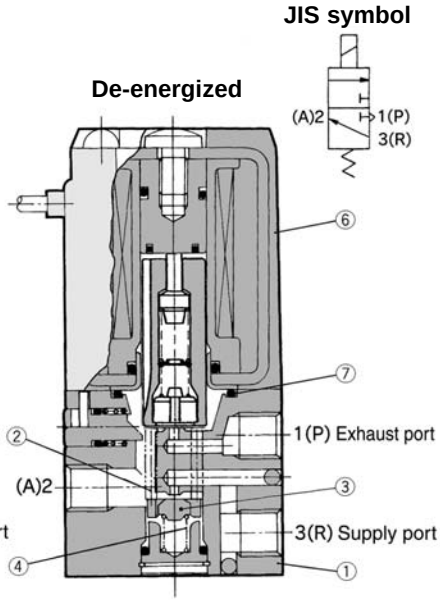

Component Parts

No.	Description	Material	Note
①	Body	ZDC	Platinum silver
②	Push rod	Resin	
③	EXH poppet	NBR	
④	N.C. Back up spring / N.O. poppet spring	SUS	

Replacement Parts

No.	Description	Part No.	Material	Note
⑤	Solenoid Ass'y	DXT170-A-□□□	Epoxy, Stainless steel	VZ110
⑥	Solenoid Ass'y	DXT170-E-□□□	Epoxy, Stainless steel	VZ120
⑦	O ring	13 X 11 X 1	NBR	Common with VZ300

chanhvinh.com



Body Ported

Grommet (G), (H)
VZ1□0-□$^{G}_{H}$□-M5

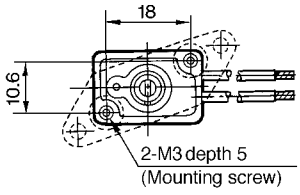

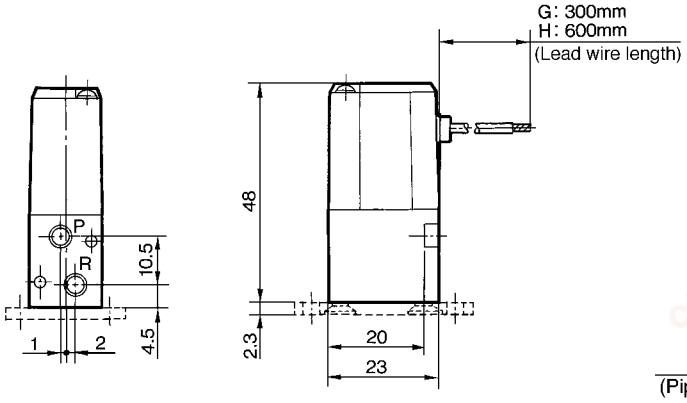

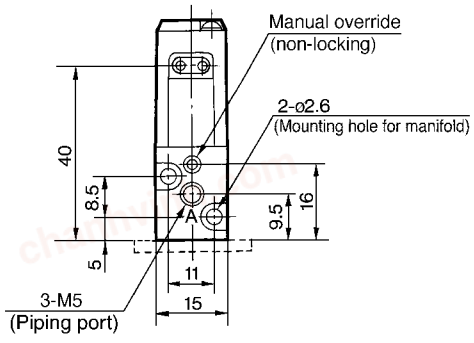

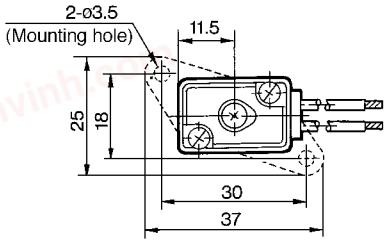

Note: This valve series is now only available with DIN connector.

L plug connector (L)
VZ1□0-□L□-M5

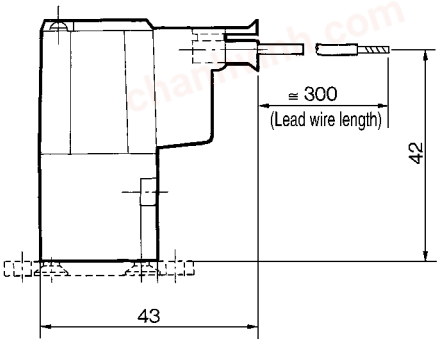

M plug connector (M)
VZ1□0-□M□-M5

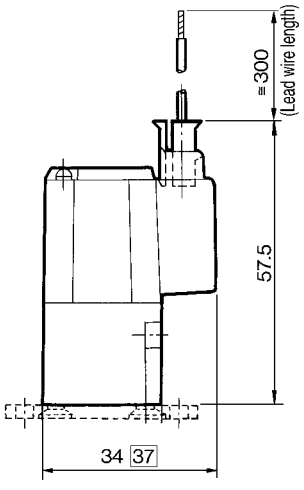

DIN terminal (D)
VZ1□0-□D□-M5-Q

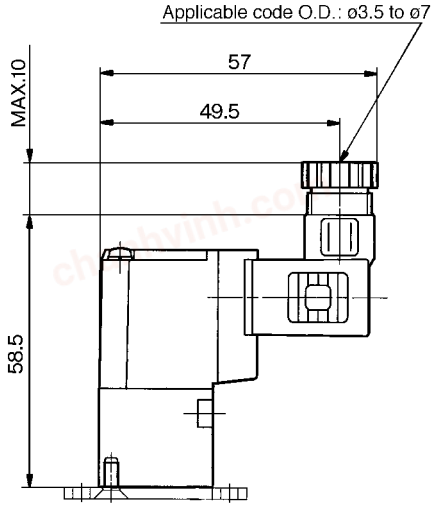

: with indicator light and surge voltage suppressor

chanhvinh.com

Series VZ100
Manifold



Manifold Specifications

Model		VV3Z1-01-□1	VV4Z1-20-□1
Manifold		Single base/B mount	
P(SUP)/R(EXH)style		Common SUP and EXH type	
Valve stations		2 to 20 stations (1)	
A port piping	Position	Valve	
	Direction	Top	
Port size	P/R port	M5	1/8
	A port	M5	
Valve effective area mm² (Nℓ/min)(2)	VZ110	P→A: 0.5 (27.48) A→R: 0.86 (47.11)	
	VZ120	R→A: 0.56 (30.43) A→P: 0.5 (27.48)	
Page on How to Order		p.2.4-9	p.2.4-10

Note 1) If there are more than 10 stations, exhaust from both sides of manifold.
Note 2) Value at manifold base mounted
Note 3) Not able to use VZ120 and VZ110 on the same manifold base.
Note 4) In case of VZ120, supply air to R port and exhaust from P port.

How to Order Manifold Base

To order valves and blank plate assembly mounted onto the manifold, list valves and blank plate assembly with manifold base.
(Sample)
VV3Z1-01-031-Q ·····1 pc. (Manifold base)
VZ110-5D-M5-Q ·····2 pcs. (Valve)
DXT170-25-1A-Q·····1 pc. (Blank plate assembly)

Option

Combinations of solenoid valve, gasket and manifold base

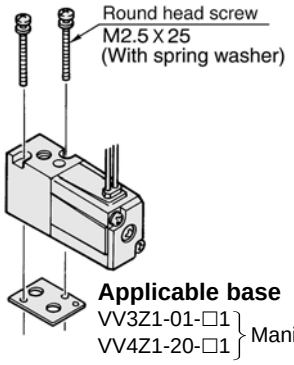

Applicable base
VV3Z1-01-□1
VV4Z1-20-□1 } Manifold base

Blank plate assembly DXT170-25-1A

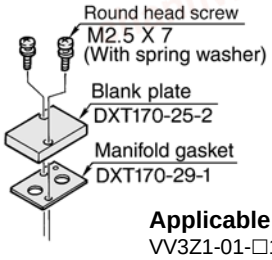

Applicable base
VV3Z1-01-□1
VV4Z1-20-□1 } Manifold base

Individual EXH spacer assembly DXT170-48-1A

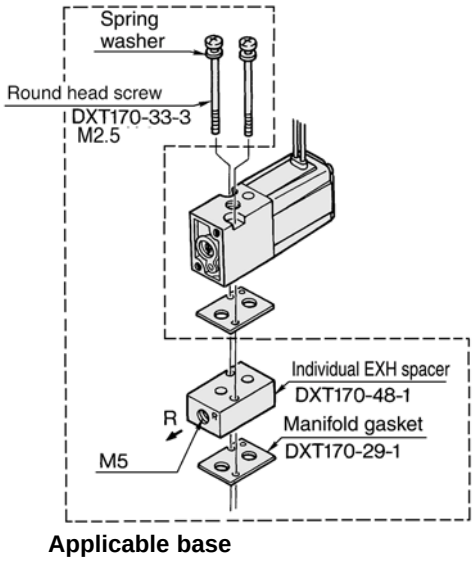

Applicable base
VV3Z1-01-□1
VV4Z1-20-□1 } Manifold base

Individual SUP spacer assembly DXT170-44-1A

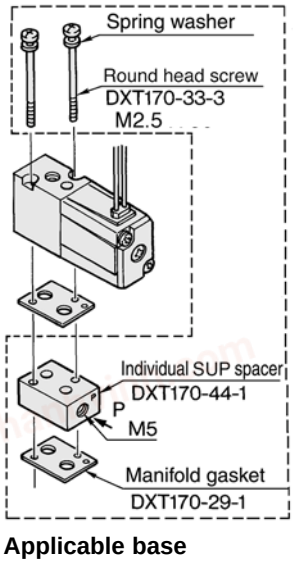

Applicable base
VV3Z1-01-□1
VV4Z1-20-□1 } Manifold base

chanhvinh.com

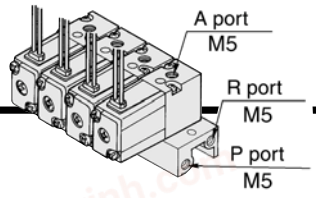

01 Type Manifold Base: Top Ported

How to Order

E VV3Z1 − 01 − 05 1 − [ ] [ ] − Q

Ordering source area code

Code	areas
–	Japan,Asia Australia,England
E	Europe
N	North America

Stations

02	2 stations
⋮	⋮
20	20 stations

P, R port thread

–	Rc (PT)
00F	G (PF)
00N	NPT
00T	NPTF

Option

F: With foot bracket

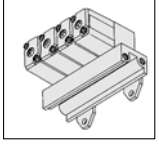

* The bracket is not assembled.

Note) ● If there are more than 10 stations, exhaust from both sides manifold.
● It is not able to use VZ110 and VZ120 on the same manifold base.

Applicable solenoid valve
VZ110-□□□-M5-Q
VZ120-□□□-M5-Q
Applicable blank plate assembly
DXT170-25-1A
Individual EXH spacer assembly
DXT170-48-1A
Individual SUP spacer assembly
DXT170-44-1A

Grommet (G), (H)

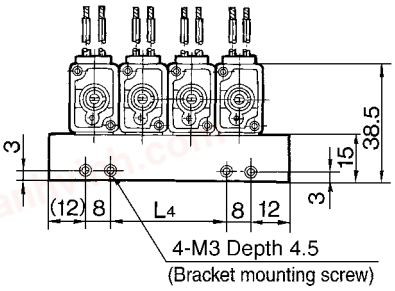

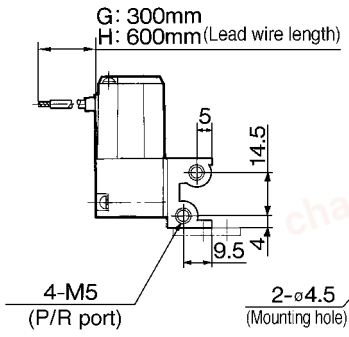

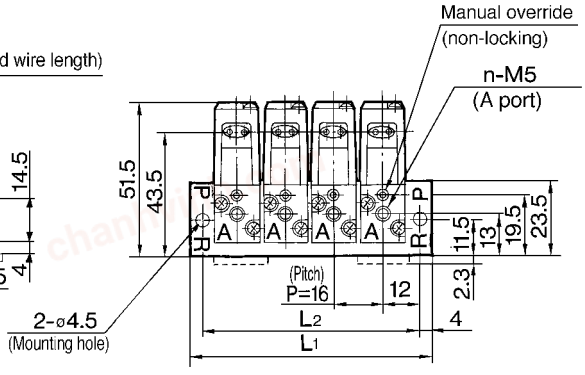

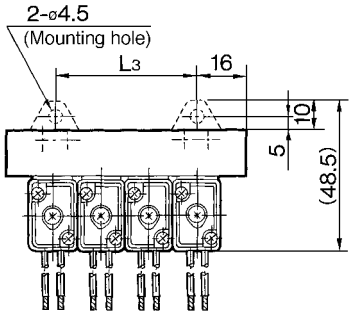

Note: This valve series is now only available with DIN connector.

Station	2	3	4	5	6	7	8	9	10	11	12	13	14	15	16	17	18	19	20
L1	48	64	80	96	112	128	144	160	176	192	208	224	241	256	272	288	304	320	336
L2	40	56	72	88	104	120	136	152	168	184	200	216	232	248	264	280	296	312	328
L3	16	32	48	64	80	96	112	128	144	160	176	192	208	224	240	256	272	288	304
L4	8	24	40	56	72	88	104	120	136	152	168	184	200	216	232	248	264	280	296

L plug connector (L)

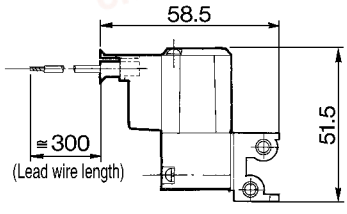

M plug connector (M)

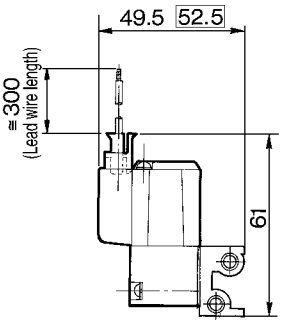

DIN terminal (D)

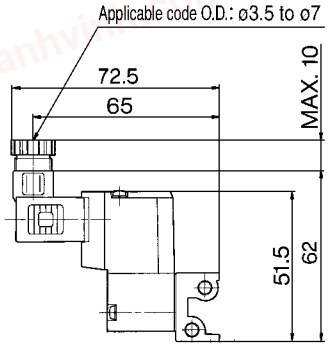

: with indicator light and surge voltage suppressor

chanhvinh.com

VZ100

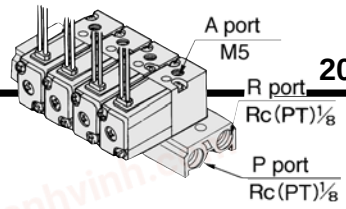

20 Type Manifold Base: Top Ported

How to Order

E VV4Z1 – 20 – 05 1 – [ ] – [ ] – Q

Ordering source area code

Code	areas
–	Japan,Asia Australia,England
E	Europe
N	North America

Stations

02	2 stations
⋮	⋮
20	20 stations

P, R port thread

–	Rc (PT)
00F	G (PF)
00N	NPT
00T	NPTF

Option

F: With foot bracket

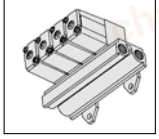

* The bracket is not assembled.

Note) ● If there are more than 10 stations, supply air to SUP port on both sides of the manifold and exhaust from EXH port on both sides of the manifold.
● It is not able to use VZ110 and VZ120 on the same manifold base.

Applicable solenoid valve
VZ110-□□□-M5-Q
VZ120-□□□-M5-Q
Applicable blank plate assembly
DXT170-25-1A
Individual EXH spacer assembly
DXT170-48-1A
Individual SUP spacer assembly
DXT170-44-1A

Grommet (G), (H)

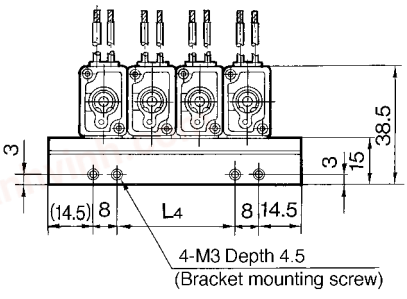

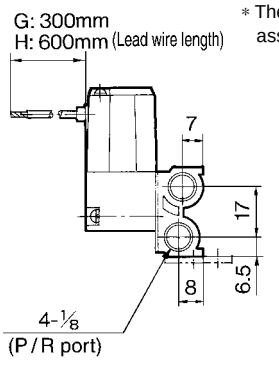

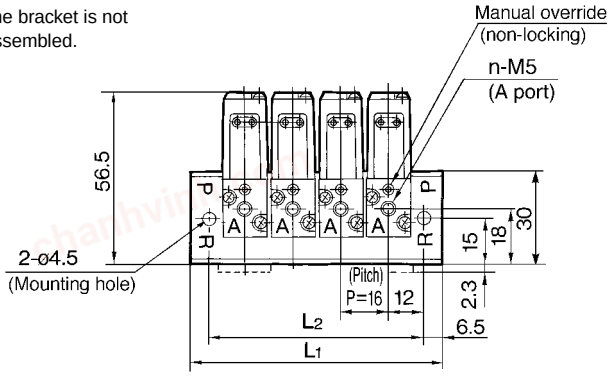

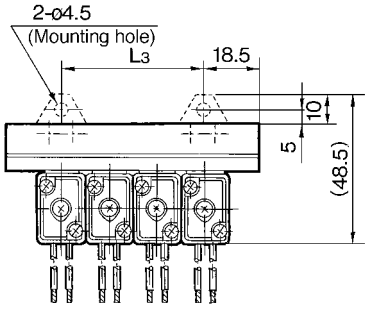

Note: This valve series is now only available with DIN connector.

Station	2	3	4	5	6	7	8	9	10	11	12	13	14	15	16	17	18	19	20
L1	53	69	85	101	117	133	149	165	181	197	213	229	245	261	277	293	309	325	341
L2	40	56	72	88	104	120	136	152	168	184	200	216	232	248	264	280	296	312	328
L3	16	32	48	64	80	96	112	128	144	160	176	192	208	224	240	256	272	288	304
L4	8	24	40	56	72	88	104	120	136	152	168	184	200	216	232	248	264	280	296

L plug connector (L)

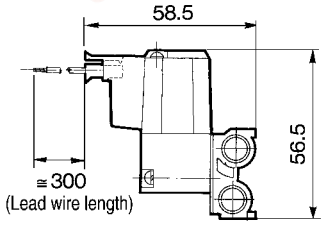

M plug connector (M)

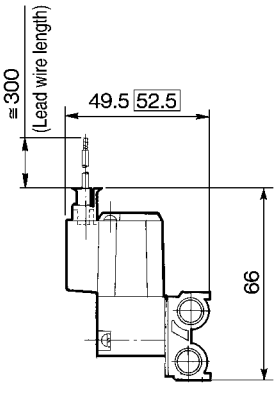

DIN terminal (D)

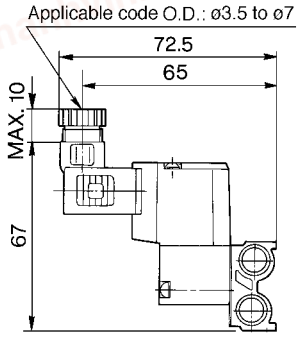

: with indicator light and surge voltage suppressor

chanhvinh.com

3 Port Body Ported, Base Mounted Rubber Seal

Series VZ300

How to Order

Ordering source area code

Code	areas
–	Japan,Asia Australia,England
E	Europe
N	North America

	Ordering source area code		Actuation	Body option	Rated voltage	Electrical entry	Indicator light and surge voltage suppressor	Manual override	Port Size	Option	
Body Ported	E	VZ3	1	2		5	D			M5		Q
Base Mounted	E	VZ3	1	4		5	D					Q

Actuation

1	Normally closed (A) 2 / 1 3 (P)(R)
2	Normally open (A) 2 / 1 3 (P)(R)

Body option

–: Individual pilot exhaust — R port, P/E port

M: Common exhaust (pilot and main valve) — R port, P/E port

R: External pilot Note)

Note) VZ3□2R is only for Manifold.

Rated voltage

1	100V AC 50/60Hz
2	200V AC 50/60Hz
3	110V AC 50/60Hz
4	220V AC 50/60Hz
5	24V DC
6	12V DC
9	Others

Order Made Contact SMC for other voltages (9)

Electrical entry

DIN terminal

D: With connector

DO: Without connector

Port Size

M5: M5

Option

F: With foot bracket

Note) •The bracket is not assembled.
•Except for external pilot

Thread

–	Rc (PT)
F	G (PF)
N	NPT
T	NPTF

Port size

–: Without sub-plate

01: With 1/8 sub-plate

Manual override

–: Non-locking push style

B: Locking slotted style

C: Locking knob style

Indicator light and surge voltage suppressor

–	None
Z*	Indicator light and surge voltage suppressor
S	Surge voltage suppressor

* DOZ is not available.

⚠ Protective class
class I (Mark: ⏚)

SY
SYJ
VK
VZ
VT
VT
VP
VG
VQ
VQZ

chanhvinh.com

VZ300

Low Power Consumption: 1.8WDC

Applicable for Vacuum Use –100kPa

VZ300R: External pilot style

Exhaust measures for the pilot valve are unnecessary.

VZ300M: Central exhaust style
It is not necessary to take exhaust measures for the pilot valve for environmental protection.

Can also be used as a selector valve or a divider valve.

VZ300R: External pilot style
Can be used for universal porting.



Series VZ300/Body Ported



Series VZ300/Base Mounted

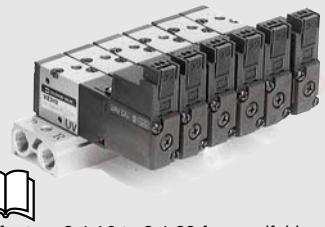

Refer to p.2.4-16 to 2.4-28 for manifold use.

Specifications

Fluid		Air
Operating pressure (MPa)	Internal pilot	0.15 to 0.7
Ambient and fluid temperature (˚C)		Max. 50
Response time (ms) {0.5MPa} (1)		20 or less
Max. operating frequency (Hz)		10
Effective area		See below
Manual override (2)		Non-locking push style, Locking slotted style, Locking knob style
Pilot exhaust		Individual pilot exhaust, Common exhaust (pilot and main valve)
Lubrication		Non-lube
Mounting position		Free
Impact/vibration resistance (m/s²) (3)		300/50
Protection structure		Dust proof

Note 1) According to dynamic performance test of JIS B8374-1981.(Coil temperature 20˚C, rated voltage,
Note 2) without surge voltage suppressor)
Note 3) When operating the locking style manually, apply torque of 0.2Nm or less.
Impact resistance: No malfunction from test using drop impact tester, to axis and right angle directions of main valve and armature, each one time when energized and de-energized.
Vibration resistance: (Value in the initial stage.)
No malfunction from test with 8.3 to 2000Hz 1 sweep, to axis and right angle directions of main valve and armature, each one time when energized and de-energized. (Value in the initial stage.)

Solenoid Specifications

∗Option

Electrical entry			DIN terminal (D)
Coil rated voltage V	AC50/60Hz		100, 200, 24∗, 48∗, 110∗, 220∗
	DC		24, 6∗, 12∗, 48∗
Allowable voltage %			–15 to +10% of rated voltage
Power consumption W (1) [Current mA]	DC		1.8 (with light 2.1)[24VDC: 75 (with light 87.5)]
Apparent power VA (1) [Current mA]	AC	Inrush	4.5/50Hz, 4.2/60Hz [100V AC: 45/50Hz, 42/60Hz; 200V AC: 22.5/50Hz, 21/60Hz]
		Holding	3.5/50Hz, 3/60Hz [100V AC: 35/50Hz, 30/60Hz; 200V AC: 17.5/50Hz, 15/60Hz]
Surge voltage suppressor			DC: Diode, AC: ZNR
Indicator light			DC: LED(red), AC: Neon light

Note 1) At rated voltage

Effective Area and Weight

Valve		Actuation	Port size	Effective area (mm²) (Nℓ/min)	Weight (g)
Body ported style	**VZ312**	N.C.	M5 X 0.8	3.6 (196.3)	75
	VZ322	N.O.			
Base mounted style (with sub-plate)	**VZ314**	N.C.	1/8	4.5 (245.38)	105 (without sub-plate: 75)
	VZ324	N.O.			

Option

Description	Part No.	Note
Foot bracket	DXT170-34-1B	With screw (for VZ3□2)

chanhvinh.com

External Pilot

VZ300R

This obtains external pressure for the pilot valve separately from the main valve pressure. It can be operated with a low pressure line with a vacuum (to –100kPa) or below 0.15MPa.

Specifications

Applicable model	Base mounted style(VZ314R, VZ324R)	
Operating pressure range MPa	Main pressure	–100kPa to 0.7
	External pilot pressure	0.15 to 0.7

Note 1) Refer to the p.2.4-16 for manifold base.

Note 2) In the case of the body ported style, the pilot style (VZ3□2R) is used exclusively on a manifold. An external pilot style that can be used individually is available as a Made to Order.

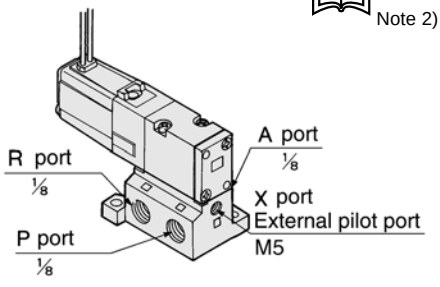

JIS symbol

VZ31□R

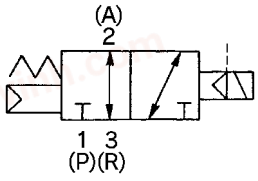

VZ32□R

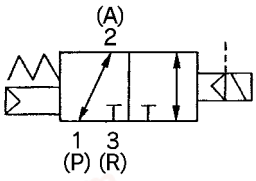

Construction

N.C.

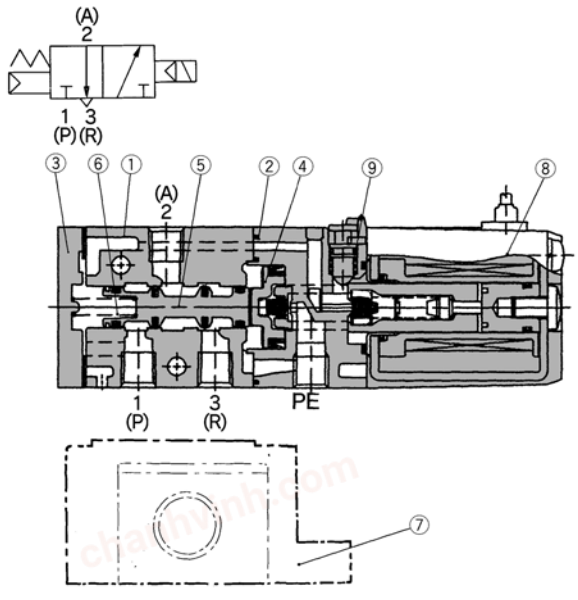

N.O.

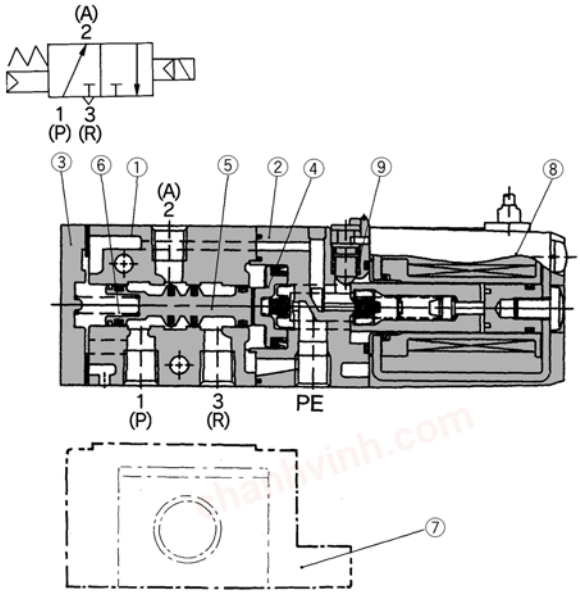

Component Parts

No.	Description	Material	Note
①	Body	Aluminium die cast	Platinum silver
②	Piston plate	Resin	Black
③	End cover	Aluminium die cast	Black
④	Piston	Resin	—
⑤	Spool valve ass'y	—	—
⑥	Spool spring	Stainless steel	—

Replacement Parts

No.	Description	Material	Part No.	Note
⑦	Sub-plate	Aluminium die cast	DXT200-13-1P	
⑧	Solenoid ass'y	Epoxy, stainless steel	DXT170-C-□□□	
⑨	O-ring	NBR	13 X 11 X 1	Common with VZ100

chanhvinh.com

VZ300



Body Ported

Grommet (G), (H)
VZ3□2-□$^{G}_{H}$□□-M5

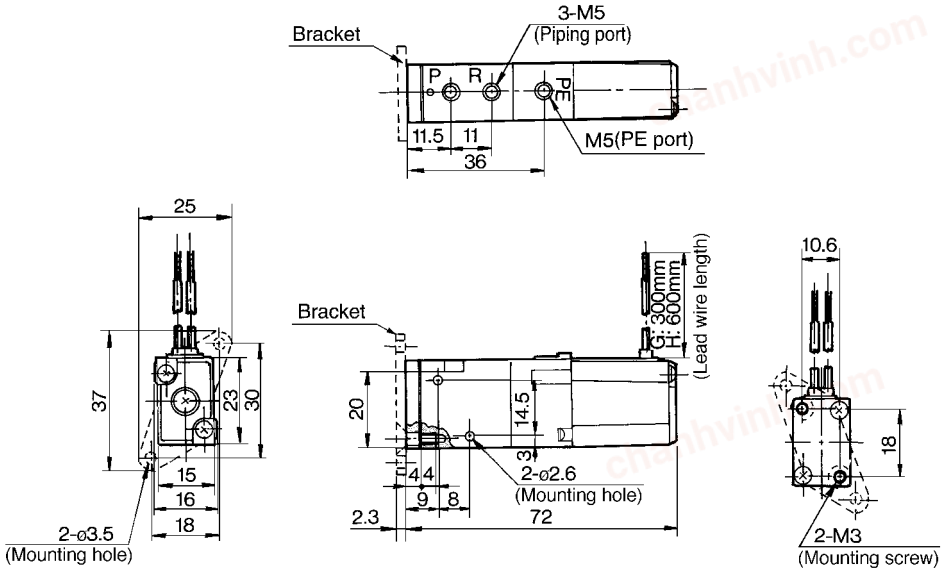

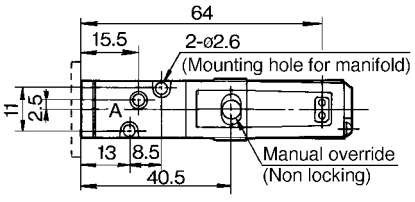

Note: This valve series is now only available with DIN connector.

L plug connector (L)
VZ3□2-□L□□-M5

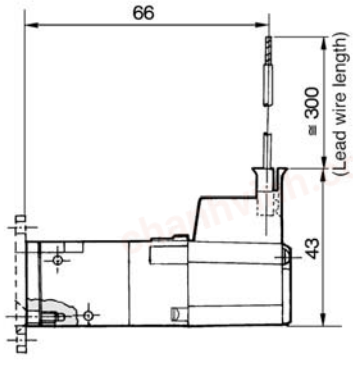

M plug connector (M)
VZ3□2-□M□□-M5

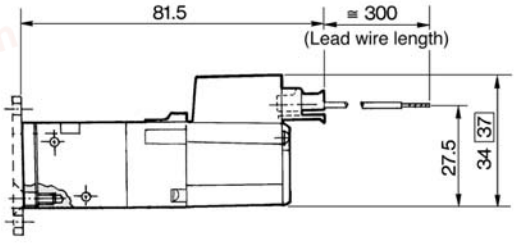

DIN terminal (D)
VZ3□2-□D□□-M5-Q

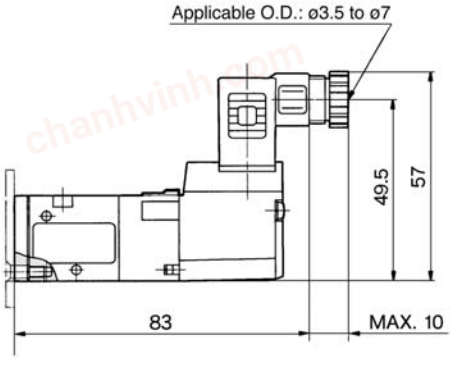

: with indicator light and surge voltage suppressor

chanhvinh.com



Base Mounted

Grommet (G), (H)
VZ3□4-□$^{G}_{H}$□□-01

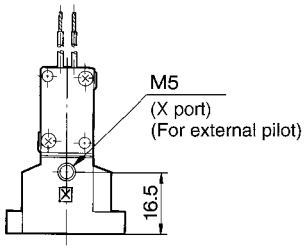

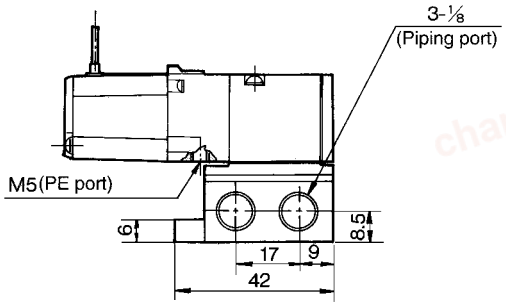

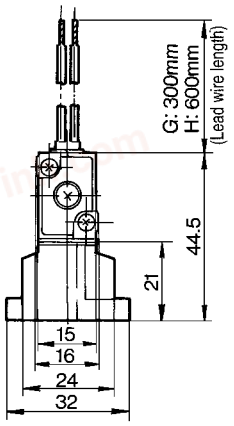

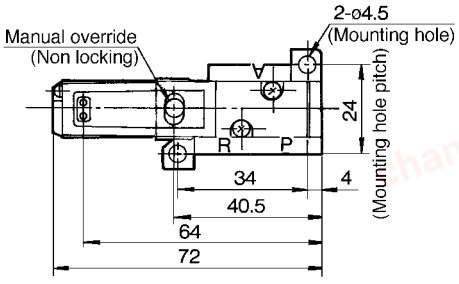

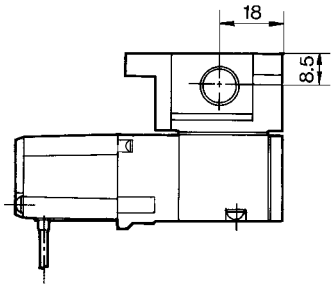

Note: This valve series is now only available with DIN connector.

L plug connector (L)
VZ3□4-□L□□-01

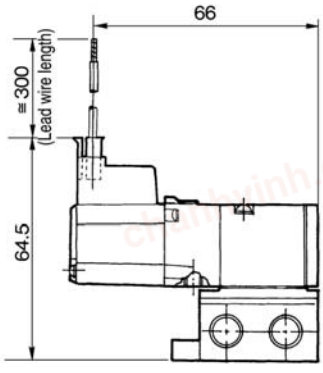

M plug connector (M)
VZ3□4-□M□□-01

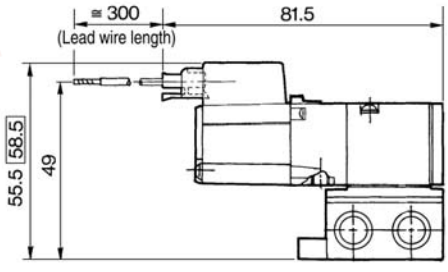

DIN terminal (D)
VZ3□4-□D□□-01-Q

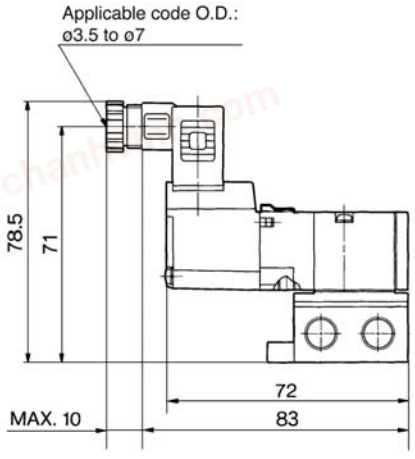

: with indicator light and surge voltage suppressor

chanhvinh.com

Series VZ300
Manifold

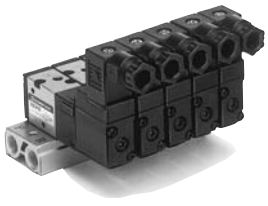

Manifold Specifications

Model	Internal pilot	20-□1	40-□2	40-□1
	External pilot	21R-□1	40R-□2	40R-□1
Manifold		Single base/B mount		
P(SUP)/R(EXH) style		Common SUP/Common EXH		
Stations		2 to 20		
A port piping	Position	Valve	Base	
	Direction	Top	Bottom	Side
Port size	P, R port	1/8	1/8	1/8
	A port	M5 X 0.8	M5 X 0.8 1/8	M5 X 0.8, 1/8 , C4(ø4One touch fitting), C6(ø6One touchfitting)
	X port (1)	M5 X 0.8	M5 X 0.8	M5 X 0.8
Valve effective area (mm²) (Nℓ/min) (2)	Body ported VZ3□2/VZ3□2R	3.4 (0.19)	–	
	Base mounted VZ3□4/VZ3□4R	–	M5: 3.8(206.12) 1/8 : 4.7(255.19)	M5: 3.3(176.67) 1/8 : 4.8(265.01) C4, C6: 3.8(206.12)
Page on How to Order	Internal pilot	p.2.4-17	p.2.4-18, 24-19	p.2.4-20 to 2.4-22
	External pilot	p.2.4-23	p.2.4-24, 24-25	p.2.4-26 to 2.4-28

Note 1) Only for external pilot
Note 2) Value at manifold base mounted

How to Order Manifold Base

To order valves and blank plate assembly mounted onto the manifold, list valves and blank plate assembly with manifold base.
(Sample)
VV3Z3-20-031-Q···1 pc. (Manifold base)
VZ312-5D-M5-Q····2 pcs. (Valve)
DXT170-25-1A·····1 pc. (Blank plate ass'y)

Option

Combinations of solenoid valve, manifold gasket and manifold base

Body ported (VZ3□2)

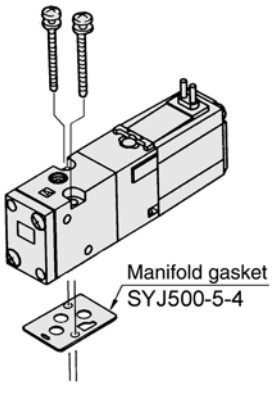

Applicable base
VV3Z3-21R-□1
Manifold base

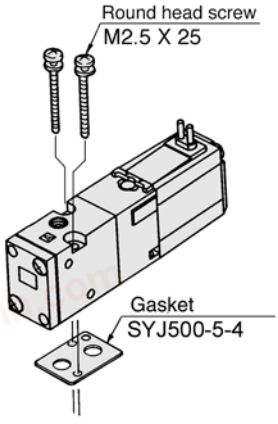

Applicable base
VV3Z3-20-□1
Manifold base

Base mounted (VZ3□4)

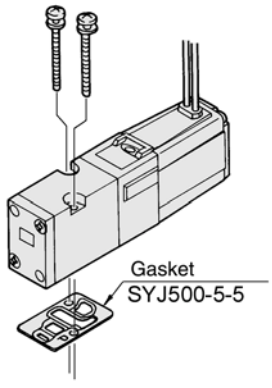

Applicable base
Sub-plate
VV3Z3-40-□2
VV3Z3-40-□1
VV3Z3-40R-□2
VV3Z3-40R-□1
} Manifold base

Blank Plate Assembly

DXT200-8-1A

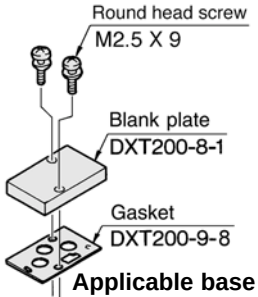

Applicable base
Sub-plate
VV3Z3-40-□2
VV3Z3-40-□1
VV3Z3-40R-□2
VV3Z3-40R-□1
} Manifold base

Model No.: DXT170-25-1A

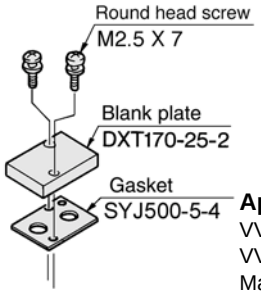

Applicable base
VV3Z3-20-□1
VV3Z3-21R-□1
Manifold base

chanhvinh.com

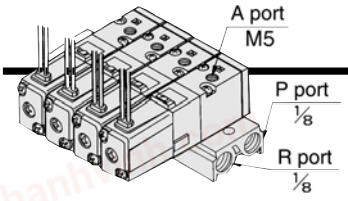

For Internal Pilot
20 Type Manifold: Top Ported

How to Order

E VV3Z3 − 20 − 05 1 − □ − Q

Ordering source area code

Code	areas
–	Japan,Asia Australia,England
E	Europe
N	North America

Stations

02	2 stations
⋮	⋮
20	20 stations

P, R port thread

–	Rc (PT)
00F	G (PF)
00N	NPT
00T	NPTF

Note) If more than 6 stations, supply air to P port on both sides of the manifold and exhaust from R port on both sides of the manifold.

Note) If > 6 stations, supply air to P port on both sides of the manifold and exhaust from R port on both sides of the manifold.

Applicable solenoid valve

VZ312-□□□□-M5-Q
VZ312M-□□□□-M5-Q
VZ322-□□□□-M5-Q
VZ322M-□□□□-M5-Q

Applicable blank plate assembly

DXT170-25-1A

Grommet (G), (H)

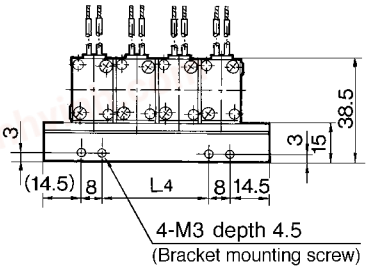

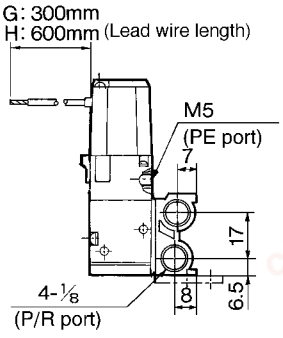

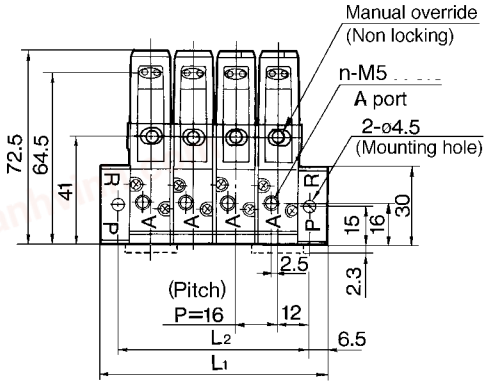

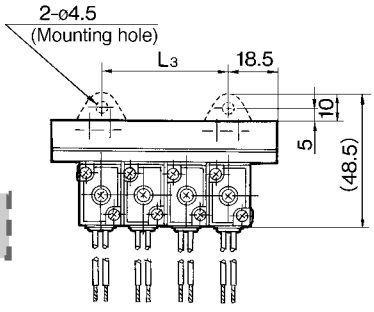

Note: This valve series is now only available with DIN connector.

Station	2	3	4	5	6	7	8	9	10	11	12	13	14	15	16	17	18	19	20
L1	53	69	85	101	117	133	149	165	181	197	213	229	245	261	277	293	309	325	341
L2	40	56	72	88	104	120	136	152	168	184	200	216	232	248	264	280	296	312	328
L3	16	32	48	64	80	96	112	128	144	160	176	192	208	224	240	256	272	288	304
L4	8	24	40	56	72	88	104	120	136	152	168	184	200	216	232	248	264	280	296

L plug connector (L)

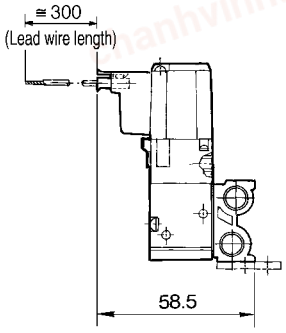

M plug connector (M)

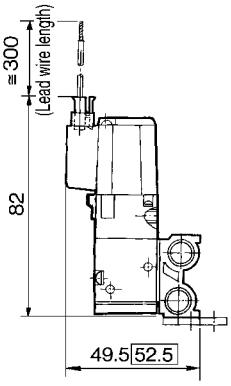

DIN terminal (D)

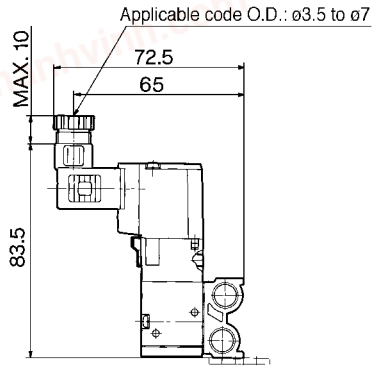

□: with indicator light and surge voltage suppressor

chanhvinh.com

VZ300

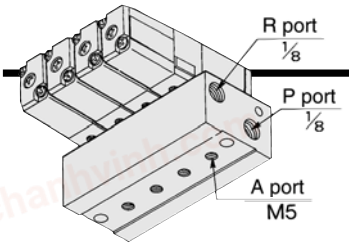

For Internal Pilot
40 Type Manifold: Bottom Ported

How to Order

E VV3Z3 – 40 – 05 2 – M5 □ – Q

Ordering source area code

Code	areas
–	Japan,Asia Australia,England
E	Europe
N	North America

Stations

02	2 stations
⋮	⋮
20	20 stations

A port size

M5	M5 X 0.8

P, R port thread

–	Rc (PT)
F	G (PF)
N	NPT
T	NPTF

Note) If more than 9 stations, supply air to P port on both sides of the manifold and exhaust from R port on both sides of the manifold.

Note) If > 9 stations, supply air to P port on both sides of the manifold and exhaust from R port on both sides of the manifold.

Applicable solenoid valve
VZ314-□□□□-Q
VZ314M-□□□□-Q
VZ324-□□□□-Q
VZ324M-□□□□-Q

Applicable blank plate assembly
DXT200-8-1A

Note: This valve series is now only available with DIN connector.

Grommet (G), (H)

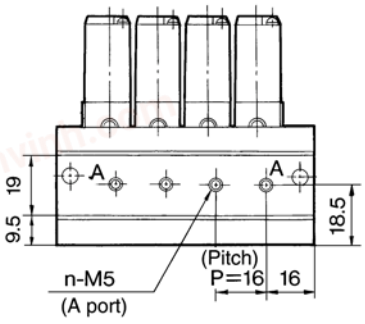

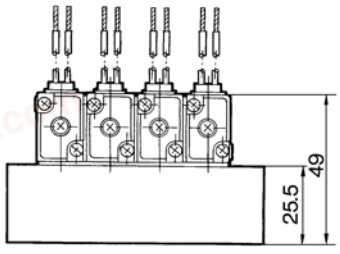

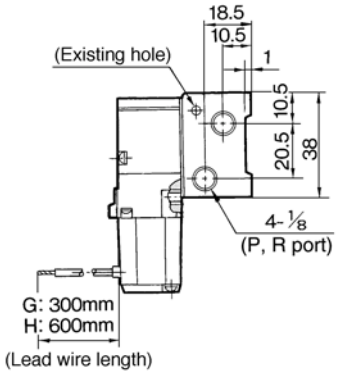

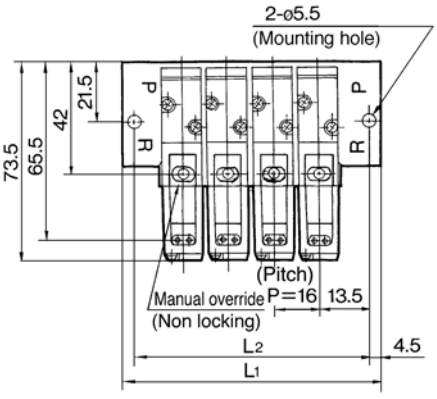

Station	2	3	4	5	6	7	8	9	10	11	12	13	14	15	16	17	18	19	20
L1	52	68	84	100	116	132	148	164	180	196	212	228	244	260	276	292	308	324	340
L2	43	59	75	91	107	123	139	155	171	187	203	219	235	251	267	283	299	315	331

L plug connector (L)

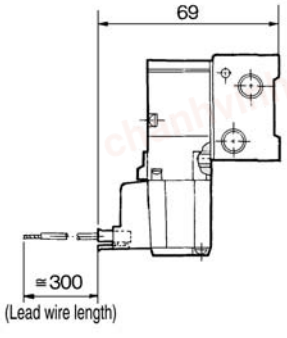

M plug connector (M)

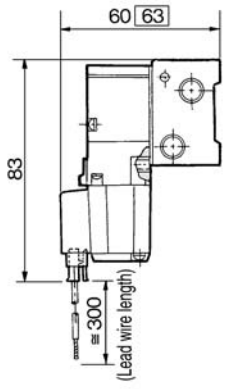

DIN terminal (D)

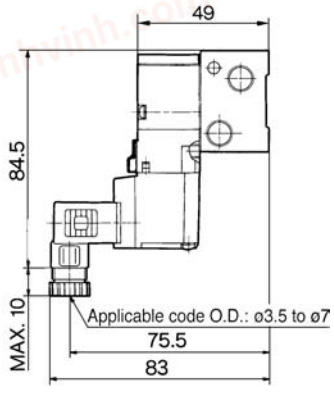

□: with indicator light and surge voltage suppressor

chanhvinh.com

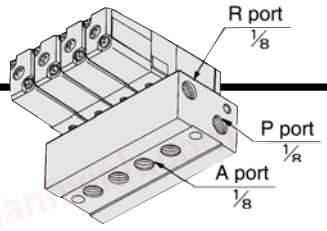

For Internal Pilot
40 Type Manifold: Bottom Ported

How to Order

E VV3Z3 – 40 – 05 2 – 01 □ – Q

Ordering source area code

Code	areas
–	Japan,Asia Australia,England
E	Europe
N	North America

Stations

02	2 stations
⋮	⋮
20	20 stations

A port size

01	1/8

P, R port thread

–	Rc (PT)
F	G (PF)
N	NPT
T	NPTF

Note) If more than 9 stations, supply air to P port on both sides of the manifold and exhaust from R port on both sides of the manifold.

Note) If > 9 stations, supply air to P port on both sides of the manifold and exhaust from R port on both sides of the manifold.

Applicable solenoid valve
VZ314-□□□□-Q
VZ314M-□□□□-Q
VZ324-□□□□-Q
VZ324M-□□□□-Q

Applicable blank plate assembly
DXT200-8-1A

Note: This valve series is now only available with DIN connector.

Grommet (G), (H)

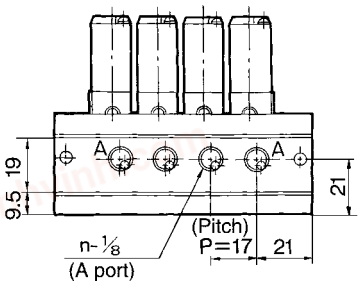

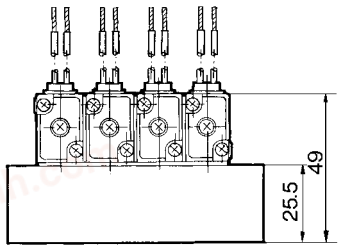

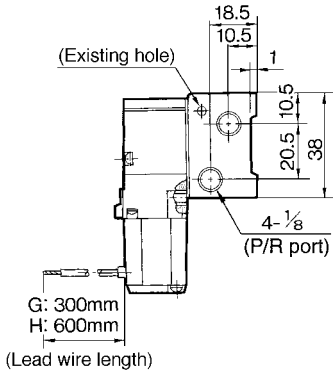

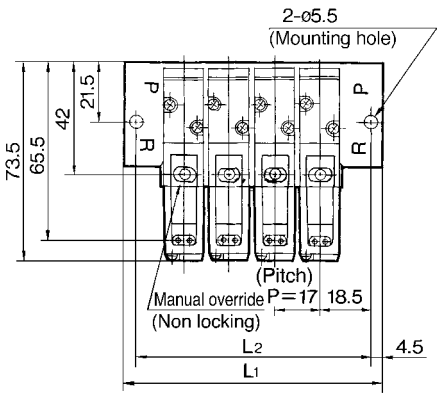

Station	2	3	4	5	6	7	8	9	10	11	12	13	14	15	16	17	18	19	20
L1	63	80	97	114	131	148	165	182	199	216	233	250	267	284	301	318	335	352	369
L2	54	71	88	105	122	139	156	173	190	207	224	241	258	275	292	309	326	343	360

L plug connector (L)

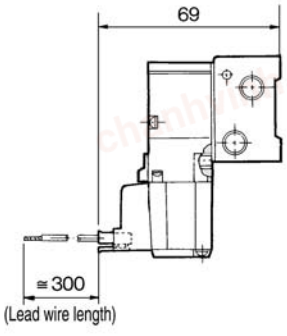

M plug connector (M)

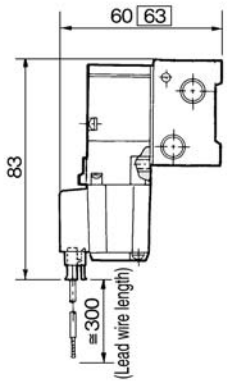

DIN terminal (D)

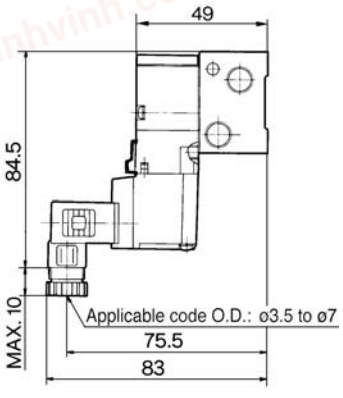

□: with indicator light and surge voltage suppressor

chanhvinh.com

VZ300

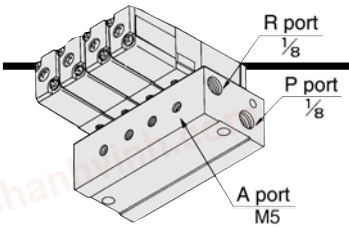

For Internal Pilot
40 Type Manifold: Side Ported

How to Order

E VV3Z3 – 40 – 05 1 – M5 □ – Q

Ordering source area code

Code	areas
–	Japan,Asia Australia,England
E	Europe
N	North America

Stations

02	2 stations
⋮	⋮
20	20 stations

A port size

M5	M5 X 0.8

P, R port thread

–	Rc (PT)
F	G (PF)
N	NPT
T	NPTF

Note) If more than 9 stations, supply air to P port on both sides of the manifold and exhaust from R port on both sides of the manifold.

Note) If > 9 stations, supply air to P port on both sides of the manifold and exhaust from R port on both sides of the manifold.

Applicable solenoid valve
VZ314-□□□□-Q
VZ314M-□□□□-Q
VZ324-□□□□-Q
VZ324M-□□□□-Q

Applicable blank plate assembly
DXT200-8-1A

Grommet (G), (H)

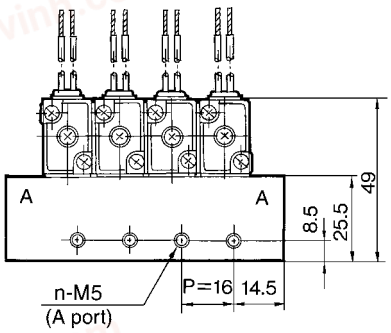

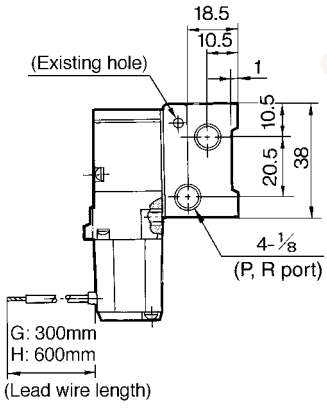

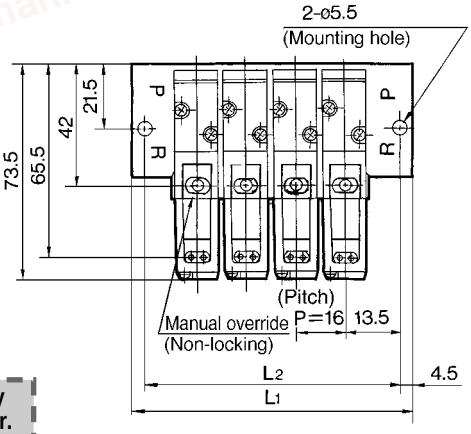

Note: This valve series is now only available with DIN connector.

Station	2	3	4	5	6	7	8	9	10	11	12	13	14	15	16	17	18	19	20
L1	52	68	84	100	116	132	148	164	180	196	212	228	244	260	276	292	308	324	340
L2	43	59	75	91	107	123	139	155	171	187	203	219	235	251	267	283	299	315	331

L plug connector (L)

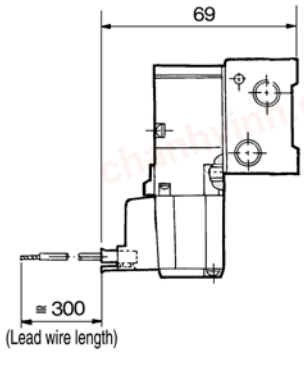

M plug connector (M)

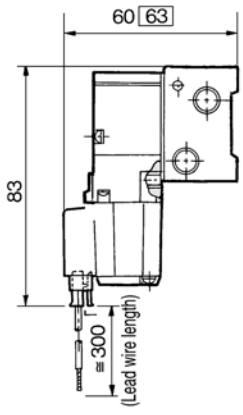

DIN terminal (D)

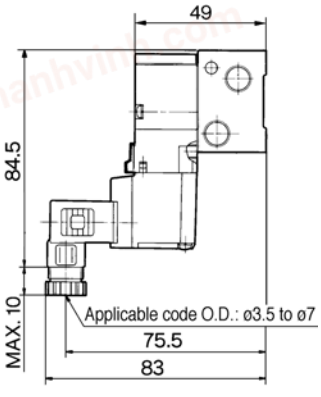

□: with indicator light and surge voltage suppressor

chanhvinh.com

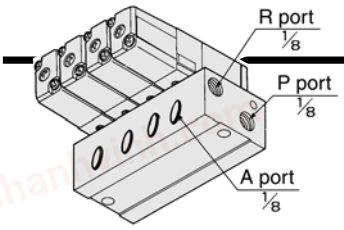

For Internal Pilot
40 Type Manifold: Side Ported

How to Order

E VV3Z3 – 40 – 05 1 – 01 – Q

Ordering source area code

Code	areas
–	Japan,Asia Australia,England
E	Europe
N	North America

Stations

02	2 stations
⋮	⋮
20	20 stations

A port size

01	1/8

P, R port thread

–	Rc (PT)
F	G (PF)
N	NPT
T	NPTF

Note) If more than 9 stations, supply air to P port on both sides of the manifold and exhaust from R port on both sides of the manifold.

Note) If > 9 stations, supply air to P port on both sides of the manifold and exhaust from R port on both sides of the manifold.

Applicable solenoid valve
VZ314-□□□□-Q
VZ314M-□□□□-Q
VZ324-□□□□-Q
VZ324M-□□□□-Q

Applicable blank plate assembly
DXT200-8-1A

Note: This valve series is now only available with DIN connector.

Grommet (G) (H)

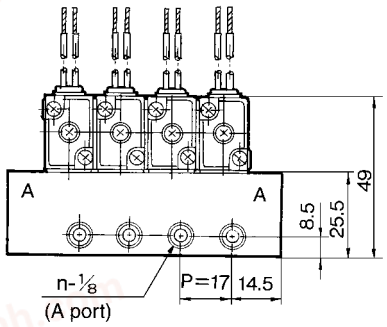

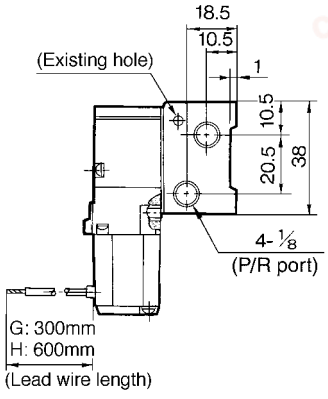

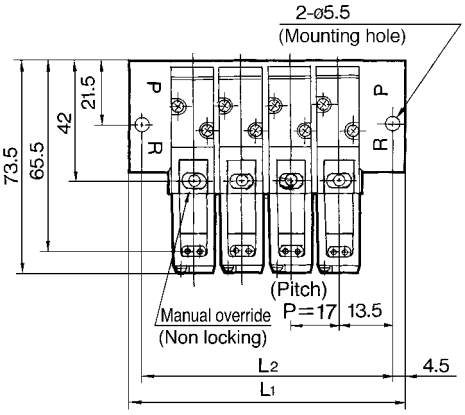

Station	2	3	4	5	6	7	8	9	10	11	12	13	14	15	16	17	18	19	20
L1	53	70	87	104	121	138	155	172	189	206	223	240	257	274	291	308	325	342	359
L2	44	61	78	95	112	129	146	163	180	197	214	231	248	265	282	299	316	333	350

L plug connector (L)

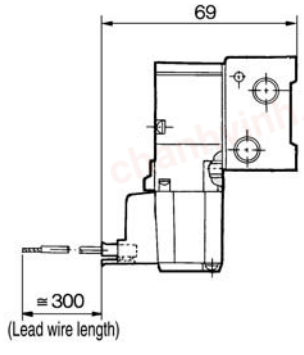

M plug connector (M)

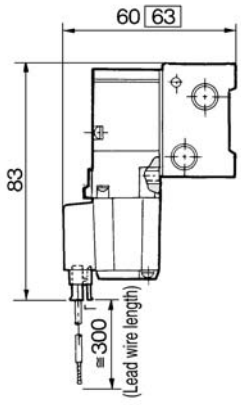

DIN terminal (D)

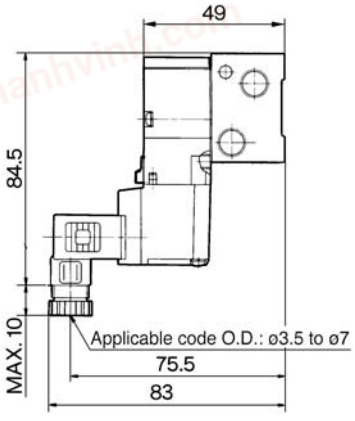

: with indicator light and surge voltage suppressor

chanhvinh.com

VZ300

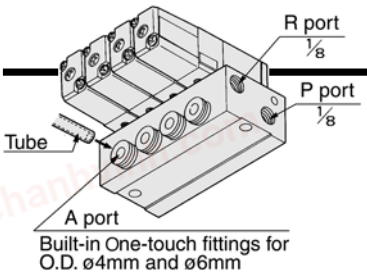

For Internal Pilot
40 Type Manifold: Side Ported

How to Order

E VV3Z3 – 40 – 05 1 – C6 – Q

Stations

02	2 stations
⋮	⋮
20	20 stations

P, R port thread

–	Rc (PT)
F	G (PF)
N	NPT
T	NPTF

Note) If more than 9 stations, supply air to P port on both sides of the manifold and exhaust from R port on both sides of the manifold.

A port size

C4	ø4 One-touch fitting
C6	ø6 One-touch fitting

Ordering source area code

Code	areas
–	Japan,Asia Australia,England
E	Europe
N	North America

Note) If > 9 stations, supply air to P port on both sides of the manifold and exhaust from R port on both sides of the manifold.

Applicable solenoid valve

VZ314-□□□□-Q
VZ314M-□□□□-Q
VZ324-□□□□-Q
VZ324M-□□□□-Q

Applicable blank plate assembly

DXT200-8-1A

Grommet (G), (H)

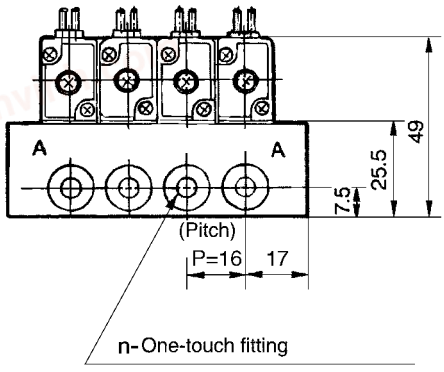

Applicable tube model C4: T0425
C6: T0604

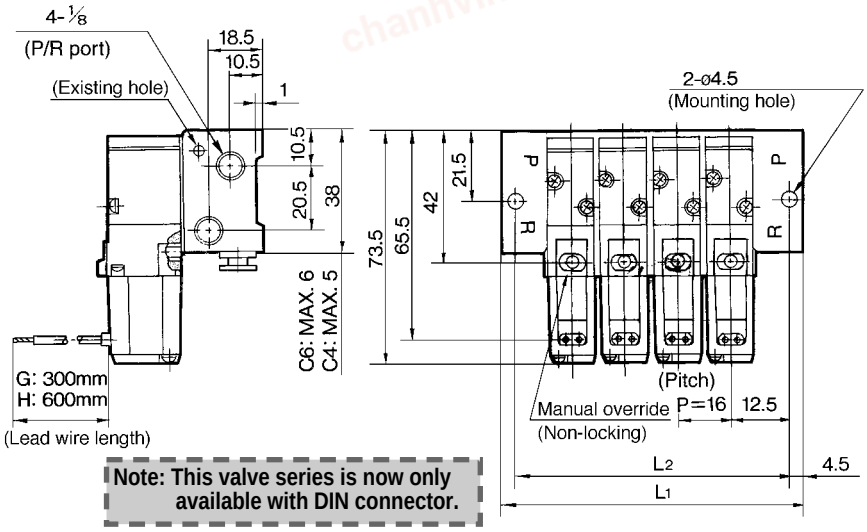

Note: This valve series is now only available with DIN connector.

Station	2	3	4	5	6	7	8	9	10	11	12	13	14	15	16	17	18	19	20
L1	50	66	82	98	114	130	146	162	178	194	210	226	242	258	274	290	306	322	338
L2	41	57	73	89	105	121	137	153	169	185	201	217	233	249	265	281	297	313	329

L plug connector (L)

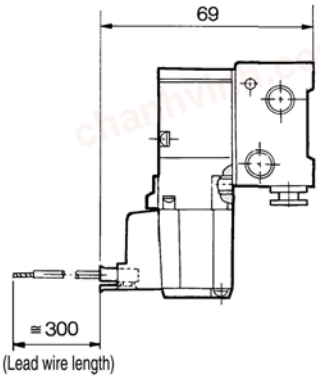

M plug connector (M)

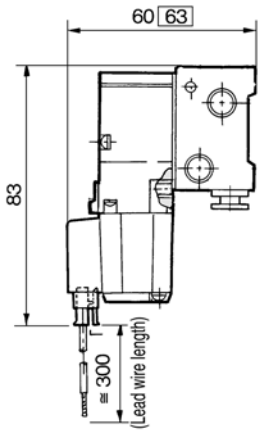

DIN terminal (D)

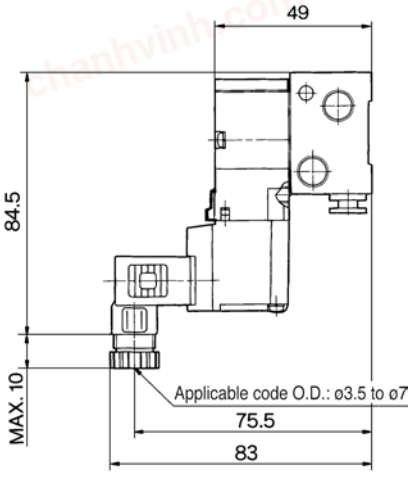

▭: with indicator light and surge voltage suppressor

chanhvinh.com

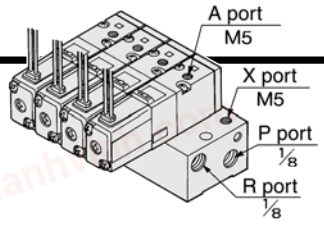

For External Pilot
21R Type Manifold: Top Ported

How to Order

E VV3Z3 – 21R – 05 1 ☐ – Q

Ordering source area code

Code	areas
–	Japan,Asia Australia,England
E	Europe
N	North America

Stations

02	2 stations
⋮	⋮
20	20 stations

P, R port thread

–	Rc (PT)
00F	G (PF)
00N	NPT
00T	NPTF

Note) If more than 9 stations, supply and exhaust air through P port or R port on both sides of the manifold.

Note) If > 9 stations, supply and exhaust air through P port or R port on both sides of the manifold.

Applicable solenoid valve
VZ312R-□□□□-M5-Q
VZ322R-□□□□-M5-Q

Applicable blank plate assembly
DXT200-8-1A

Grommet (G), (H)

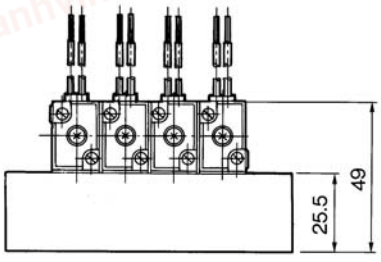

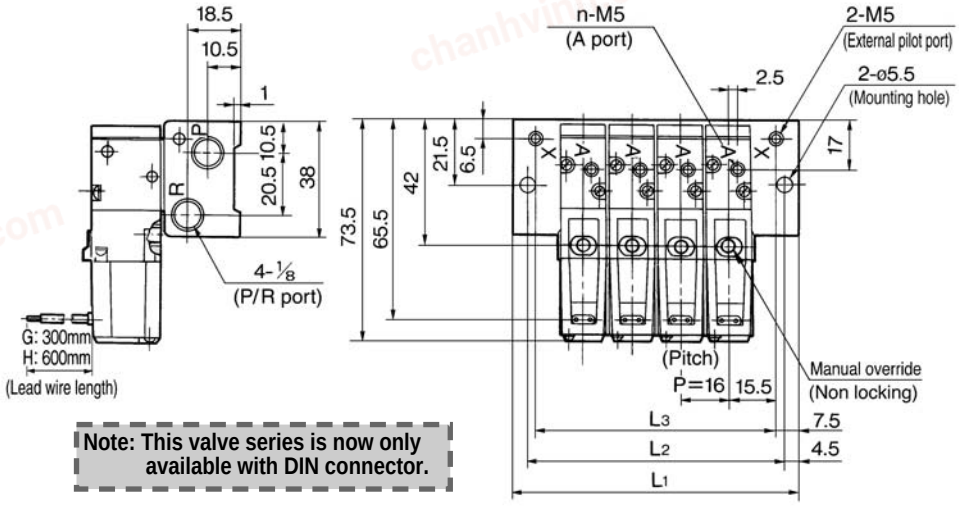

Note: This valve series is now only available with DIN connector.

Station	2	3	4	5	6	7	8	9	10	11	12	13	14	15	16	17	18	19	20
L1	62	78	94	110	126	142	158	174	190	206	222	238	254	270	286	302	318	334	350
L2	53	69	85	101	117	133	149	165	181	197	213	229	245	261	277	293	309	325	341
L3	47	63	79	95	111	127	143	159	175	191	207	223	239	255	271	287	303	319	335

L plug connector (L)

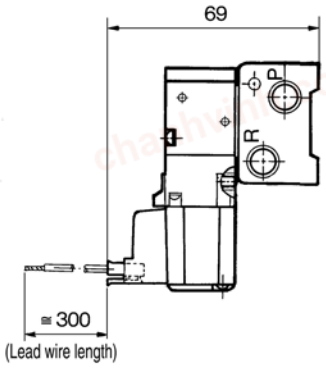

M plug connector (M)

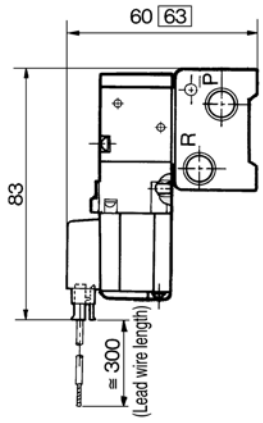

DIN terminal (D)

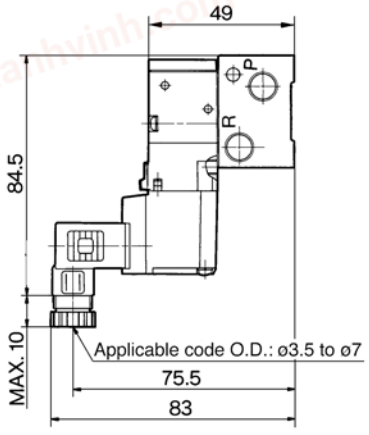

☐: with indicator light and surge voltage suppressor

chanhvinh.com

VZ300

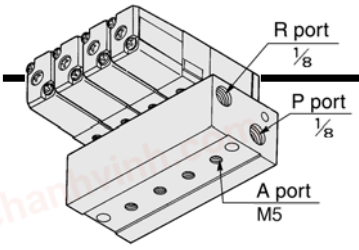

For External Pilot
40R Type Manifold: Bottom Ported

How to Order

E VV3Z3 – 40R – 05 2 – M5 □ – Q

Ordering source area code

Code	areas
–	Japan,Asia Australia,England
E	Europe
N	North America

Stations

02	2 stations
⋮	⋮
20	20 stations

A port size

M5	M5 X 0.8

P, R port thread

–	Rc (PT)
F	G (PF)
N	NPT
T	NPTF

Note) If more than 9 stations, supply and exhaust air through P port or R port on both sides of the manifold.

Note) If > 9 stations, supply and exhaust air through P port or R port on both sides of the manifold.

Applicable solenoid valve
VZ314R-□□□□-Q
VZ324R-□□□□-Q

Applicable blank plate assembly
DXT200-8-1A

Note: This valve series is now only available with DIN connector.

Grommet (G) (H)

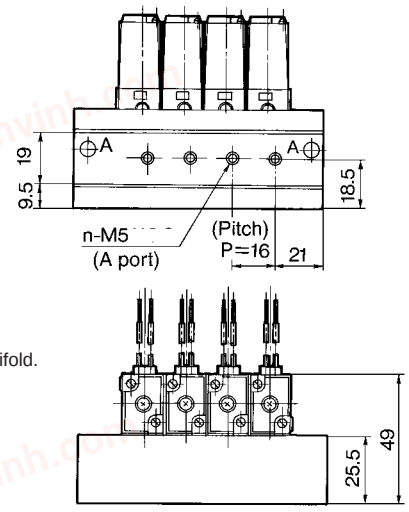

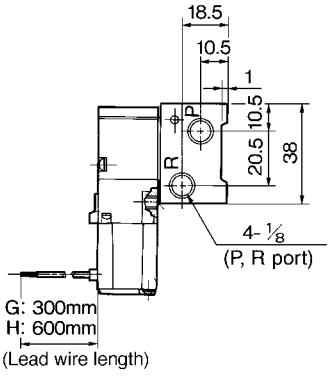

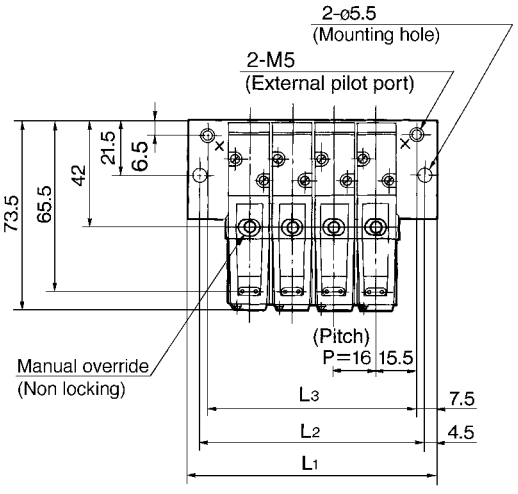

Station	2	3	4	5	6	7	8	9	10	11	12	13	14	15	16	17	18	19	20
L1	62	78	94	110	126	142	158	174	190	206	222	238	254	270	286	302	318	334	350
L2	53	69	85	101	117	133	149	165	181	197	213	229	245	261	277	293	309	325	341
L3	47	63	79	95	111	127	143	159	175	191	207	223	239	255	271	287	303	319	335

L plug connector (L)

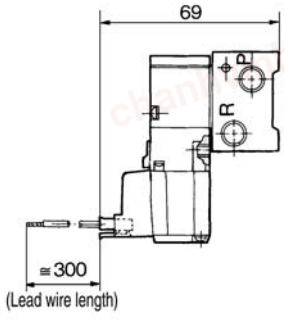

M plug connector (M)

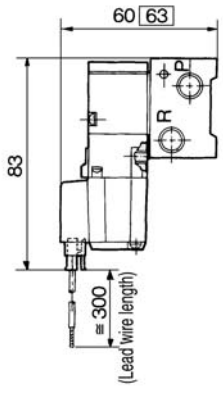

DIN terminal (D)

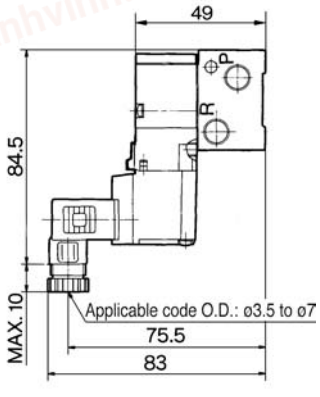

□: with indicator light and surge voltage suppressor

chanhvinh.com

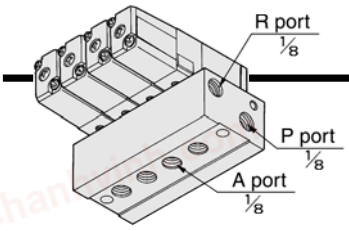

For External Pilot
40R Type Manifold: Bottom Ported

How to Order

E VV3Z3 – 40R – [ ] 2 – 01 [ ] – Q

Ordering source area code

Code	areas
–	Japan,Asia Australia,England
E	Europe
N	North America

Note) If > 9 stations, supply and exhaust air through P port or R port on both sides of the manifold.

Stations

02	2 stations
⋮	⋮
20	20 stations

A port size

01	1/8

P, R port thread

–	Rc (PT)
F	G (PF)
N	NPT
T	NPTF

Note) If > 9 stations, supply and exhaust air through P port or R port on both sides of the manifold.

Applicable solenoid valve
VZ314R-□□□□-Q
VZ324R-□□□□-Q

Applicable blank plate assembly
DXT200-8-1A

Note: This valve series is now only available with DIN connector.

Grommet (G), (H)

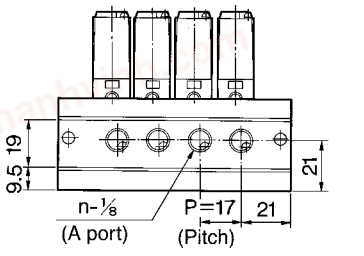

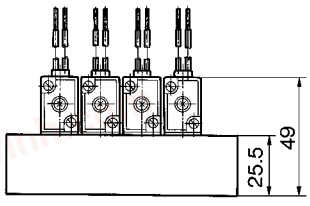

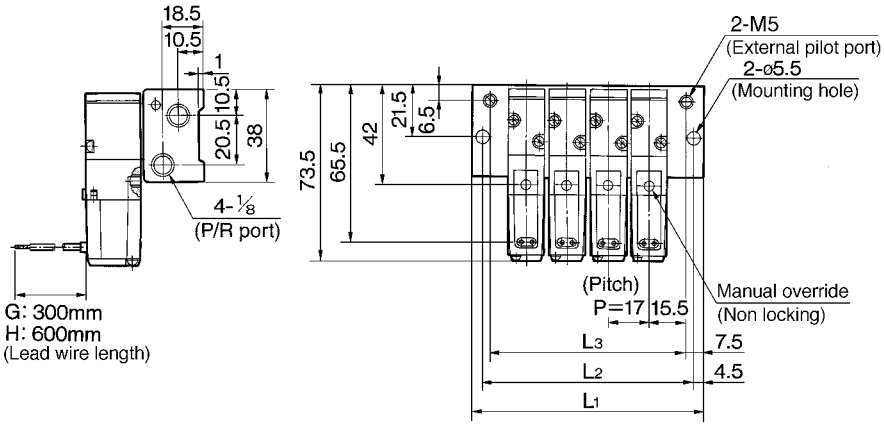

Station	2	3	4	5	6	7	8	9	10	11	12	13	14	15	16	17	18	19	20
L1	63	80	97	114	131	148	165	182	199	216	233	250	267	284	301	318	335	352	369
L2	54	71	88	105	122	139	156	173	190	207	224	241	258	275	292	309	326	343	360
L3	48	65	82	99	116	133	150	167	184	201	218	235	252	269	286	303	320	337	354

L plug connector (L)

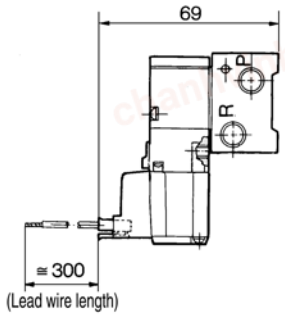

M plug connector (M)

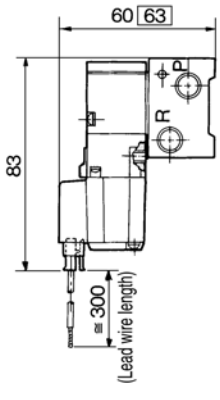

DIN terminal (D)

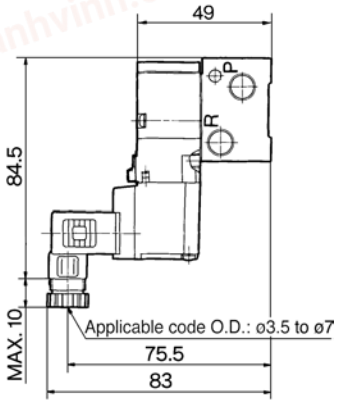

▭: with indicator light and surge voltage suppressor

chanhvinh.com

VZ300

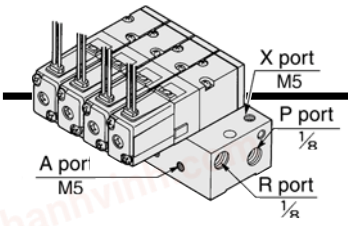

For External Pilot
40R Type Manifold: Side Ported

How to Order

E VV3Z3 – 40R – 05 1 – M5 □ – Q

Ordering source area code

Code	areas
–	Japan,Asia Australia,England
E	Europe
N	North America

Note) If > 9 stations, supply and exhaust air through P port or R port on both sides of the manifold.

Stations

02	2 stations
⋮	⋮
20	20 stations

A port size

M5	M5 X 0.8

P, R port thread

–	Rc (PT)
F	G (PF)
N	NPT
T	NPTF

Note) If > 9 stations, supply and exhaust air through P port or R port on both sides of the manifold.

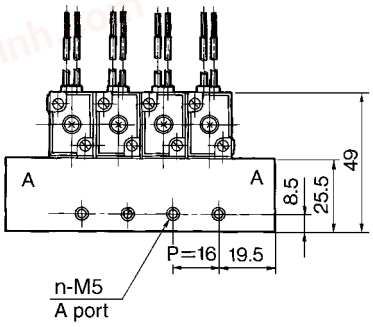

Applicable solenoid valve
VZ314R-□□□□-Q
VZ324R-□□□□-Q

Applicable blank plate assembly
DXT200-8-1A

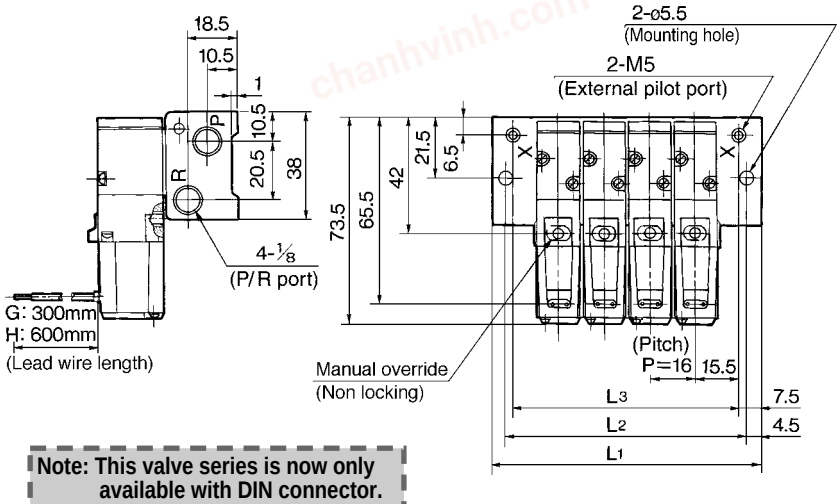

Note: This valve series is now only available with DIN connector.

Station	2	3	4	5	6	7	8	9	10	11	12	13	14	15	16	17	18	19	20
L1	62	78	94	110	126	142	158	174	190	206	222	238	254	270	286	302	318	334	350
L2	53	69	85	101	117	133	149	165	181	197	213	229	245	261	277	293	309	325	341
L3	47	63	79	95	111	127	143	159	175	191	207	223	239	255	271	287	303	319	335

L plug connector (L)

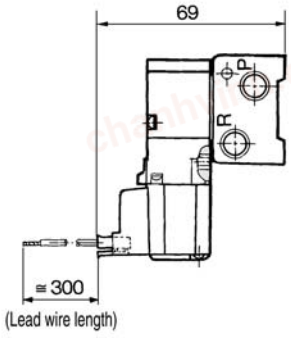

M plug connector (M)

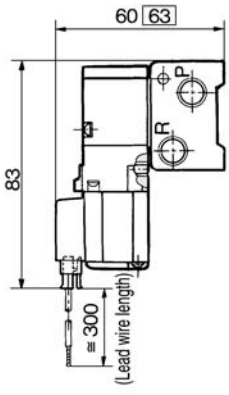

DIN terminal (D)

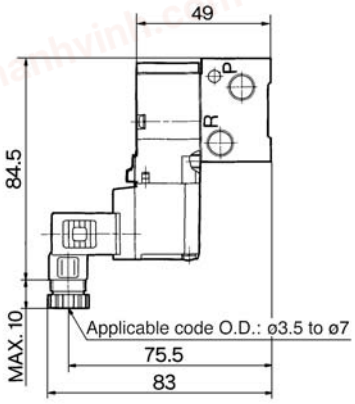

□: with indicator light and surge voltage suppressor

chanhvinh.com

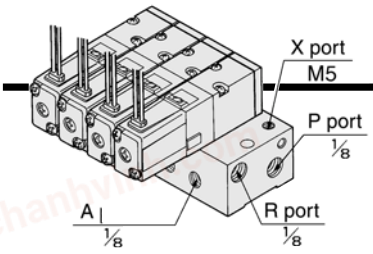

For External Pilot
40R Type Manifold: Side Ported

How to Order

E VV3Z3 – 40R – 05 1 – 01 □ – Q

Ordering source area code

Code	areas
–	Japan,Asia Australia,England
E	Europe
N	North America

Note) If > 9 stations, supply and exhaust air through P port or R port on both sides of the manifold.

Stations

02	2 stations
⋮	⋮
20	20 stations

A port size

01	1/8

P, R port thread

–	Rc (PT)
F	G (PF)
N	NPT
T	NPTF

Note) If > 9 stations, supply and exhaust air through P port or R port on both sides of the manifold.

Applicable solenoid valve
VZ314R-□□□□-Q
VZ324R-□□□□-Q

Applicable blank plate assembly
DXT200-8-1A

Grommet (G), (H)

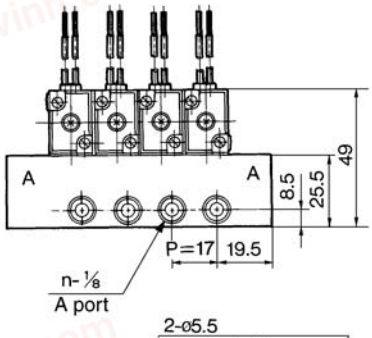

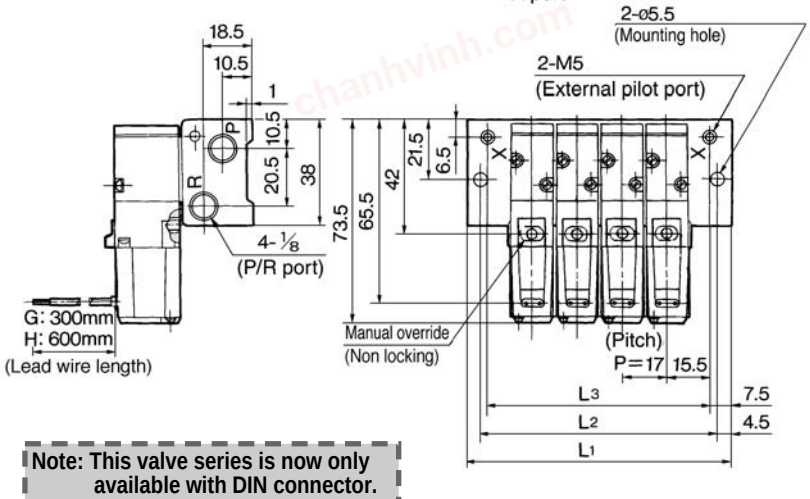

Note: This valve series is now only available with DIN connector.

Station	2	3	4	5	6	7	8	9	10	11	12	13	14	15	16	17	18	19	20
L1	63	80	97	114	131	148	165	182	199	216	233	250	267	284	301	318	335	352	369
L2	54	71	88	105	122	139	156	173	190	207	224	241	258	275	292	309	326	343	360
L3	48	65	82	99	116	133	150	167	184	201	218	235	252	269	286	303	320	337	354

L plug connector (L)

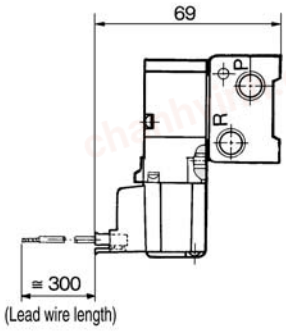

M plug connector (M)

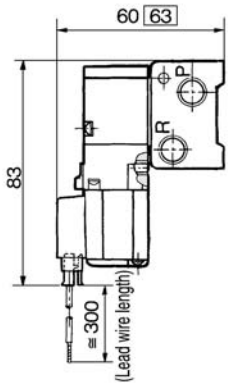

DIN terminal (D)

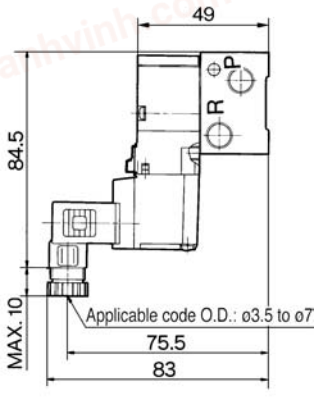

□: with indicator light and surge voltage suppressor

chanhvinh.com

VZ300

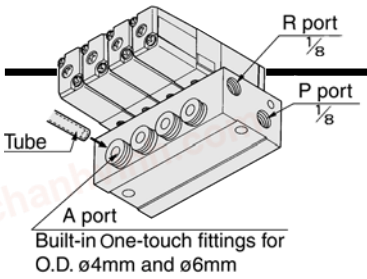

For External Pilot
40R Type Manifold: Side Ported

How to Order

E VV3Z3 − 40R − 05 1 − C6 □ − Q

Stations

02	2 stations
⋮	⋮
20	20 stations

A port size

C4	ø4 One-touch fitting
C6	ø6 One-touch fitting

P, R port thread

–	Rc (PT)
F	G (PF)
N	NPT
T	NPTF

Note) If > 9 stations, supply and exhaust air through P port or R port on both sides of the manifold.

Ordering source area code

Code	areas
–	Japan,Asia Australia,England
E	Europe
N	North America

Note) If > 9 stations, supply and exhaust air through P port or R port on both sides of the manifold.

Applicable solenoid valve
VZ314R-□□□□-Q
VZ324R-□□□□-Q

Applicable blank plate assembly
DXT200-8-1A

Grommet (G), (H)

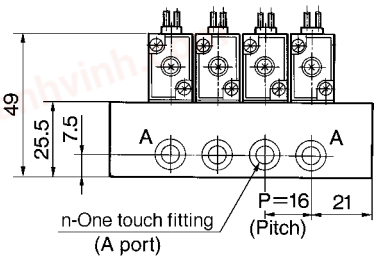

Applicable tube model
C4: T0425
C6: T0604

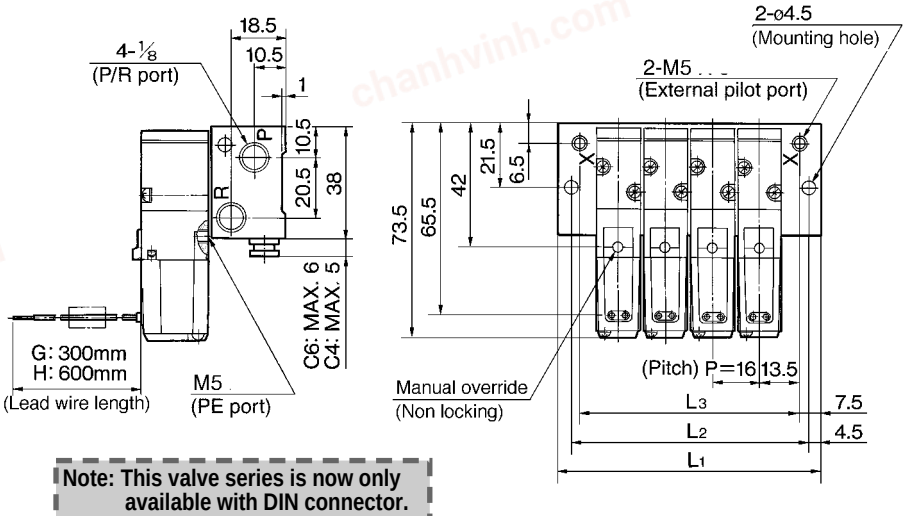

Note: This valve series is now only available with DIN connector.

Station	2	3	4	5	6	7	8	9	10	11	12	13	14	15	16	17	18	19	20
L1	58	74	90	106	122	138	154	170	186	202	218	234	250	266	282	298	314	330	346
L2	49	65	81	97	113	129	145	161	177	193	209	225	241	257	273	289	305	321	337
L3	43	59	75	91	107	123	139	155	171	187	203	219	235	251	267	283	299	315	331

L plug connector (L)

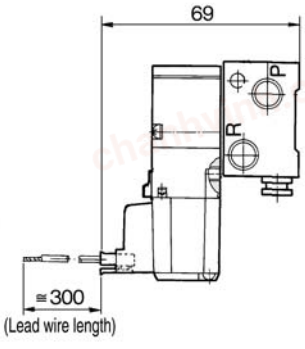

M plug connector (M)

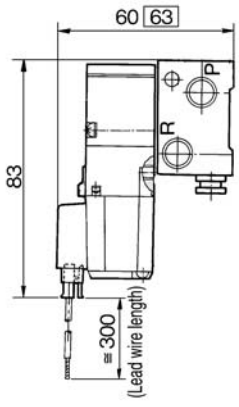

DIN terminal (D)

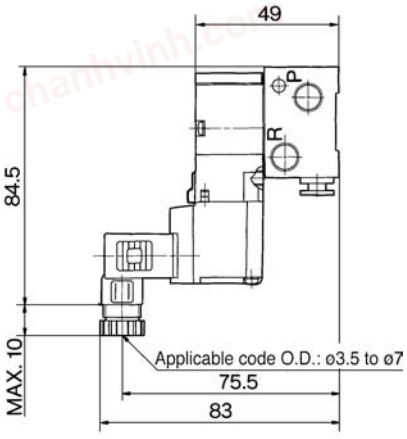

□: with indicator light and surge voltage suppressor

chanhvinh.com

3 Port Body Ported, Base Mounted Rubber Seal

Series VZ500

How to Order

Ordering source area code

Code	areas
-	Japan, Asia Australia, England
E	Europe
N	North America

Port size

01	1/8

Option

F: With foot bracket

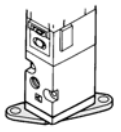

Note) · The bracket is not assembled.
· Except for external pilot.

	Actuation	Body option	Rated voltage	Electrical entry	Indicator light and surge voltage suppressor	Manual override	Port size	Option	
Body Ported	VZ5	1	2	5	D			01	Q
Base Mounted	VZ5	1	4	5	D				Q

Actuation

1	Normally closed 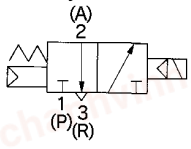
2	Normally open 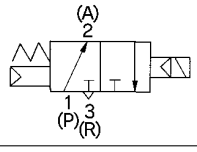

Thread

—	Rc (PT)
N	NPT
T	NPTF
F	G (PF)

Port size

01: 1/8 With sub-plate
02: 1/4 With sub-plate
–: Without sub-plate

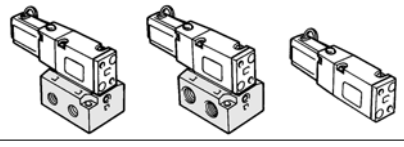

Manual override

–: Non-locking push style
B: Locking slotted style
C: Locking knob style

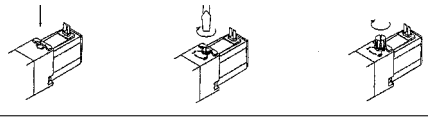

Body option

–: Individual pilot exhaust style
M: Common exhaust (pilot and main valve) style
R: External pilot style(1)

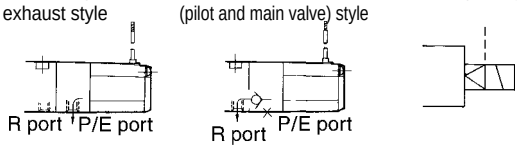

Note 1) VZ5□2R is only for manifold.

Indicator light and surge voltage suppressor

–	None
Z*	Indicator light and surge voltage suppressor
S	Surge voltage suppressor

*Not available for DOZ

Rated voltage

1	100V AC 50/60Hz
2	200V AC 50/60Hz
3	110V AC 50/60Hz
4	220V AC 50/60Hz
5	24V DC
6	12V DC
9	Others

Order Made Contact SMC for other voltages (9)

Electrical entry

DIN terminal
D:With connector 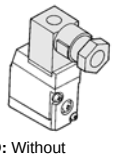
DO: Without connector 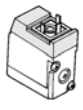

chanhvinh.com

VZ500

Low Power Consumption: 1.8WDC

Applicable for Vacuum Use –100kPa

500R: External pilot style

Exhaust measures for the pilot valve are unnecessary

500M: Central exhaust style

It is not necessary to take exhaust measures for the pilot valve for environmental protection.

Can also be used as a selector valve of a divider valve.

500R: External pilot style

Can be used for universal porting.



Body Ported



Base Mounted

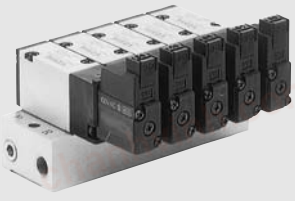

Refer to p.2.4-34 to 2.4-44 for manifold use.

Specifications

Fluid		Air
Operating pressure range (MPa)	Internal pilot	0.15 to 0.7
Ambient and fluid temperature (˚C)		Max. 50
Response time ms {0.5MPa} (1)		20 or less
Max. operating frequency (Hz)		10
Effective area		See below
Manual override (2)		Non-locking push style, Locking slotted style, Locking knob style
Pilot exhaust		Individual pilot exhaust, Common exhaust (pilot and main valve)
Lubrication		Non-lube
Mounting position		Free
Impact/vibration resistance (m/s^2) (3)		300/50
Protection structure		Dust proof

Note 1) According to dynamic performance test of JIS B8374-1981. (Coil temperature 20˚C, rated voltage, without surge voltage suppressor)

Note 2) When operating the locking style manually, apply torque of 0.2Nm or less.

Note 3) Impact resistance: No malfunction from test using drop impact tester, to axis and right angle directions of main valve and armature, each one time when energized and de-energized. (Value in the initial stage.)

Vibration resistance: No malfunction from test with 8.3 to 2000Hz 1 sweep, to axis and right angle directions of main valve and armature, each one time when energized and de-energized. (Value in the initial stage.)

Solenoid Specifications

∗Option

Electrical entry			DIN Terminal (D)
Coil rated voltage V	AC50/60Hz		100, 200, 24*, 48*, 110*, 220*
	DC		24, 6*, 12*, 48*
Allowable voltage %			–15 to +10% of rated voltage
Power consumption W [Current mA] (1)	DC		1.8(With light 2.1) [24V DC: 75(With light 87.5)]
Apparent power VA [Current mA] (1)	AC	Inrush	4.5/50Hz, 4.2/60Hz [100V AC: 45/50Hz, 42/60Hz; 200V AC: 22.5/50Hz, 21/60Hz]
		Holding	3.5/50Hz, 3/60Hz [100V AC: 35/50Hz, 30/60Hz; 200V AC: 17.5/50Hz, 15/60Hz]
Surge voltage suppressor			DC: Diode, AC: ZNR
Indicator light			DC: LED(red), AC: Neon light

Note 1) At rated voltage

Effective Area and Weight

Valve		Actuation	Port size	Effective area (mm^2) (Nℓ/min)	Weight (g)
Body Ported	**VZ512**	N.C.	1/8	9.0 (490.75)	110
	VZ522	N.O.			
Base Mounted (With sub-plate)	**VZ514**	N.C.	1/8, 1/4	9.0 (490.75)	160 (Without sub-plate 110)
	VZ524	N.O.			

Option

Description	Part No.	Note
Foot bracket	DXT201-19-1A	With screw (for VZ5□2)

chanhvinh.com

External Pilot: VZ500R

This obtains external pressure for the pilot valve separarely from the main valve pressure. It can be operated with a low pressure line with a vacuum (to –100kPa) or below 0.15MPa.

Specifications

Applicable model	Base mounted (VZ314R, VZ324R)	
Operating pressure range MPa	Main pressure	–100kPa to 0.7
	External pilot pressure	0.15 to 0.7

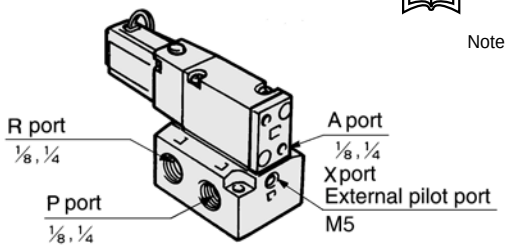

Note 1) Refer to the p.2.4-34 for manifold base.

Note 2) In the case of the body ported style, the pilot style (VZ3□2R) is used exclusively on a manifold. An external pilot style that can be used individually is available as an Order Made specification.

JIS symbol

VZ51□R

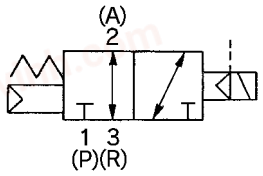

VZ52□R

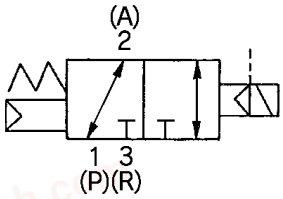

Construction

N.C.

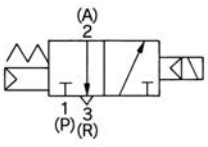

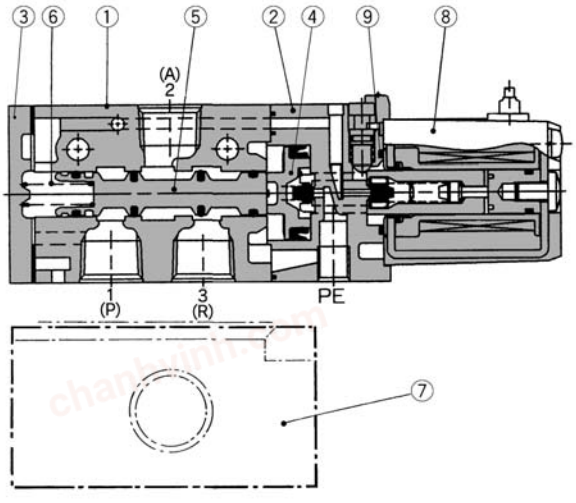

N.O.

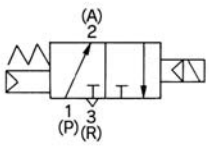

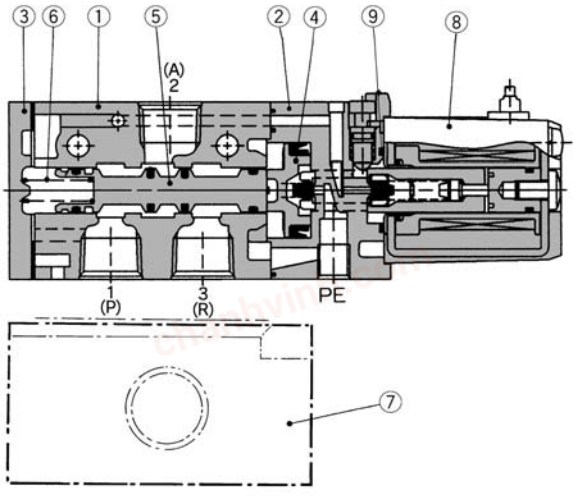

Component Parts

No.	Description	Material	Note
①	Body	Aluminium die cast	Platinum silver
②	Piston plate	Resin	Black
③	End cover	Aluminium die cast	Black
④	Piston	Resin	—
⑤	Spool valve ass'y	—	—
⑥	Spool spring	Stainless steel	—

Replacement Parts

No.	Description	Material	Part No.	Note
⑦	Sub-plate	Aluminium die cast	DXT201-2-1P	1/8
			DXT201-2-2P	1/4
⑧	Solenoid ass'y	Epoxy, stainless steel		
⑨	O ring	NBR	13 X 11 X 1	Common with VZ100

chanhvinh.com

VZ500



Body Ported

Grommet (G), (H)
VZ5□2-□$^{G}_{H}$□□-01

Note: This valve series is now only available with DIN connector.

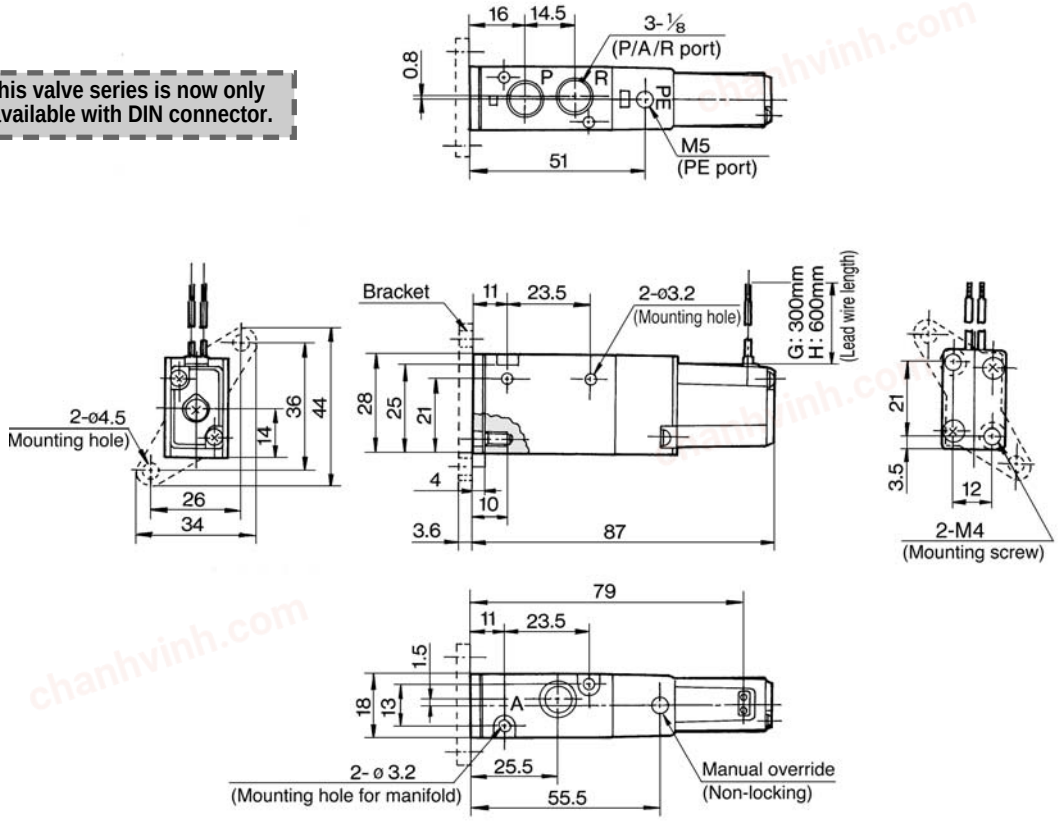

L plug connector (L)
VZ5□2-□L□□-01

M plug connector (M)
VZ5□2-□M□□-01

DIN terminal (D)
VZ5□2-□D□□-01-Q

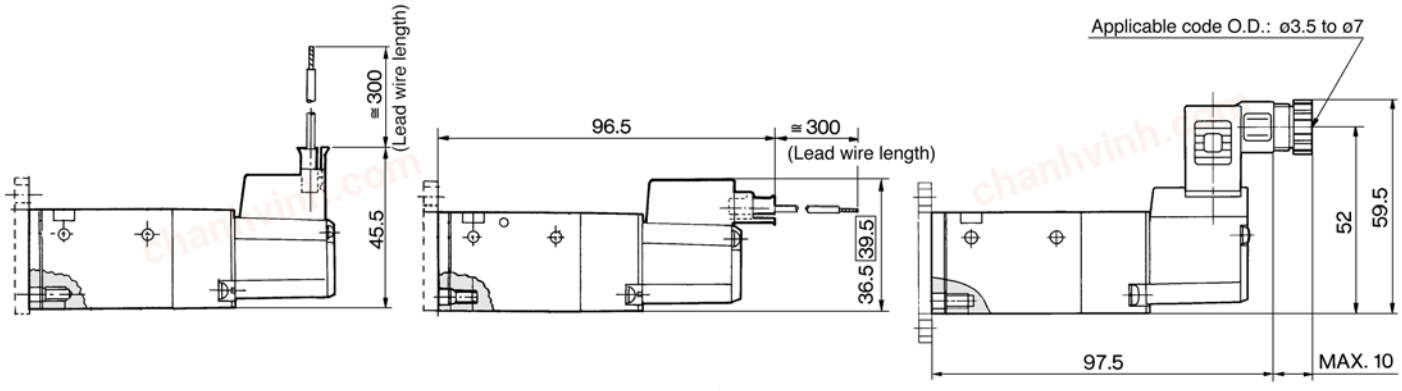

: with indicator light and surge voltage suppressor

chanhvinh.com



Base Mounted

Grommet (G), (H)
VZ5□4-□$^{G}_{H}$□□-$^{01}_{02}$

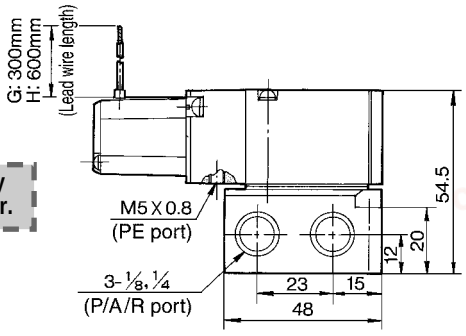

Note: This valve series is now only available with DIN connector.

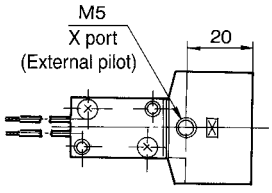

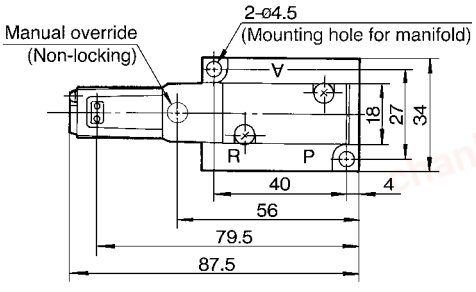

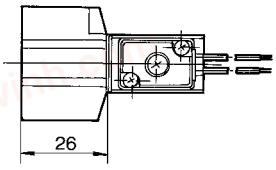

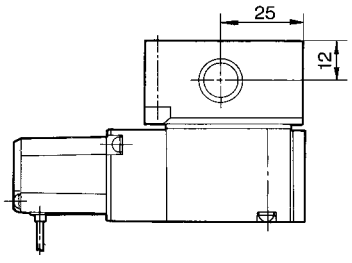

L plug connector (L)
VZ5□4-□L□□-$^{01}_{02}$

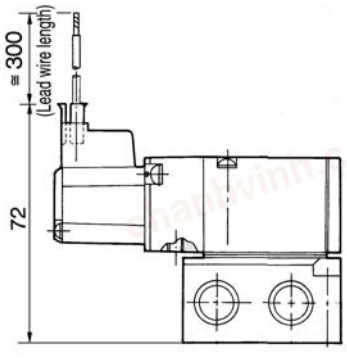

M plug connector (M)
VZ5□4-□M□□-$^{01}_{02}$

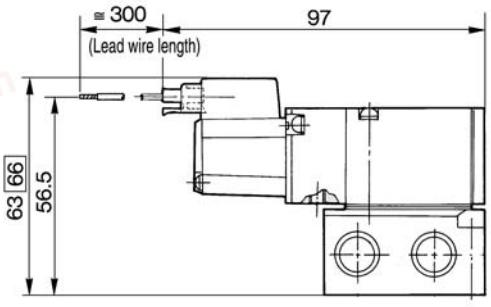

DIN terminal (D)
VZ5□4-□D□□-$^{01}_{02}$ -Q

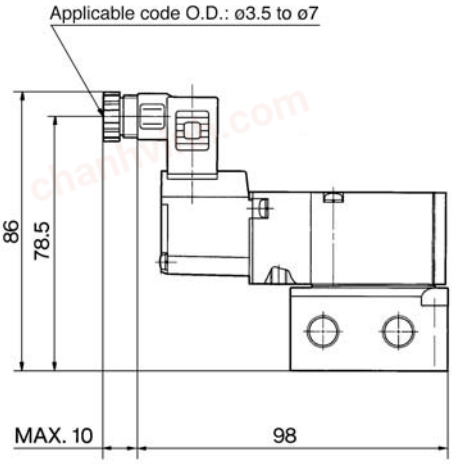

: with indicator light and surge voltage suppressor

chanhvinh.com

Series VZ500
Manifold

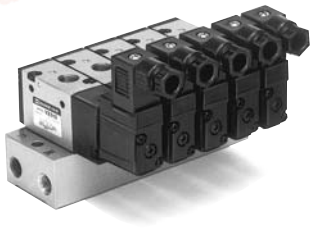

Manifold Specifications

Model	Internal pilot	20- □1	21- □1	40- □2	41- □2	41- □1
	External pilot	–	21R- □1	–	41R- □2	41R- □1
Manifold		Single base/B mount				
P(SUP)/R(EXH) style		Common SUP/Common EXH				
Stations		2 to 20 stations				
A port piping	Position	Valve	Valve	Base	Base	Base
	Direction	Top	Top	Bottom	Bottom	Side
Port size	P/R port	1/8	1/4	1/8	1/4	1/4
	A port	1/8	1/8	1/8	1/8	1/8 C6 (ø6 One-touch fitting) C8 (ø8 One-touch fitting)
	X port (1)	–	M5	–	M5	M5
Valve effective area mm²(Cv) (2)	Body ported VZ5□2/VZ5□2R	10.6(0.59)		–		
	Base mounted VZ5□4/VZ5□4R	–		10.2(0.57)	10.2(0.57)	1/8: 9.2(0.51) C6: 8.8(0.49) C8: 10(0.56)
Page on How to Order	Internal pilot	p.2.4-35	p.2.4-36	p.2.4-37	p.2.4-38	p.2.4-39, 2.4-40
	External pilot	–	p.2.4-41	–	p.2.4-42	p.2.4-43, 2.4-44

Note 1) Only for external pilot
Note 2) Value at manifold base mounted

How to Order Manifold Base

To order valves and blank plate assembly mounted onto the manifold, list valves and blank plate assembly with manifold base.
(Sample)
VV3Z5-20-031-Q···1 pc. (Manifold base)
VZ512-5D-01-Q·····2 pcs. (Valve)
DXT201-15-1A·····1 pc. Blank plate ass'y)

Option

Combinations of solenoid valve, manifold gasket and manifold base

Body ported (VZ5□2)

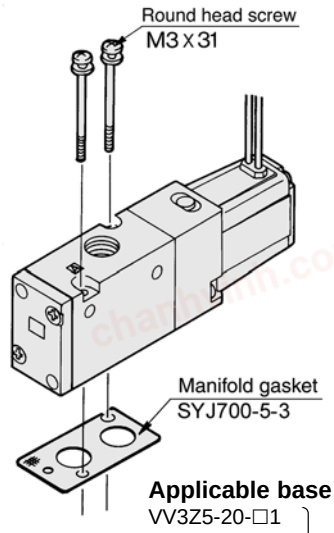

Applicable base
VV3Z5-20-□1
VV3Z5-21-□1
VV3Z5-21R-□1
} Manifold base

Base mounted (VZ5□4)

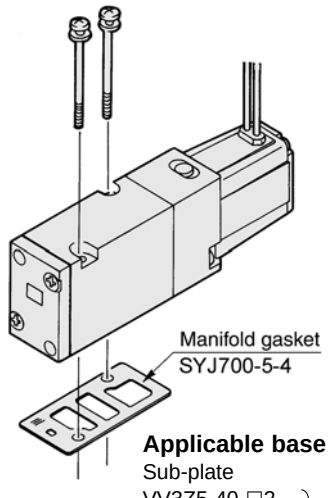

Applicable base
Sub-plate
VV3Z5-40-□2
VV3Z5-41-□2
VV3Z5-41-□1
VV3Z5-41R-□2
VV3Z5-41R-□1
} Manifold base

Blank plate Assembly

DXT201-15-1A

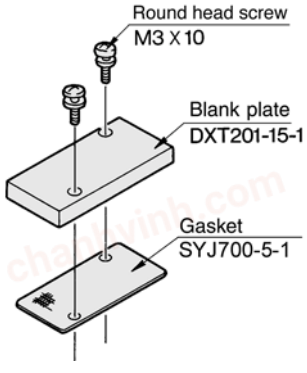

chanhvinh.com

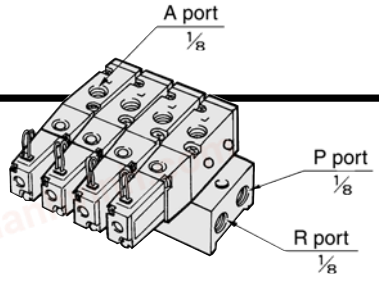

For Internal Pilot
20 Type Manifold: Top Ported

How to Order

E VV3Z5 – 20 – 05 1 – ☐ – Q

Ordering source area code

Code	areas
–	Japan,Asia Australia,England
E	Europe
N	North America

Stations

02	2 stations
⋮	⋮
20	20 stations

P, R port thread

–	Rc (PT)
00F	G (PF)
00N	NPT
00T	NPTF

Note) If more than 6 stations, supply air to P port on both sides of the manifold and exhaust from R port on both sides of the manifold.

Note) If > 6 stations, supply air to P port on both sides of the manifold and exhaust from R port on both sides of the manifold.

Applicable solenoid valve
VZ512-□□□□-01-Q
VZ512M-□□□□-01-Q
VZ522-□□□□-01-Q
VZ522M-□□□□-01-Q

Applicable blank plate assembly
DXT201-15-1A

Note: This valve series is now only available with DIN connector.

Grommet (G), (H)

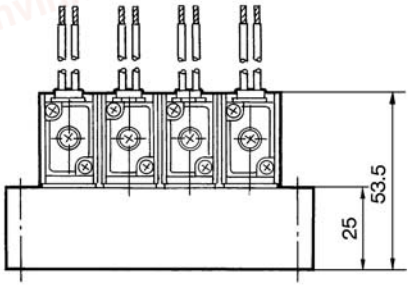

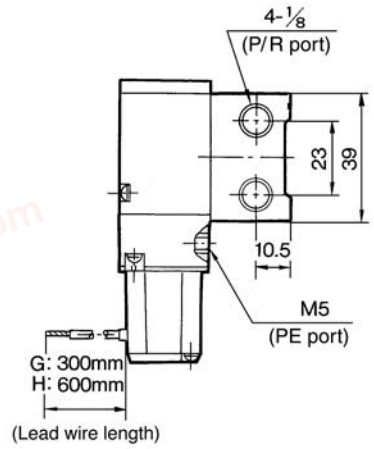

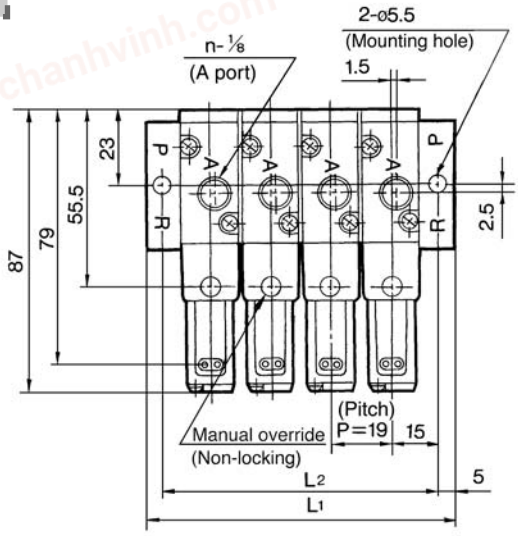

Station	2	3	4	5	6	7	8	9	10	11	12	13	14	15	16	17	18	19	20
L1	59	78	97	116	135	154	173	192	211	230	249	268	287	306	325	344	363	382	401
L2	49	68	87	106	125	144	163	182	201	220	239	258	277	296	315	334	353	372	391

L plug connector (L)

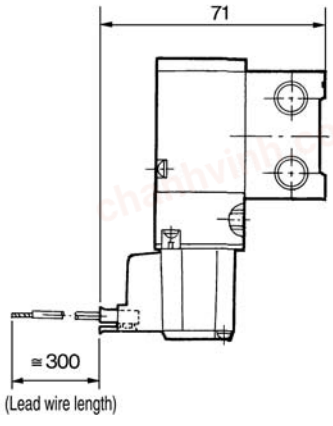

M plug connector (M)

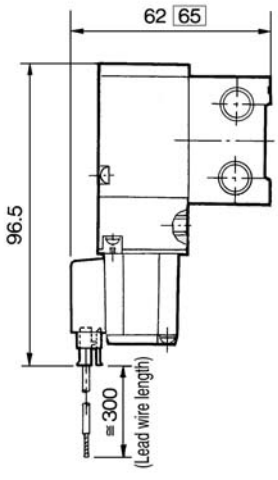

DIN terminal (D)

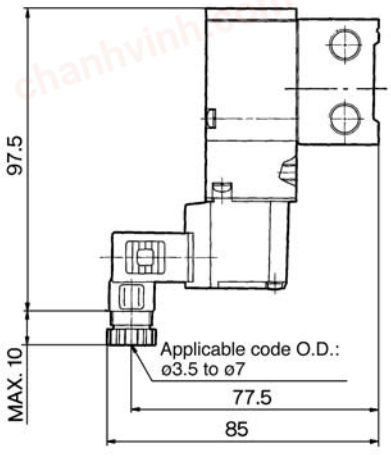

☐: with indicator light and surge voltage suppressor

chanhvinh.com

VZ500

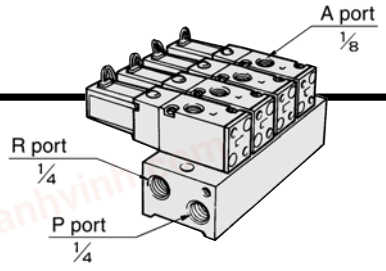

For Internal Pilot
21 Type Manifold: Top Ported

How to Order

E VV3Z5 – 21 – 05 1 – ☐ – Q

Ordering source area code

Code	areas
–	Japan,Asia Australia,England
E	Europe
N	North America

Stations

02	2 stations
⋮	⋮
20	20 stations

P, R port thread

–	Rc (PT)
00F	G (PF)
00N	NPT
00T	NPTF

Note) If more than 9 stations, supply air to P port on both sides of the manifold and exhaust from R port on both sides of the manifold.

Note) If there are more than 9 stations, supply air to P port on both sides of the manifold and exhaust from R port on both sides of the manifold.

Applicable solenoid valve
VZ512-□□□□-01-Q
VZ512M-□□□□-01-Q
VZ522-□□□□-01-Q
VZ522M-□□□□-01-Q

Applicable blank plate assembly
DXT201-15-1A

Grommet (G), (H)

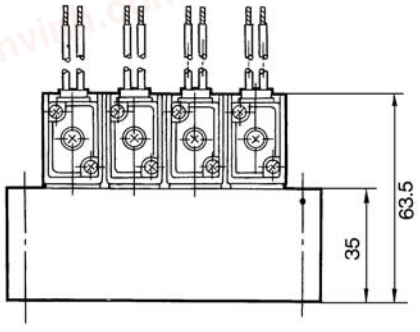

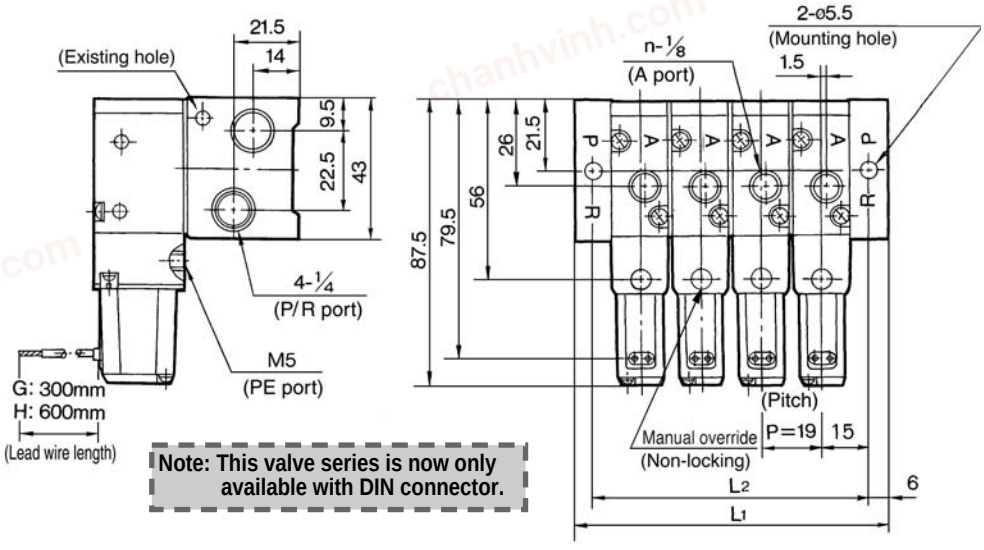

Note: This valve series is now only available with DIN connector.

Station	2	3	4	5	6	7	8	9	10	11	12	13	14	15	16	17	18	19	20
L1	61	80	99	118	137	156	175	194	213	232	251	270	289	308	327	346	365	384	403
L2	49	68	87	106	125	144	163	182	201	220	239	258	277	296	315	334	353	372	391

L plug connector (L)

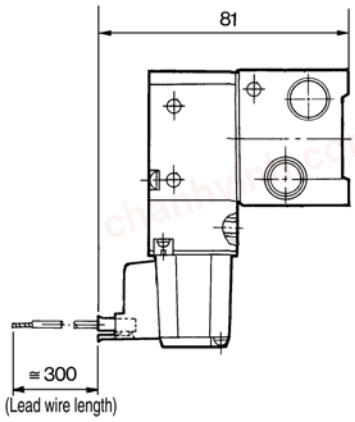

M plug connector (M)

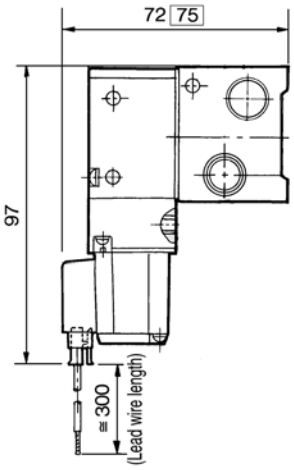

DIN terminal (D)

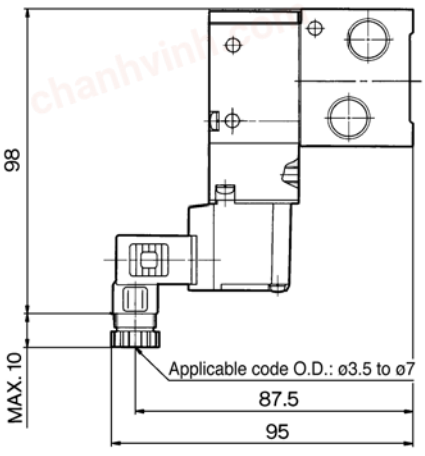

☐: with indicator light and surge voltage suppressor

chanhvinh.com

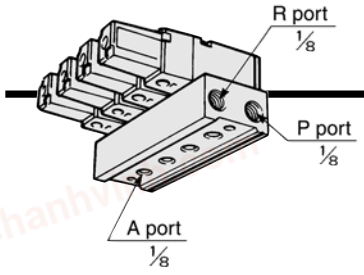

For Internal Pilot
40 Type Manifold: Bottom Ported

How to Order

E VV3Z5 − 40 − 05 2 − 01 □ − Q

Ordering source area code

Code	areas
–	Japan,Asia Australia,England
E	Europe
N	North America

Stations

02	2 stations
⋮	⋮
20	20 stations

A port size

01	1/8

P, R port thread

–	Rc (PT)
F	G (PF)
N	NPT
T	NPTF

Note) If more than 6 stations, supply air to P port on both sides of the manifold and exhaust from R port on both sides of the manifold.

Note) If > 6 stations, supply air to P port on both sides of the manifold and exhaust from R port on both sides of the manifold.

Applicable solenoid valve

VZ514-□□□□-Q
VZ514M-□□□□-Q
VZ524-□□□□-Q
VZ524M-□□□□-Q

Applicable blank plate assembly

DXT201-15-1A

Note: This valve series is now only available with DIN connector.

Grommet (G), (H)

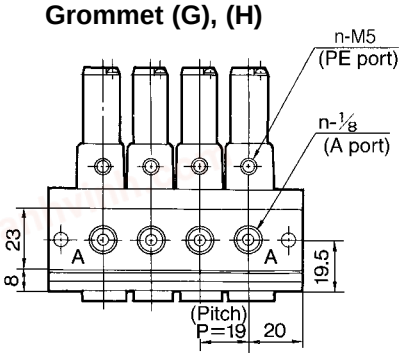

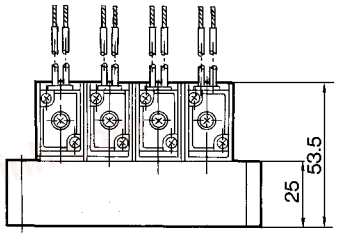

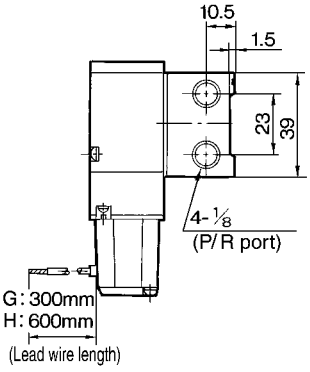

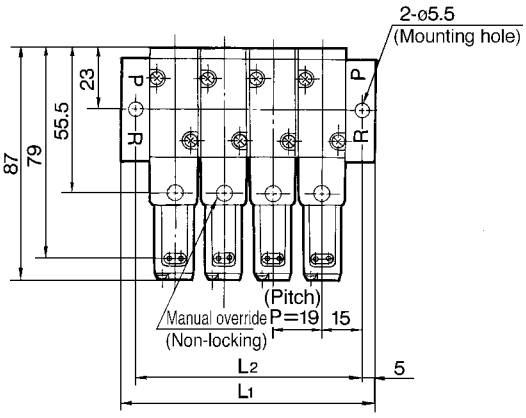

Station	2	3	4	5	6	7	8	9	10	11	12	13	14	15	16	17	18	19	20
L1	59	78	97	116	135	154	173	192	211	230	249	268	287	306	325	344	363	382	401
L2	49	68	87	106	125	144	163	182	201	220	239	258	277	296	315	334	353	372	391

L plug connector (L)

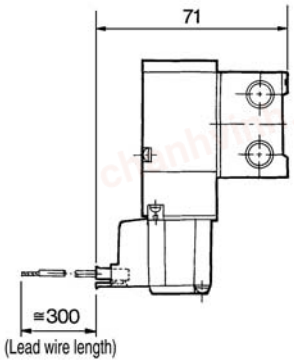

M plug connector (M)

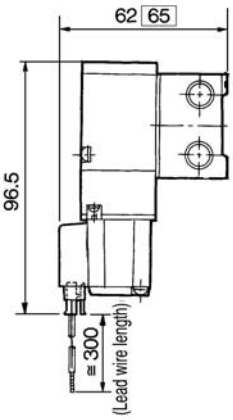

DIN terminal (D)

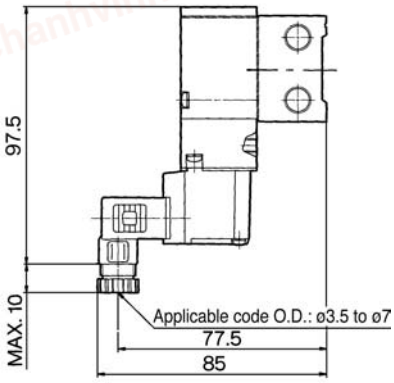

: with indicator light and surge voltage suppressor

chanhvinh.com

VZ500

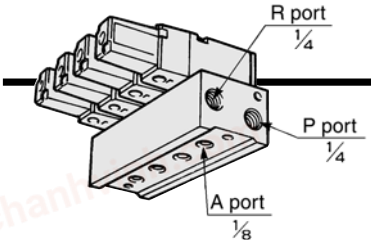

For Internal Pilot
41 Type Manifold: Bottom Ported

How to Order

E VV3Z5 − 41 − 05 2 − 01 □ − Q

Ordering source area code

Code	areas
–	Japan,Asia Australia,England
E	Europe
N	North America

Stations

02	2 stations
⋮	⋮
20	20 stations

A port size

01	1/8

P, R port thread

–	Rc (PT)
F	G (PF)
N	NPT
T	NPTF

Note) If more than 9 stations, supply air to P port on both sides of the manifold and exhaust from R port on both sides of the manifold.

Note) If > 9 stations, supply air to P port on both sides of the manifold and exhaust from R port on both sides of the manifold.

Applicable solenoid valve
VZ514-□□□□-Q
VZ514M-□□□□-Q
VZ524-□□□□-Q
VZ524M-□□□□-Q

Applicable blank plate assembly
DXT201-15-1A

Note: This valve series is now only available with DIN connector.

Grommet (G), (H)

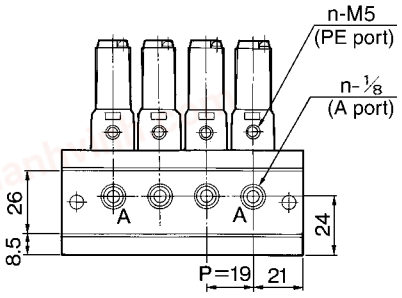

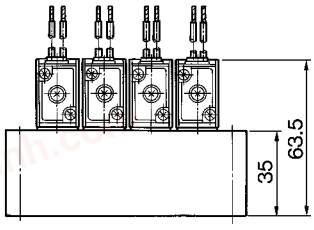

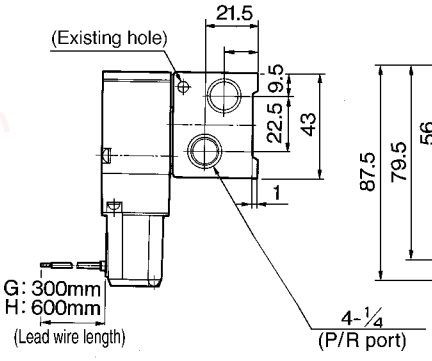

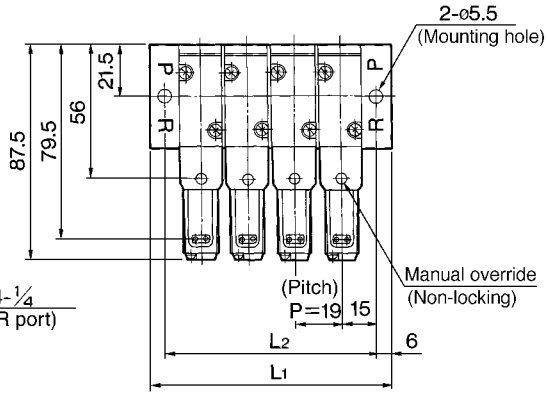

Station	2	3	4	5	6	7	8	9	10	11	12	13	14	15	16	17	18	19	20
L1	61	80	99	118	137	156	175	194	213	232	251	270	289	308	327	346	365	384	403
L2	49	68	87	106	125	144	163	182	201	220	239	258	277	296	315	334	353	372	391

L plug connector (L)

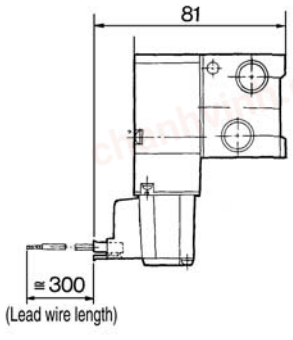

M plug connector (M)

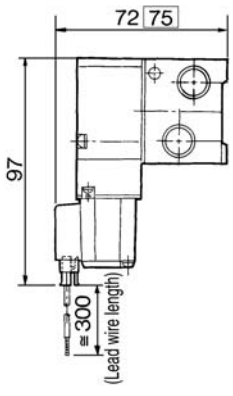

DIN terminal (D)

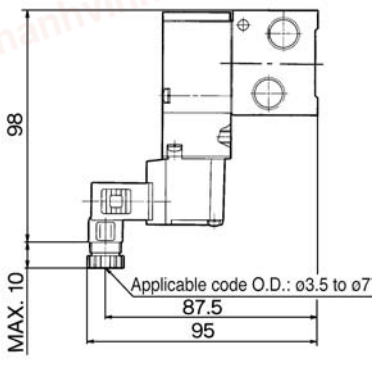

: with indicator light and surge voltage suppressor

chanhvinh.com

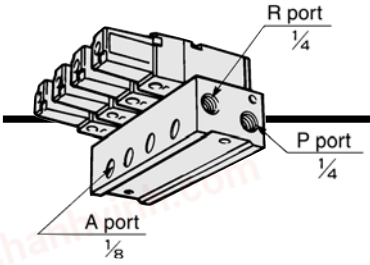

For Internal Pilot
41 Type Manifold: Side Ported

How to Order

E VV3Z5 − 41 − 05 1 − 01 □ − Q

Ordering source area code

Code	areas
–	Japan,Asia Australia,England
E	Europe
N	North America

Stations

02	2 stations
⋮	⋮
20	20 stations

A port size

01	1/8

P, R port thread

–	Rc (PT)
F	G (PF)
N	NPT
T	NPTF

Note) If more than 9 stations, supply air to P port on both sides of the manifold and exhaust from R port on both sides of the manifold.

Note) If > 9 stations, supply air to P port on both sides of the manifold and exhaust from R port on both sides of the manifold.

Applicable solenoid valve
VZ514-□□□□-Q
VZ514M-□□□□-Q
VZ524-□□□□-Q
VZ524M-□□□□-Q

Applicable blank plate assembly
DXT201-15-1A

Grommet (G) (H)

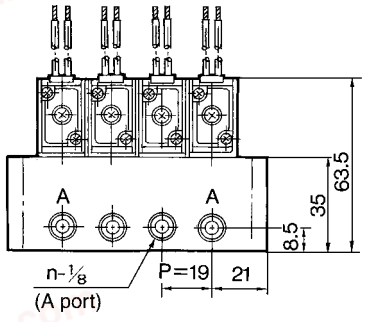

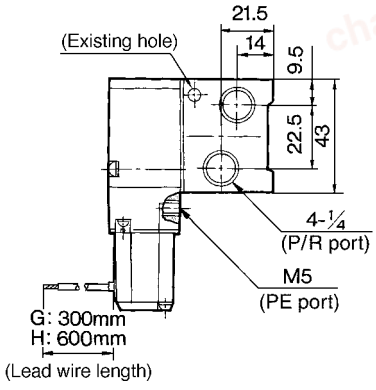

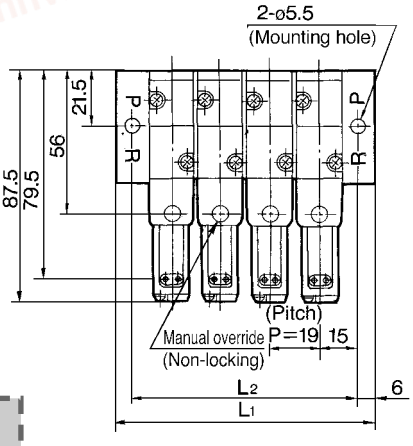

Note: This valve series is now only available with DIN connector.

Station	2	3	4	5	6	7	8	9	10	11	12	13	14	15	16	17	18	19	20
L1	61	80	99	118	137	156	175	194	213	232	251	270	289	308	327	346	365	384	403
L2	49	68	87	106	125	144	163	182	201	220	239	258	277	296	315	334	353	372	391

L plug connector (L)

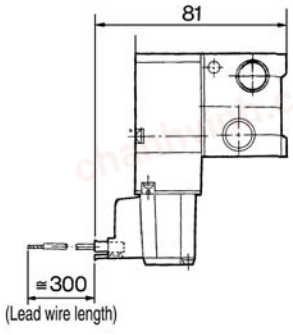

M plug connector (M)

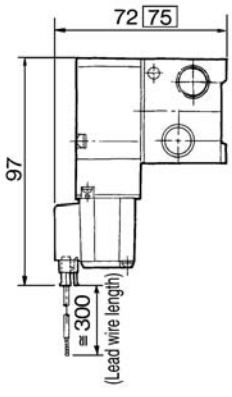

DIN terminal (D)

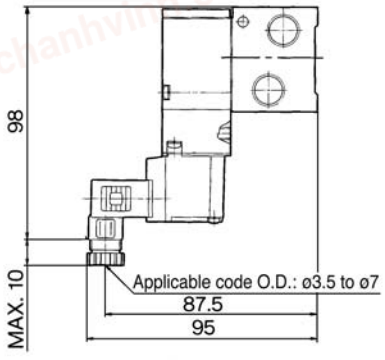

□: with indicator light and surge voltage suppressor

chanhvinh.com

VZ500

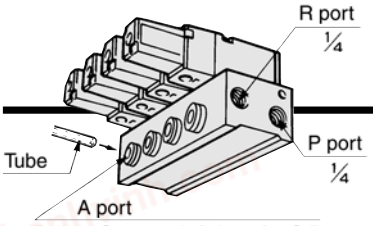

Built-in One-touch fittings for O.D. ø6mm and ø8mm

For Internal Pilot
41 Type Manifold: Side Ported

How to Order

E VV3Z5 − 41 − 05 1 − C6 □ − Q

Ordering source area code

Code	areas
–	Japan,Asia Australia,England
E	Europe
N	North America

Stations

02	2 stations
⋮	⋮
20	20 stations

A port size

C6	ø6 One-touch fitting
C8	ø8 One-touch fitting

P, R port thread

–	Rc (PT)
F	G (PF)
N	NPT
T	NPTF

Note) If more than 9 stations, supply air to P port on both sides of the manifold and exhaust from R port on both sides of the manifold.

Note) If > 9 stations, supply air to P port on both sides of the manifold and exhaust from R port on both sides of the manifold.

Applicable solenoid valve
VZ514-□□□□-Q
VZ514M-□□□□-Q
VZ524-□□□□-Q
VZ524M-□□□□-Q

Applicable blank plate assembly
DXT201-15-1A

Grommet (G), (H)

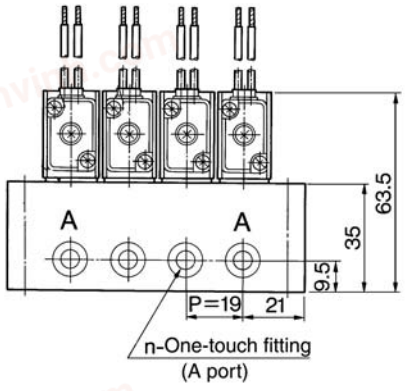

Applicable tube model
C6: T0604
C8: T0806

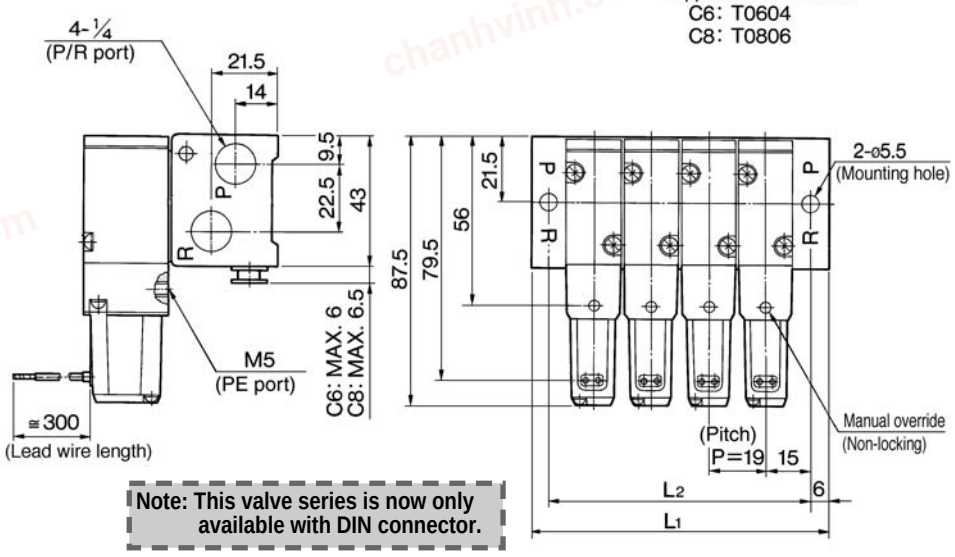

Note: This valve series is now only available with DIN connector.

Station	2	3	4	5	6	7	8	9	10	11	12	13	14	15	16	17	18	19	20
L1	61	80	99	118	137	156	175	194	213	232	251	270	289	308	327	346	365	384	403
L2	49	68	87	106	125	144	163	182	201	220	239	258	277	296	315	334	353	372	391

L plug connector (L)

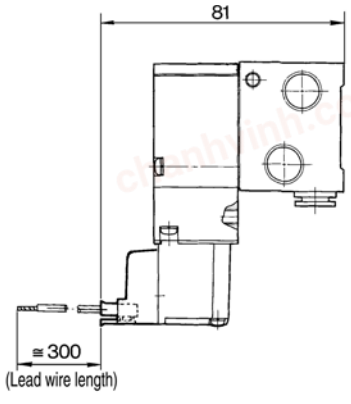

M plug connector (M)

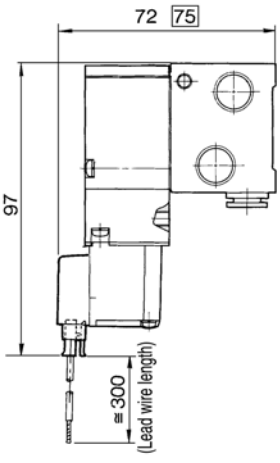

DIN terminal (D)

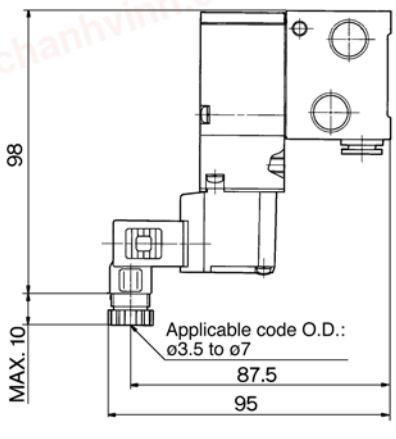

□: with indicator light and surge voltage suppressor

chanhvinh.com

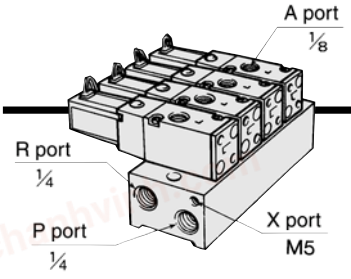

For External Pilot
21R Type Manifold: Top Ported

How to Order

E VV3Z5 – 21R – 05 1 – □ – Q

Ordering source area code

Code	areas
–	Japan,Asia Australia,England
E	Europe
N	North America

Stations

02	2 stations
⋮	⋮
20	20 stations

Note) If > 9 stations, supply and exhaust air through P port or R port on both sides of the manifold.

P, R port thread

–	Rc (PT)
00F	G (PF)
00N	NPT
00T	NPTF

Note) If more than 9 stations, supply and exhaust air through P port or R port on both sides of the manifold.

Applicable solenoid valve
VZ512R-□□□□-Q
VZ522R-□□□□-Q

Applicable blank plate assembly
DXT201-15-1A

Grommet (G), (H)

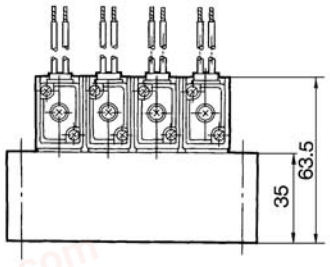

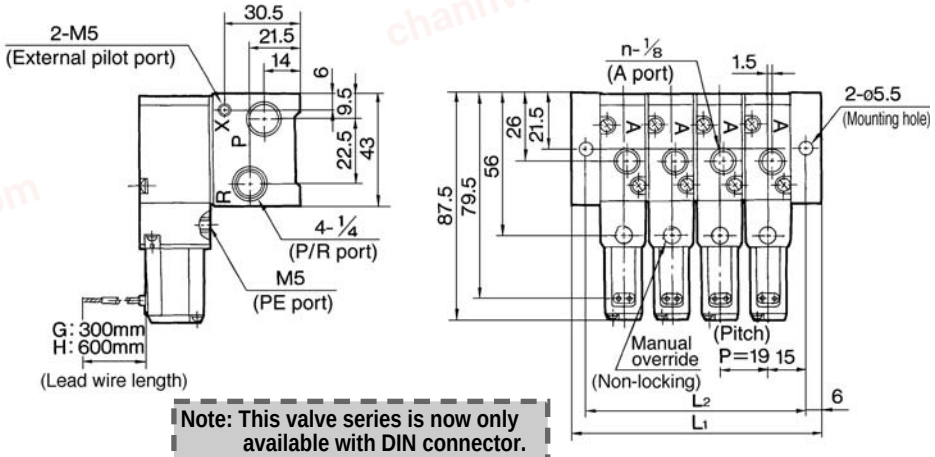

Note: This valve series is now only available with DIN connector.

Station	2	3	4	5	6	7	8	9	10	11	12	13	14	15	16	17	18	19	20
L1	61	80	99	118	137	156	175	194	213	232	251	270	289	308	327	346	365	384	403
L2	49	68	87	106	125	144	163	182	201	220	239	258	277	296	315	334	353	372	391

L plug connector (L)

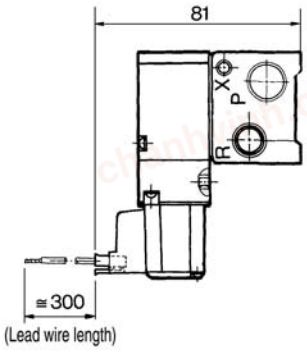

M plug connector (M)

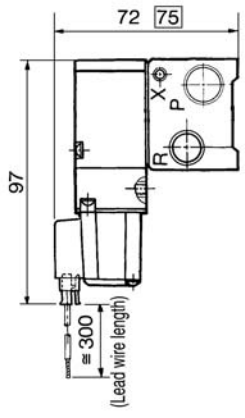

DIN terminal (D)

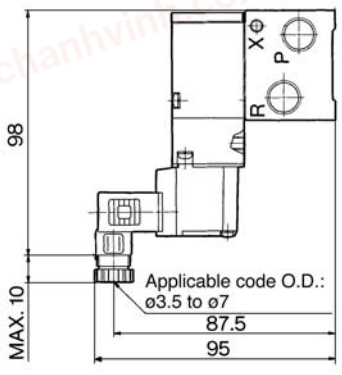

: with indicator light and surge voltage suppressor

chanhvinh.com

VZ500

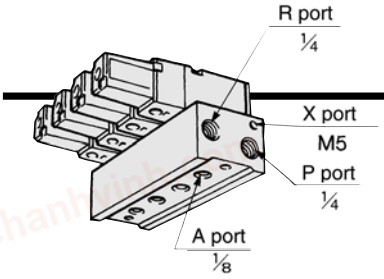

For External Pilot
41R Type Manifold: Bottom Ported

How to Order

E VV3Z5 − 41R − 05 2 − 01 □ − Q

Ordering source area code

Code	areas
–	Japan,Asia Australia,England
E	Europe
N	North America

Stations

02	2 stations
⋮	⋮
20	20 stations

A port size

01	1/8

P, R port thread

–	Rc (PT)
F	G (PF)
N	NPT
T	NPTF

Note) If more than 9 stations, supply and exhaust air through P port or R port on both sides of the manifold.

Note) If > 9 stations, supply and exhaust air through P port or R port on both sides of the manifold.

Applicable solenoid valve
VZ514R-□□□□-Q
VZ524R-□□□□-Q

Applicable blank plate assembly
DXT201-15-1A

Grommet (G), (H)

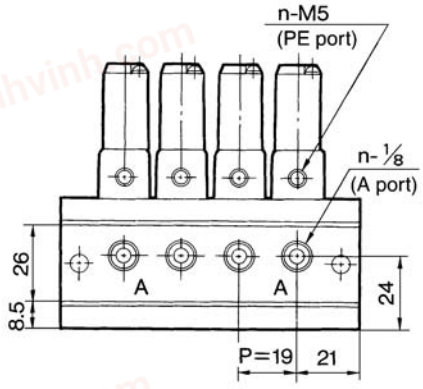

Note: This valve series is now only available with DIN connector.

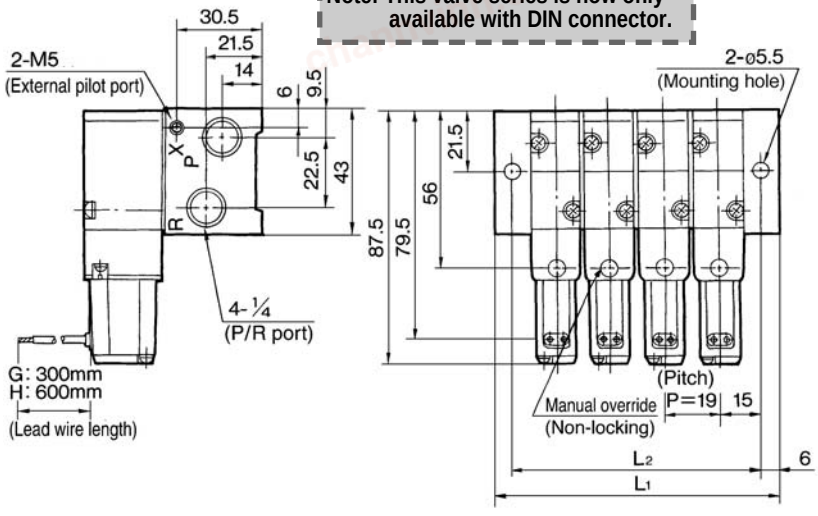

Station	2	3	4	5	6	7	8	9	10	11	12	13	14	15	16	17	18	19	20
L1	61	80	99	118	137	156	175	194	213	232	251	270	289	308	327	346	365	384	403
L2	49	68	87	106	125	144	163	182	201	220	239	258	277	296	315	334	353	372	391

L plug connector (L)

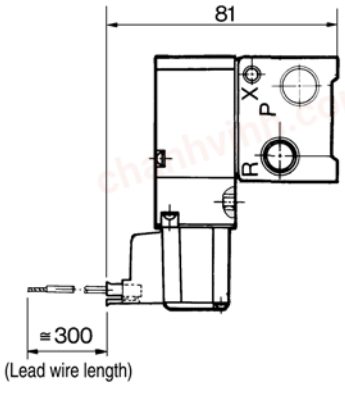

M plug connector (M)

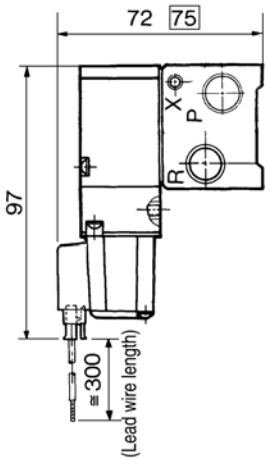

DIN terminal (D)

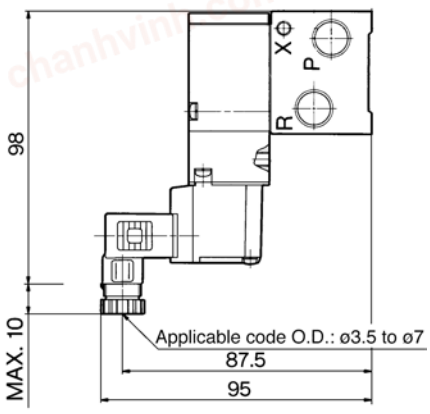

□: with indicator light and surge voltage suppressor

chanhvinh.com

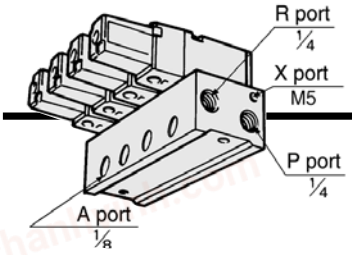

For External Pilot
41R Type Manifold: Side Ported

How to Order

E VV3Z5 − 41R − 05 1 − 01 □ − Q

Ordering source area code

Code	areas
–	Japan,Asia Australia,England
E	Europe
N	North America

Stations

02	2 stations
⋮	⋮
20	20 stations

A port size

01	1/8

P, R port thread

–	Rc (PT)
F	G (PF)
N	NPT
T	NPTF

Note) If more than 9 stations, supply air to P port on both sides of the manifold and exhaust from R port on both sides of the manifold.

Note) If > 9 stations, supply and exhaust air through P port or R port on both sides of the manifold.

Applicable solenoid valve
VZ514R-□□□□-Q
VZ524R-□□□□-Q

Applicable blank plate assembly
DXT201-15-1A

Grommet (G), (H)

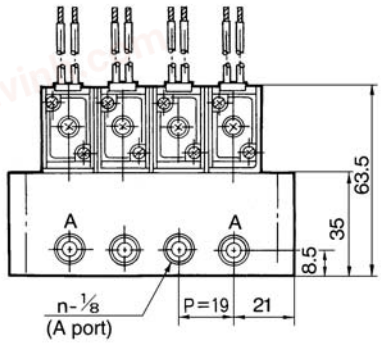

Note: This valve series is now only available with DIN connector.

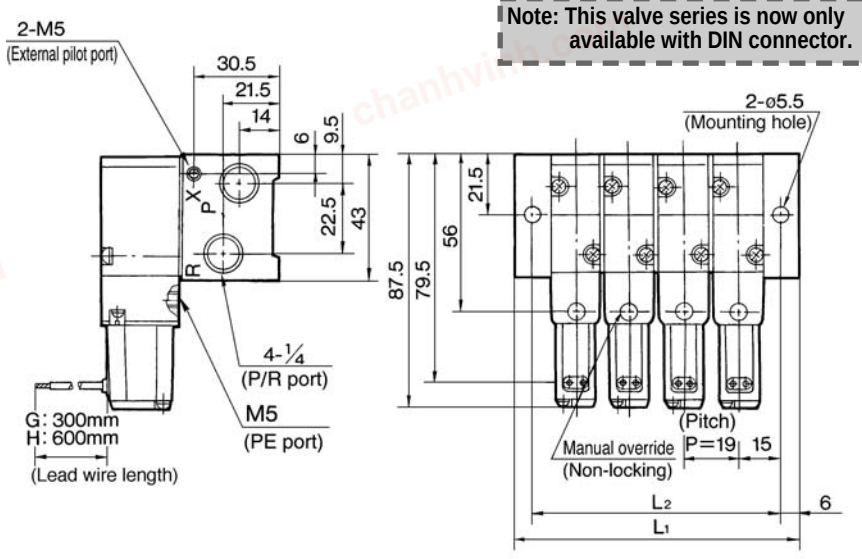

Station	2	3	4	5	6	7	8	9	10	11	12	13	14	15	16	17	18	19	20
L1	61	80	99	118	137	156	175	194	213	232	251	270	289	308	327	346	365	384	403
L2	49	68	87	106	125	144	163	182	201	220	239	258	277	296	315	334	353	372	391

L plug connector (L)

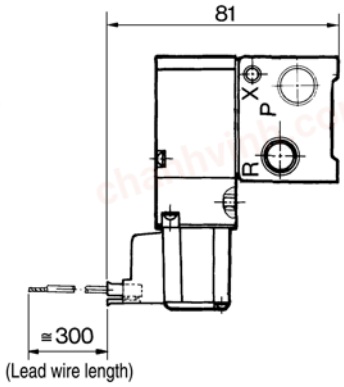

M plug connector (M)

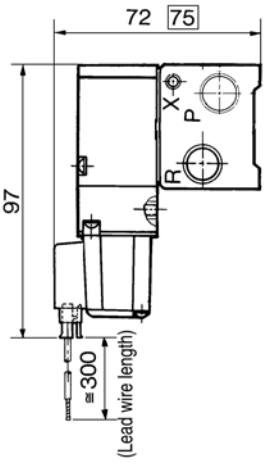

DIN terminal (D)

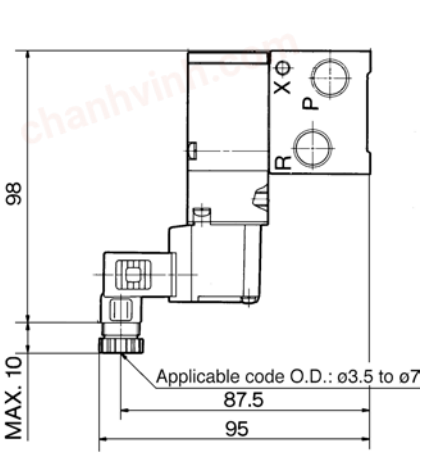

□: with indicator light and surge voltage suppressor

chanhvinh.com

VZ500

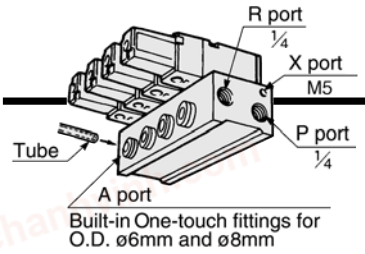

For External Pilot
41R Type Manifold: Side Ported

How to Order

E VV3Z5 – 41R – 05 1 – C6 [ ] – Q

Ordering source area code

Code	areas
–	Japan,Asia Australia,England
E	Europe
N	North America

Stations

02	2 stations
⋮	⋮
20	20 stations

A port size

C6	ø6 One-touch fitting
C8	ø8 One-touch fitting

P, R port thread

–	Rc (PT)
F	G (PF)
N	NPT
T	NPTF

Note) If more than 9 stations, supply air to P port on both sides of the manifold and exhaust from R port on both sides of the manifold.

Note) If > 9 stations, supply and exhaust air through P port or R port on both sides of the manifold.

Applicable solenoid valve
VZ514R-□□□□-Q
VZ524R-□□□□-Q

Applicable blank plate assembly
DXT201-15-1A

Grommet (G), (H)

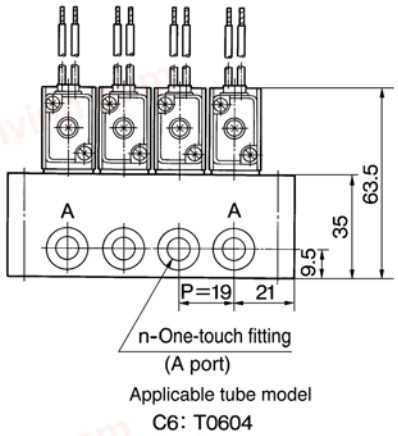

Applicable tube model
C6: T0604
C8: T0806

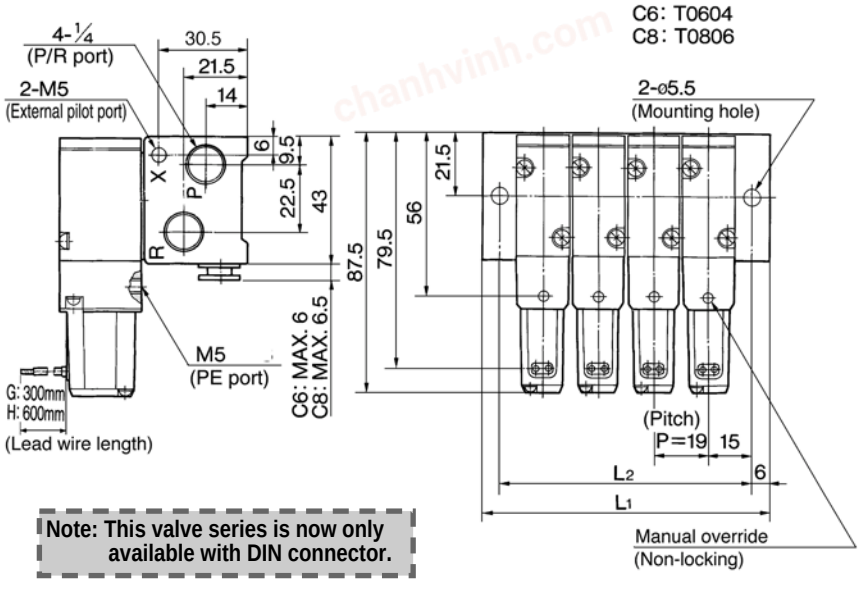

Note: This valve series is now only available with DIN connector.

Station	2	3	4	5	6	7	8	9	10	11	12	13	14	15	16	17	18	19	20
L1	61	80	99	118	137	156	175	194	213	232	251	270	289	308	327	346	365	384	403
L2	49	68	87	106	125	144	163	182	201	220	239	258	277	296	315	334	353	372	391

L plug connector (L)

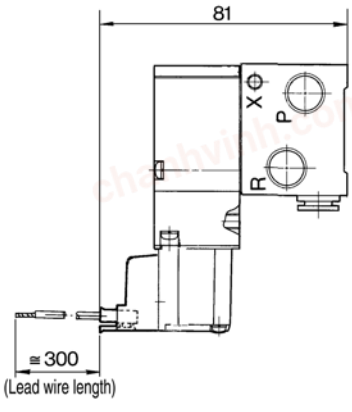

M plug connector (M)

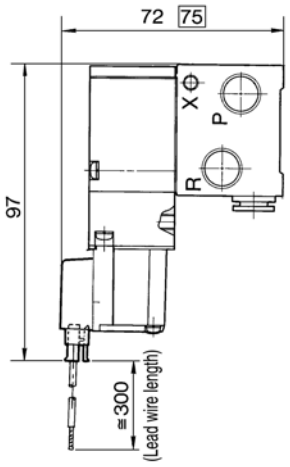

DIN terminal (D)

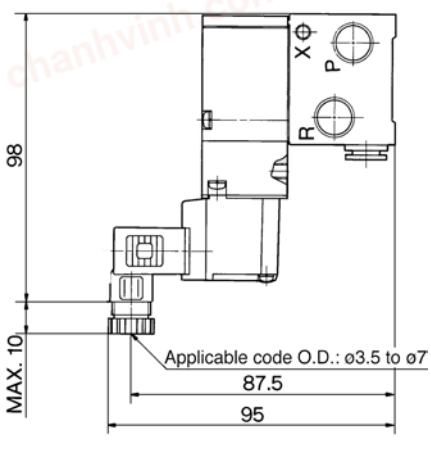

: with indicator light and surge voltage suppressor