chanhvinh.com

SMC
Expertise – Passion – Automation

Accessories
Cylinders



Accessories
C85 Series - ISO 6432

Body mounting and rod end accessories

Bore size	Frequently bought				Accessory	Frequently bought			Accessory
	1	2	3	4	5	6	7	8	
	Head flange	Clevis	Foot (1 pc)	Foot (2 pc)	Front/rear trunnion	Double knuckle joint	Rod end	Floating joint	
8	C85F10	C85C10	C85L10A	C85L10B	C85T10	GKM4-8	KJ4D	JA10-4-070	
10	C85F10	C85C10	C85L10A	C85L10B	C85T10	GKM4-8	KJ4D	JA10-4-070	
12	C85F16	C85C16	C85L16A	C85L16B	C85T16	GKM6-12	KJ6D	JA15-6-100	Joint kit (Single rod)
16	C85F16	C85C16	C85L16A	C85L16B	C85T16	GKM6-12	KJ6D	JA15-6-100	
20	C85F25	C85C25	C85L25A	C85L25B	C85T25	GKM8-16	KJ8D	JA20-8-125	C85A-20PS
25	C85F25	C85C25	C85L25A	C85L25B	C85T25	GKM10-20	KJ10D	JA30-10-125	C85A-25PS

Fittings and sensors

Bore size	Frequently bought			Accessory					
	11	12		10	13	14	15		
	Band mounting	Mounting bracket	Tube Ø	Speed controler	Speed controler with indicator	Male connector	Male elbow	Polyurethane tubing*	Nylon tubing*
8	BJ3-1	BJ2-008	4	AS1201F-M5-04A	AS1201FS-M5-04A	KQ2H04-M5A	KQ2L04-M5A	TU0425□-20	T0425□-20
10		BJ2-010	4	AS1201F-M5-04A	AS1201FS-M5-04A	KQ2H04-M5A	KQ2L04-M5A	TU0425□-20	T0425□-20
12		BJ2-012	4	AS1201F-M5-04A	AS1201FS-M5-04A	KQ2H04-M5A	KQ2L04-M5A	TU0425□-20	T0425□-20
			6	AS1201F-M5-06A	AS1201FS-M5-06A	KQ2H06-M5A	KQ2L06-M5A	TU0604□-20	T0604□-20
16		BJ2-016	4	AS1201F-M5-04A	AS1201FS-M5-04A	KQ2H04-M5A	KQ2L04-M5A	TU0425□-20	T0425□-20
			6	AS1201F-M5-06A	AS1201FS-M5-06A	KQ2H06-M5A	KQ2L06-M5A	TU0604□-20	T0604□-20
20		BM2-020	4	AS2201F-01-04SA	AS2201FS-01-04SA	KQ2H04-01AS	KQ2L04-01AS	TU0425□-20	T0425□-20
			6	AS2201F-01-06SA	AS2201FS-01-06SA	KQ2H06-01AS	KQ2L06-01AS	TU0604□-20	T0604□-20
25		BM2-025	4	AS2201F-01-04SA	AS2201FS-01-04SA	KQ2H04-01AS	KQ2L04-01AS	TU0425□-20	T0425□-20
			6	AS2201F-01-06SA	AS2201FS-01-06SA	KQ2H06-01AS	KQ2L06-01AS	TU0604□-20	T0604□-20

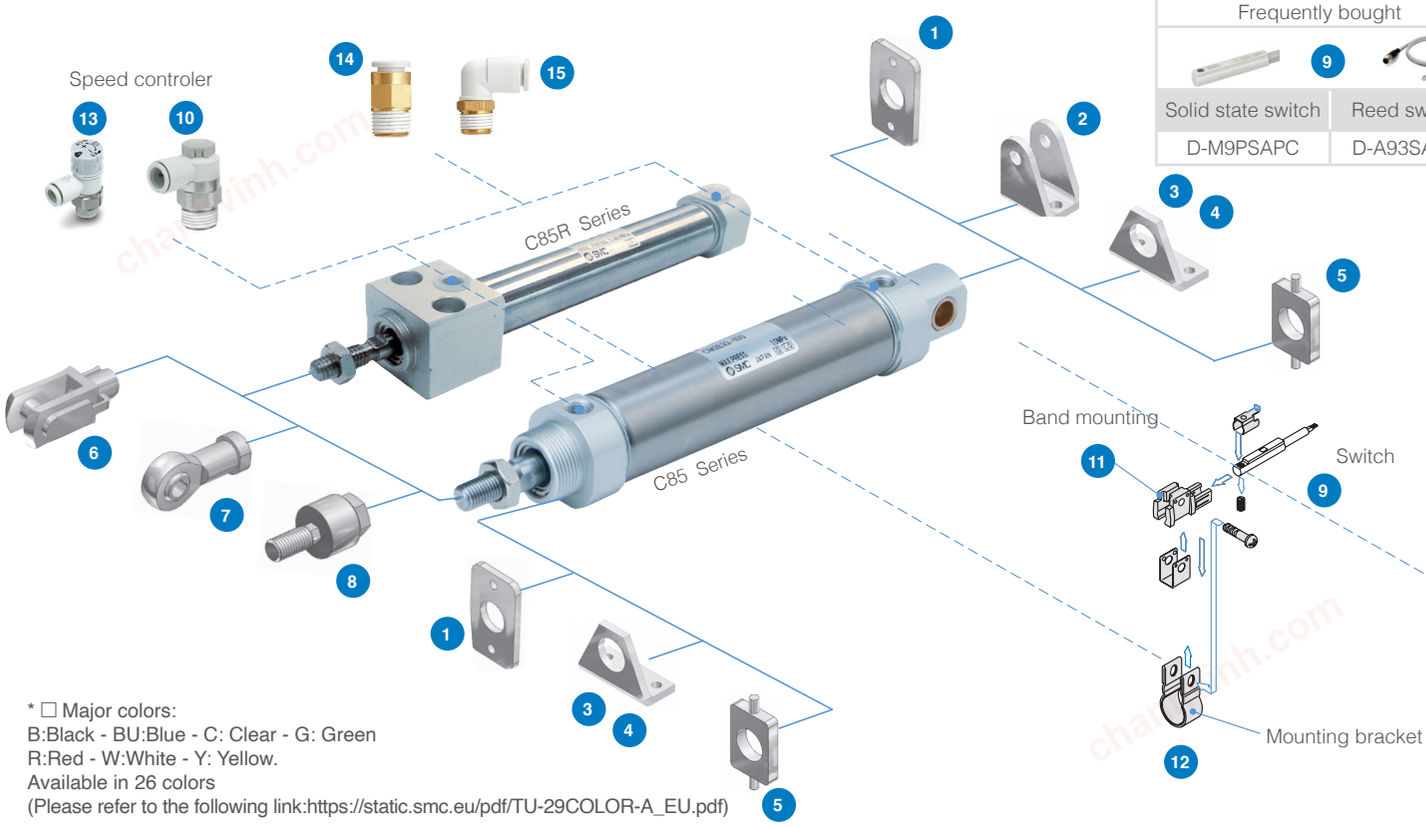

Frequently bought	
9	
Solid state switch	Reed switch
D-M9PSAPC	D-A93SAPC

* □ Major colors:
B:Black - BU:Blue - C: Clear - G: Green
R:Red - W:White - Y: Yellow.
Available in 26 colors
(Please refer to the following link:https://static.smc.eu/pdf/TU-29COLOR-A_EU.pdf)

Accessories
CP96 Series - ISO 15552



Body mounting and rod end accessories

	Frequently bought										
	1	2	3	4	5	6	7	8	9	10	11
Bore size	Axial Foot (2 pcs)	Double clevis	Single clevis	Double clevis Pivot Bracket	Single clevis with ball joint	Head flange	Clevis pivot bracket	Clevis pivot bracket with ball joint	Rod end	Rod clevis	Floating joint
32	L5032	D5032	C5032	DS5032	CS5032	F5032	E5032	ES5032	KJ10D	GKM10-20	JA30-10-125
40	L5040	D5040	C5040	DS5040	CS5040	F5040	E5040	ES5040	KJ12D	GKM12-24	JA40-12-125
50	L5050	D5050	C5050	DS5050	CS5050	F5050	E5050	ES5050	KJ16D	GKM16-32	JA50-16-150
63	L5063	D5063	C5063	DS5063	CS5063	F5063	E5063	ES5063	KJ16D	GKM16-32	JA50-16-150
80	L5080	D5080	C5080	DS5080	CS5080	F5080	E5080	ES5080	KJ20D	GKM20-40	JAH50-20-150
100	L5100	D5100	C5100	DS5100	CS5100	F5100	E5100	ES5100	KJ20D	GKM20-40	JAH50-20-150
125	L5125	D5125	C5125	DS5125	CS5125	F5125	E5125	ES5125	KJ27D	GKM30-54	JA125-27-200

Fittings and sensors

Bore size	Frequently bought		Accessory					
	15		12	13	18	19		
	Solid state switch	Reed switch	Speed controler	Speed controler with indicator	Male connector	Male elbow	Polyurethane tubing*	Nylon tubing*
32	D-M9PSAPC	D-A93SAPC	AS2201F-01-06SA	AS2201FS-01-06SA	KQ2H06-01AS	KQ2L06-01AS	TU0604☐-20	T0604☐-20
			AS2201F-01-0_SA	AS2201FS-01-08SA	KQ2H08-01AS	KQ2L08-01AS	TU0805☐-20	T0806☐-20
40			AS2201F-02-06SA	AS2201FS-02-06SA	KQ2H06-02AS	KQ2L06-02AS	TU0604☐-20	T0604☐-20
			AS2201F-02-08SA	AS2201FS-02-08SA	KQ2H08-02AS	KQ2L08-02AS	TU0805☐-20	T0806☐-20
50			AS2201F-02-06SA	AS2201FS-02-06SA	KQ2H06-02AS	KQ2L06-02AS	TU0604☐-20	T0604☐-20
			AS2201F-02-08SA	AS2201FS-02-08SA	KQ2H08-02AS	KQ2L08-02AS	TU0805☐-20	T0806☐-20
63			AS3201F-03-08SA	AS3201FS-03-08SA	KQ2H08-03AS	KQ2L08-03AS	TU0805☐-20	T0806☐-20
			AS3201F-03-10SA	AS3201FS-03-10SA	KQ2H10-03AS	KQ2L10-03AS	TU1065☐-20	T1075☐-20
80			AS3201F-03-08SA	AS3201FS-03-08SA	KQ2H08-03AS	KQ2L08-03AS	TU0805☐-20	T0806☐-20
			AS3201F-03-10SA	AS3201FS-03-10SA	KQ2H10-03AS	KQ2L10-03AS	TU1065☐-20	T1075☐-20
100			AS4201F-04-10SA	AS4201FS-04-10SA	KQ2H10-04AS	KQ2L10-04AS	TU1065☐-20	T1075☐-20
			AS4201F-04-12SA	AS4201FS-04-12SA	KQ2H12-04AS	KQ2L12-04AS	TU1208☐-20	T1209☐-20
125			AS4201F-04-10SA	AS4201FS-04-10SA	KQ2H10-04AS	KQ2L10-04AS	TU1065V-20	T1075☐-20
			AS4201F-04-12SA	AS4201FS-04-12SA	KQ2H12-04AS	KQ2L12-04AS	TU1208☐-20	T1209☐-20

Bore size	Accessory
	Joint kit (Single rod)
32	CS95-32
40	CS95-40
50	CS95-50
63	CS95-63
80	CS95-80
100	CS96-100
125	CS96-125

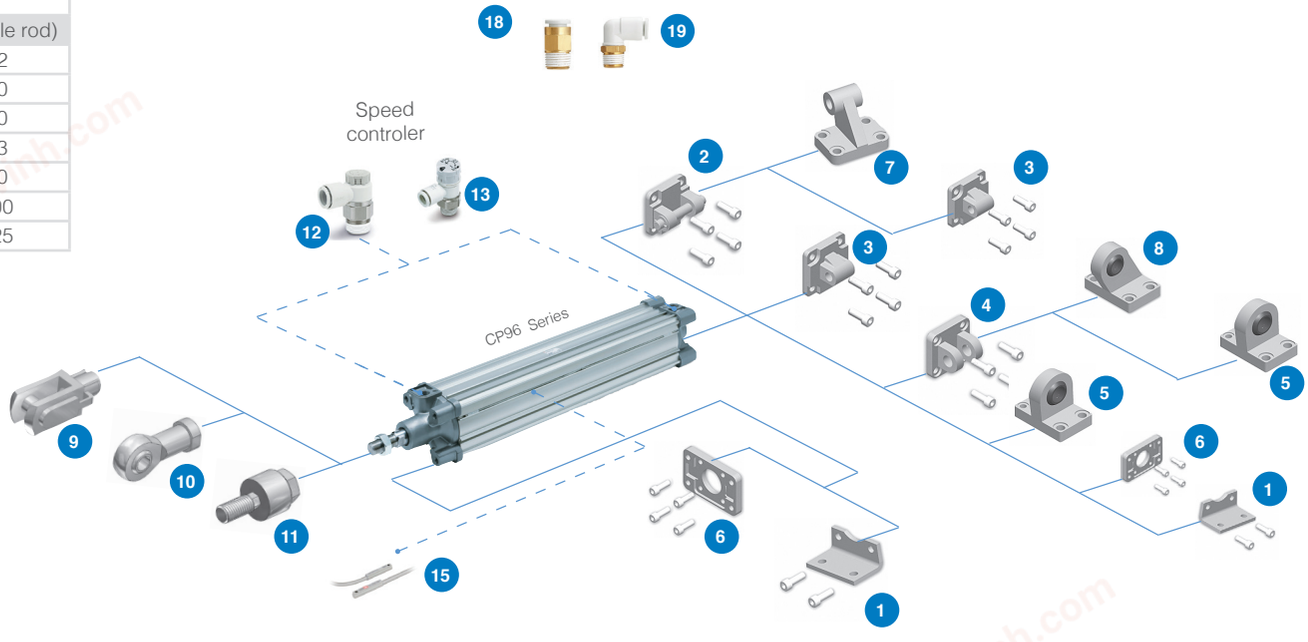

SMC

* ☐ Major colors:
B:Black - BU:Blue - C: Clear - G: Green - R:Red - W:White - Y: Yellow.
Available in 26 colors (Please refer to the following link:https://static.smc.eu/pdf/TU-29COLOR-A_EU.pdf)

Accessories
C55 Series - ISO 21287

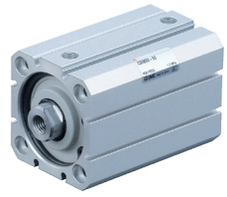

Body mounting and rod end accessories

Bore size	Frequently bought							Accessory
	1	2	3	4	5	6	7	
	Axial Foot(2 pcs)	Head flange	Single clevis	Rod end	Rod clevis	Floating joint	Floating joint for female rod end	Joint kit (Single rod)
20	C55-L020	C55-F020	C55-C020	KJ8D	GKM8-16	JA20-8-125	JB25-6-100	CQ2B20-PS
25	C55-L025	C55-F025	C55-C025	KJ8D	GKM8-16	JA20-8-125	JB25-6-100	CQ2B25-PS
32	C55-L032	C55-F032	C55-C032	KJ10D	GKM10-20	JA30-10-125	JB40-8-125	CQ2B32-PS
40	C55-L040	C55-F040	C55-C040	KJ12D	GKM10-20	JA30-10-125	JB40-8-125	CQ2B40-PS
50	C55-L050	C55-F050	C55-C050	KJ16D	GKM12-24	JA40-12-125	JB63-10-150	CQ2B50-PS
63	C55-L063	C55-F063	C55-C063	KJ16D	GKM12-24	JA40-12-125	JB63-10-150	CQ2B63-PS
80	C55-L080	C55-F080	C55-C080	KJ20D	GKM16-32	JA50-16-150		CQ2B80-PS
100	C55-L100	C55-F100	C55-C100	KJ20D	GKM16-32	JA50-16-150		CQ2B100-PS

Fittings and sensors

Bore size	Frequently bought			Accessory					
	12			16	13	14	15		
	Solid state switch	Reed switch	Tube Ø	Speed controler	Speed controler with indicator	Male connector	Male elbow	Polyurethane tubing*	Nylon tubing*
20	D-M9PSAPC	D-A93SAPC	4	AS1201F-M5-04A	AS1201FS-M5-04A	KQ2H04-M5A	KQ2L04-M5A	TU0425□-20	T0425□-20
			6	AS1201F-M5-06A	AS1201FS-M5-06A	KQ2H06-M5A	KQ2L06-M5A	TU0604□-20	T0604□-20
25			4	AS1201F-M5-04A	AS1201FS-M5-04A	KQ2H04-M5A	KQ2L04-M5A	TU0425□-20	T0425□-20
			6	AS1201F-M5-06A	AS1201FS-M5-06A	KQ2H06-M5A	KQ2L06-M5A	TU0604□-20	T0604□-20
32			4	AS2201F-01-04SA	AS2201FS-01-04SA	KQ2H04-01AS	KQ2L04-01AS	TU0425□-20	T0425□-20
			6	AS2201F-01-06SA	AS2201FS-01-06SA	KQ2H06-01AS	KQ2L06-01AS	TU0604□-20	T0604□-20
40			4	AS2201F-01-04SA	AS2201FS-01-04SA	KQ2H04-01AS	KQ2L04-01AS	TU0425□-20	T0425□-20
			6	AS2201F-01-06SA	AS2201FS-01-06SA	KQ2H06-01AS	KQ2L06-01AS	TU0604□-20	T0604□-20
50			6	AS2201F-01-06SA	AS2201FS-01-06SA	KQ2H06-01AS	KQ2L06-01AS	TU0604□-20	T0604□-20
			8	AS2201F-01-08SA	AS2201FS-01-08SA	KQ2H08-01AS	KQ2L08-01AS	TU0805□-20	T0806□-20
63			6	AS2201F-01-06SA	AS2201FS-01-06SA	KQ2H06-01AS	KQ2L06-01AS	TU0604□-20	T0604□-20
			8	AS2201F-01-08SA	AS2201FS-01-08SA	KQ2H08-01AS	KQ2L08-01AS	TU0805□-20	T0806□-20
80			8	AS2201F-01-08SA	AS2201FS-01-08SA	KQ2H08-01AS	KQ2L08-01AS	TU0805□-20	T0806□-20
			10	AS2201F-01-10SA	AS2201FS-01-10SA	KQ2H10-01AS	KQ2L10-01AS	TU1065□-20	T1075□-20
100			8	AS2201F-01-08SA	AS2201FS-01-08SA	KQ2H08-01AS	KQ2L08-01AS	TU0805□-20	T0806□-20
			10	AS2201F-01-10SA	AS2201FS-01-10SA	KQ2H10-01AS	KQ2L10-01AS	TU1065□-20	T1075□-20

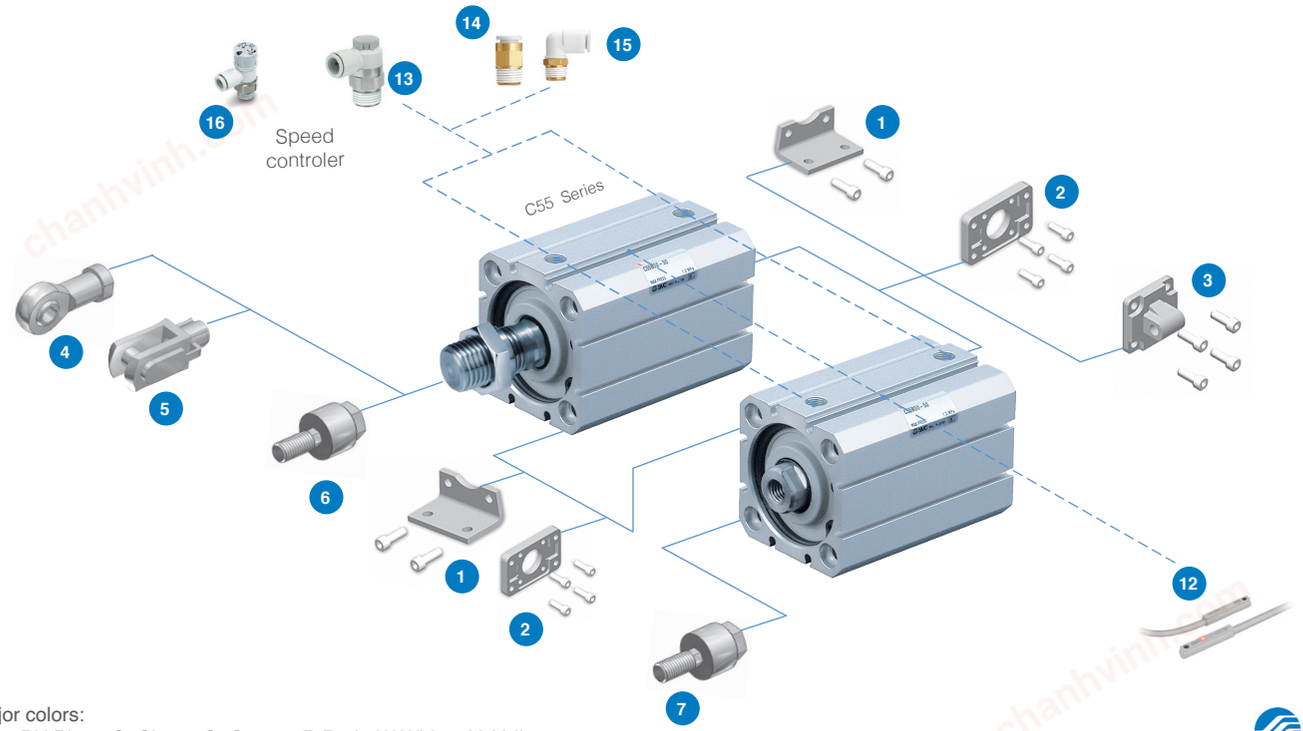

* □ Major colors:
B:Black - BU:Blue - C: Clear - G: Green - R:Red - W:White - Y: Yellow.
Available in 26 colors (Please refer to the following link:https://static.smc.eu/pdf/TU-29COLOR-A_EU.pdf)

Accessories
MGP Series



Bore size		Accessory					
		11	13	14	15		
	Tube Ø	Speed controler	Speed controler with indicator	Male connector	Male elbow	Polyurethane tubing*	Nylon tubing*
12	4	AS1201F-M5-04A	AS1201FS-M5-04A	KQ2H04-M5A	KQ2L04-M5A	TU0425□-20	T0425□-20
16	4	AS1201F-M5-04A	AS1201FS-M5-04A	KQ2H04-M5A	KQ2L04-M5A	TU0425□-20	T0425□-20
20	4	AS2201F-01-04SA	AS2201FS-01-04SA	KQ2H04-01AS	KQ2L04-01AS	TU0425□-20	T0425□-20
	6	AS2201F-01-06SA	AS2201FS-01-06SA	KQ2H06-01AS	KQ2L06-01AS	TU0604□-20	T0604□-20
25	4	AS1201F-M5-04A	AS1201FS-M5-04A	KQ2H04-M5AS	KQ2L04-M5AS	TU0425□-20	T0425□-20
	6	AS1201F-M5-06A	AS1201FS-M5-06A	KQ2H06-M5AS	KQ2L06-M5AS	TU0604□-20	T0604□-20
32	4	AS2201F-01-04SA	AS2201FS-01-04SA	KQ2H04-01AS	KQ2L04-01AS	TU0425□-20	T0425□-20
	6	AS2201F-01-06SA	AS2201FS-01-06SA	KQ2H06-01AS	KQ2L06-01AS	TU0604□-20	T0604□-20
40	6	AS2201F-01-06SA	AS2201FS-01-06SA	KQ2H06-01AS	KQ2L06-01AS	TU0604□-20	T0604□-20
	8	AS2201F-01-08SA	AS2201FS-01-08SA	KQ2H08-01AS	KQ2L08-01AS	TU0805□-20	T0806□-20
50	6	AS2201F-02-06SA	AS2201FS-02-06SA	KQ2H06-02AS	KQ2L06-02AS	TU0604□-20	T0604□-20
	8	AS2201F-02-08SA	AS2201FS-02-08SA	KQ2H08-02AS	KQ2L08-02AS	TU0805□-20	T0806□-20
63	6	AS2201F-02-06SA	AS2201FS-02-06SA	KQ2H06-02AS	KQ2L06-02AS	TU0604□-20	T0604□-20
	8	AS2201F-02-08SA	AS2201FS-02-08SA	KQ2H08-02AS	KQ2L08-02AS	TU0805□-20	T0806□-20
80	8	AS2201F-03-08SA	AS2201FS-03-08SA	KQ2H08-03AS	KQ2L08-03AS	TU0805□-20	T0806□-20
	10	AS2201F-03-10SA	AS2201FS-03-10SA	KQ2H10-03AS	KQ2L10-03AS	TU1065□-20	T1075□-20
100	8	AS2201F-03-08SA	AS2201FS-03-08SA	KQ2H08-03AS	KQ2L08-03AS	TU0805□-20	T0806□-20
	10	AS2201F-03-10SA	AS2201FS-03-10SA	KQ2H10-03AS	KQ2L10-03AS	TU1065□-20	T1075□-20

Bore size	Accessory	Frequently bought	
		12	
	Joint kit	Solid state switch	Reed switch
12	MGP12-Z-PS		
16	MGP16-Z-PS		
20	MGP20-Z-PS	D-M9PSAPC	D-A93SAPC
25	MGP25-Z-PS		
32	MGP32-Z-PS		
40	MGP40-Z-PS		
50	MGP50-Z-PS		
63	MGP63-Z-PS		
80	MGP80-Z-PS		
100	MGP100-Z-PS		

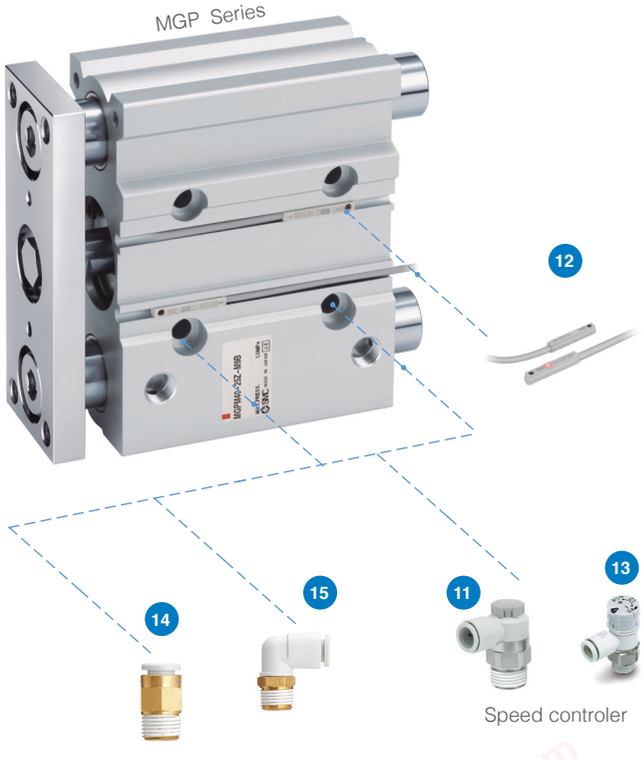

* □ Major colors:
B:Black - BU:Blue - C: Clear - G: Green - R:Red - W:White - Y: Yellow.
Available in 26 colors (Please refer to the following link:https://static.smc.eu/pdf/TU-29COLOR-A_EU.pdf)