chanhvinh.com

Speed Controller with One-touch Fitting

RoHS New

Reduces labour time!

Elbow | Universal | Brass (Electroless nickel plated) | Stainless steel

Easy to use

Push-lock type

- Easy to lock

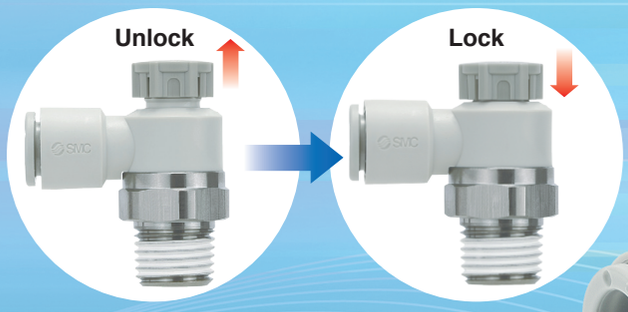

Larger knob



Body size	Ø D [mm]
1	9.4
2	12 (Port size 1/8)
	13 (Port size 1/4)
3	16.6
4	18.8

Improved tube insertion/removal

Max. Insertion force: 30 % (8 N) reduction



Max. Removal force: 20 % (5 N) reduction*

* Tube pulling out strength is ensured to be equivalent to current model.

More space beneath the tube. Easier installation/removal of the tube.

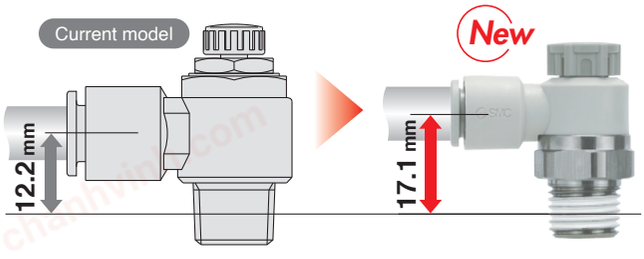

AS22□1F-02-□ AS22□1F-02-□SA

	Elbow	Universal	Brass (Electroless nickel plated)	Stainless steel
Sealant/Gasket seal M/UNF/R/NPT	P.5	P.5	P.5	P.14
Face seal R/NPT/G (New)	P.29	P.29 * Only G thread	P.29	P.14 * Only G thread
Gasket seal Uni	P.37	P.37	P.37	







Series AS

SMC

CAT.EUS20-220Dd-UK

chanhvinh.com

Easy tool-less one push-lock

Current model

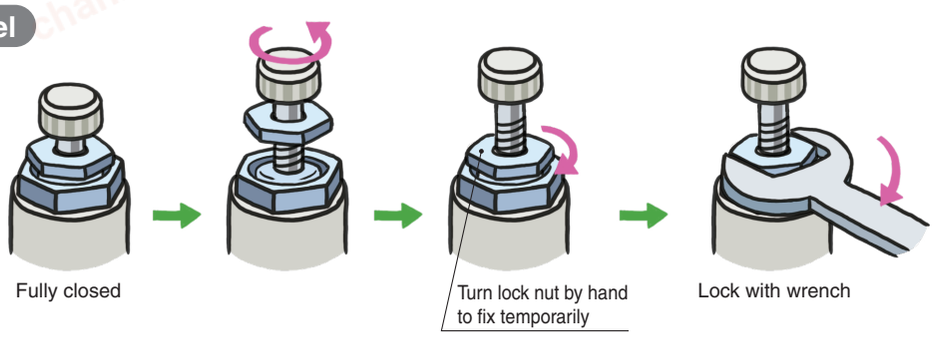

Push-lock type

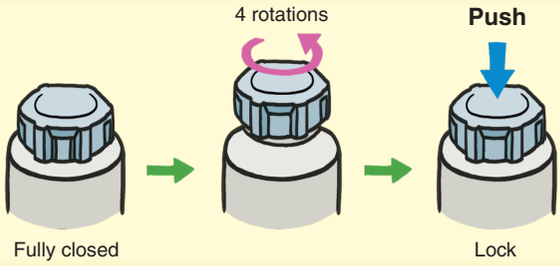

Easy to turn large knob

Current model

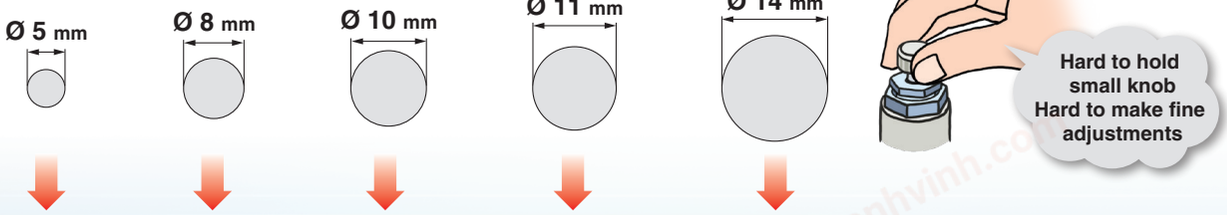

Push-lock type

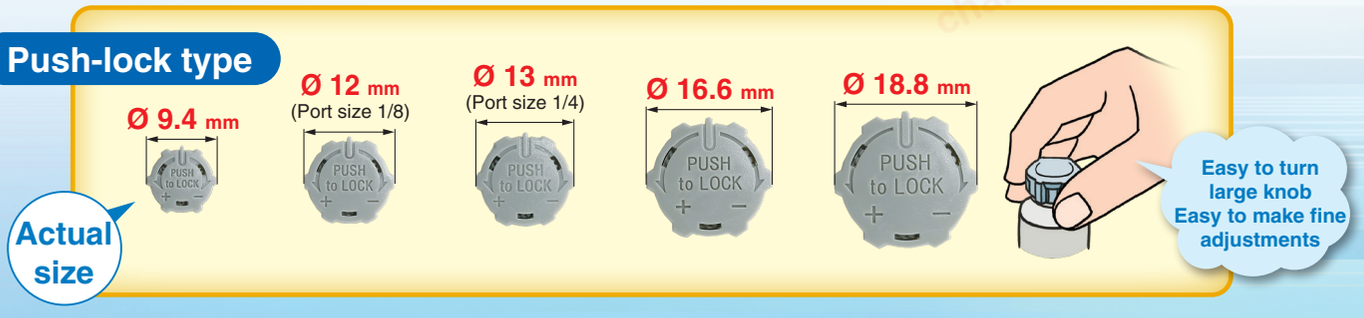

Flow rate reproducibility



Improved reproducibility of flow rate

Stable knob position when fully closed (no flow rate) onto the contact face stopper (rotating stopper). Small variations in flow rate depending on the number of knob rotations

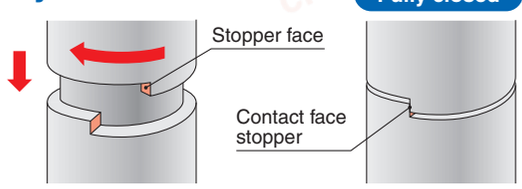

chanhvinh.com

Lightweight

Weight
Up to approx.
50 % lighter

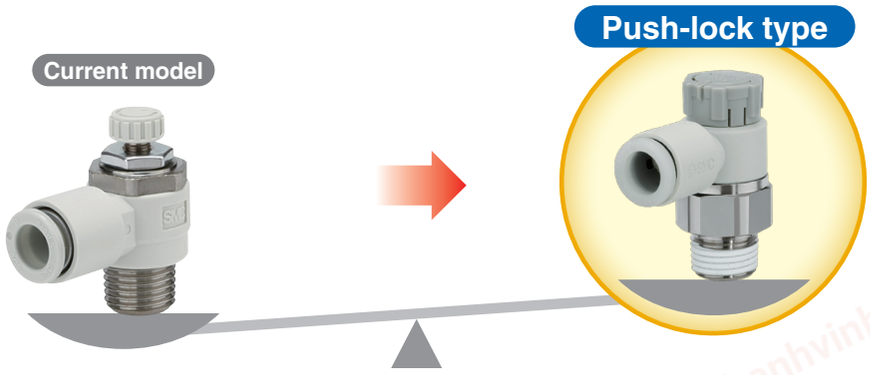

Tubing O.D.	Thread	Part no.	Weight
Ø 6	1/4	AS22□1F-02-06	32 g
Ø 12	1/2	AS42□1F-04-12	101 g

Tubing O.D.	Thread	Part no.	Weight
Ø 6	1/4	AS22□1F-02-06A	18 g
Ø 12	1/2	AS42□1F-04-12A	56 g

New Face seal adopted for threading



Improved installability (Reduced tool-tightening after hand-tightening)

■ **Face seal**

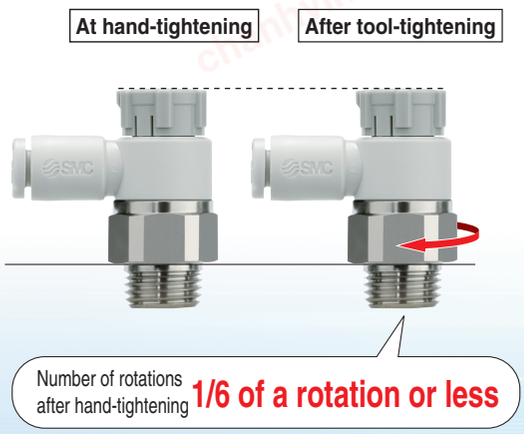

■ **Sealant**

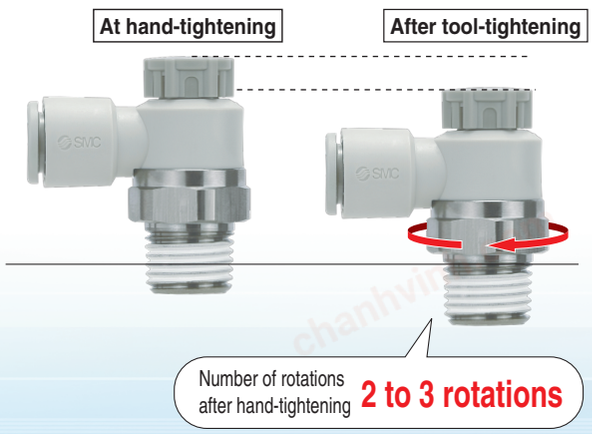

Prevention of sealant residue/protrusion

Current sealant type leaves residue and protrudes out from the threading when installing, making it necessary to clear away the residue using an air blower or similar. However, no residue is created when using a face seal.

Re-piping is possible.

Face seal
Repeated re-piping some 6 to 10 times is possible due to use of elastic sealant on seating.

Sealant
Sealant tape is necessary because sealant becomes separated with repeated installation.

Uniform height

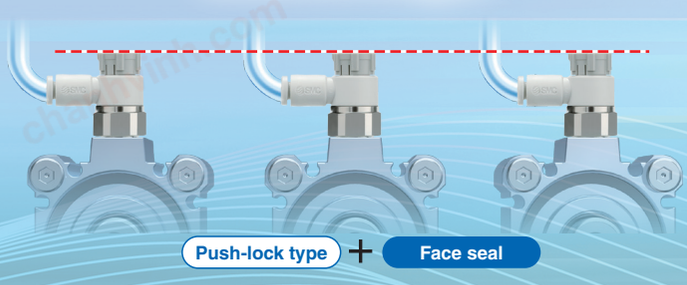

Uneven heights due to thread and needle variations

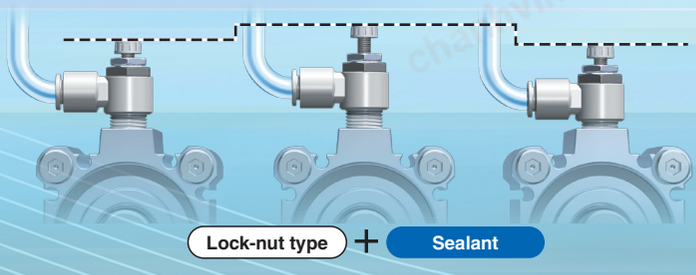

chanhvinh.com

Series Variations

◎Electroless nickel plating type is standardized. ◎Stainless steel type is standardized. ◎G thread (Face seal) is standardized.

	Seal method	Body size	Port size		Applicable tubing O.D. Metric size 2	3.2	4	6	8	10	12	16	Inch size 1/8"	5/32"	1/4"	5/16"	3/8"	1/2"	Metal parts material	Applicable tubing material	Page
	Gasket seal	1	M3 x 0.5 *2																·Brass & thread mat: Stainless steel	Nylon (Series T, TIA) Soft nylon (Series TS, TISA) Polyurethane (Series T, TIUB) Fluororesin (Series TLM, TILM) (Series TH, TIH)	P.26
	Gasket seal	1	M5 x 0.8			*2													·Brass/ Steel wire ·Stainless steel		P.5 (Brass/ Steel wire) P.14 (Stainless steel)
			10-32UNF			*2															
	Sealant *1	2	R NPT	1/8						*2											
				1/4			*2								*2						
		3		1/4																	
				3/8																	
		4		1/2								*2									
	Face seal	2	G	1/8						*2											P.29
				1/4			*2														
		3		1/4																	
				3/8																	
		4		1/2								*2									
		2	R NPT	1/8																	
				1/4																	
		3		3/8																	
		4		1/2																	
	Gasket seal	2	Uni	1/8						*2									·Brass/ Steel wire		P.37
				1/4			*2								*2						
		3		1/4																	
				3/8																	
		4		1/2								*2									

*1 "Without sealant" type can be selected as a standard option. *2 Universal type is not available.

Restrictor (Made to Order ➡ P.13, 36)

• Flow control of the air blow and air purge

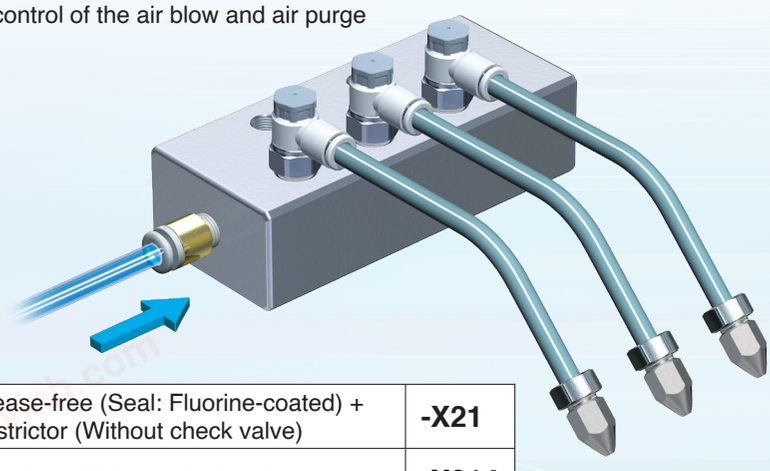

Grease-free (Seal: Fluorine-coated) + Restrictor (Without check valve)	-X21
Restrictor (Without check valve)	-X214

chanhvinh.com

Easy identification of product type

Series	Konb colour		Release button colour	
	Meter-out	Meter-in	Metric	Inch
Brass 	Grey 	Light blue 	Light gray 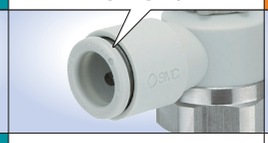	Orange 
Stainless steel 	Grey 	Light blue 	White 	White 

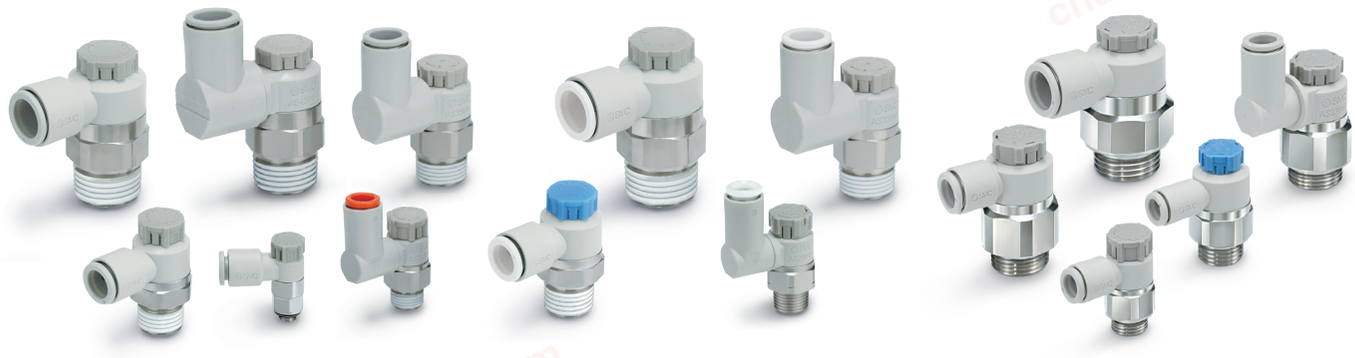

chanhvinh.com

chanhvinh.com

chanhvinh.com

chanhvinh.com

chanhvinh.com

chanhvinh.com

Push-lock Series Variations



Refer to the **WEB catalogue on www.smc.eu** for details.



Speed Controller with Indicator/*Series* AS-FS

Numerical indication of knob rotation for flow rate reduces flow setting time and setting errors!

Indicator window



Numerical indication of knob rotation

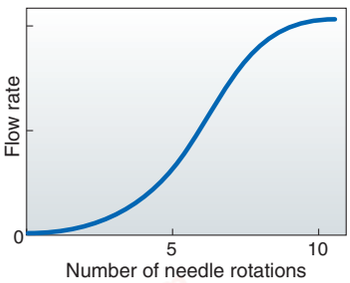

Body size 1

Indicator window	Number of needle rotations
1	1
2	2
⋮	⋮
8	8

Body size 2 or larger

Indicator window	Number of needle rotations
1	1
2	2
⋮	⋮
10	10

Two indicator window directions available



Indicator direction: 0° **Indicator direction: 180°**

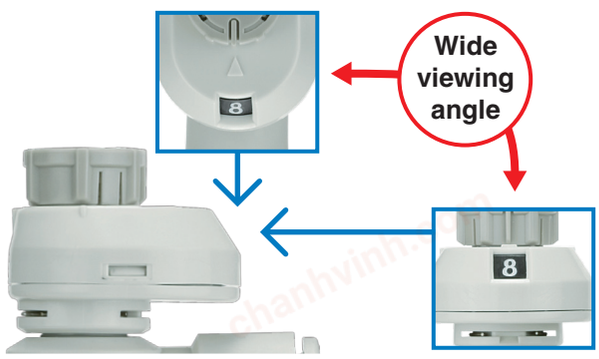

Body size	Port size	Applicable tubing O.D.	
		Metric size	Inch size
1 to 4	M5 to 1/2	Ø 2 to Ø 16	Ø 1/8" to Ø 1/2"



chanhvinh.com

Speed Controller with One-touch Fitting
Elbow Type/Universal Type
Series AS

RoHS



Model

Model		Port size		Seal method	Applicable tubing O.D.													
					Metric size								Inch size					
Elbow type	Universal type				2 Note 2)	3.2	4	6	8	10	12	16	1/8"	5/32"	1/4"	5/16"	3/8"	1/2"
AS12□1F-M5□	AS13□1F-M5□	M5 x 0.8		Gasket seal	● Note 3)	●	●	●					●	●	●			
AS12□1F-U10/32□	AS13□1F-U10/32□	10-32UNF			● Note 3)	●	●	●					●	●	●			
AS22□1F-□01	AS23□1F-□01	R NPT	1/8	Sealant Note 1)		●	●	●	●	● Note 3)			●	●	●	●		
AS22□1F-□02	AS23□1F-□02		1/4			● Note 3)	●	●	●	●			● Note 3)	●	●	●	●	
AS32□1F-□02	AS33□1F-□02		1/4					●	●	●	●				●	●	●	
AS32□1F-□03	AS33□1F-□03		3/8					●	●	●	●				●	●	●	
AS42□1F-□04	AS43□1F-□04		1/2							●	●	● Note 3)					●	●

Note 1) "Without sealant" type can be selected as a standard option.
Note 2) Only polyurethane tubing is applicable for Ø 2.
Note 3) Universal type is not available.

Flow Direction Symbols on Body

	Meter-out	Meter-in
Symbol		

Specifications

Fluid	Air
Proof pressure	1.5 MPa
Max. operating pressure	1 MPa
Min. operating pressure	0.1 MPa
Ambient and fluid temperature	–5 to 60 °C (No freezing)
Applicable tubing material	Nylon, Soft nylon, Polyurethane Note), FEP, PFA

Note) Use caution at the max. operating pressure when using soft nylon or polyurethane tubing. (Refer to the WEB catalogue for details.)

⚠ Caution

Be sure to read this before handling. Refer to the back cover for Safety Instructions. For Flow Control Equipment Precautions, refer to "Handling Precautions for SMC Products" and the Operation Manual.

Flow Rate and Sonic Conductance

Model		AS12□1F-M5□ AS13□1F-M5□		AS22□1F-□01 Note 3) AS23□1F-□01 Note 3)			AS22□1F-□02 AS23□1F-□02				AS32□1F AS33□1F			AS42□1F AS43□1F	
Tubing O.D.	Metric size	Ø 2	Ø 3.2 Ø 4 Ø 6	Ø 3.2	Ø 4	Ø 6 Ø 8 Ø 10	Ø 3.2	Ø 4	Ø 6	Ø 8 Ø 10	Ø 6	Ø 8	Ø 10 Ø 12	Ø 10	Ø 12 Ø 16
	Inch size	—	Ø 1/8" Ø 1/4" Ø 5/32"	Ø 1/8"	Ø 5/32"	Ø 1/4" Ø 5/16"	Ø 1/8"	Ø 5/32"	–	Ø 1/4" Ø 5/16" Ø 3/8"	Ø 1/4"	Ø 5/16"	Ø 3/8"	Ø 3/8"	Ø 1/2"
C values: Sonic conductance dm³/(s·bar)	Free flow	0.2	0.3	0.4	0.6	0.6	0.7	1.0	1.3	1.5	1.6	1.7	2.5	4.4	4.8
	Controlled flow	0.2	0.3	0.4	0.7	0.8	0.6	0.9	1.3		2.1	2.4	3.3	4.4	4.9
b values: Critical pressure ratio	Free flow	0.3	0.4	0.2		0.3	0.3		0.4		0.4		0.3	0.3	
	Controlled flow	0.2		0.2		0.3	0.3				0.3			0.3	

Note 1) 10-32UNF has the same specification as M5.
Note 2) C and b values are for controlled flow with the needle fully open and free flow with the needle fully closed.
Note 3) The same specifications also apply to the AS-FG series (stainless steel type).

chanhvinh.com

Elbow | Universal | Brass — Electroless nickel plated

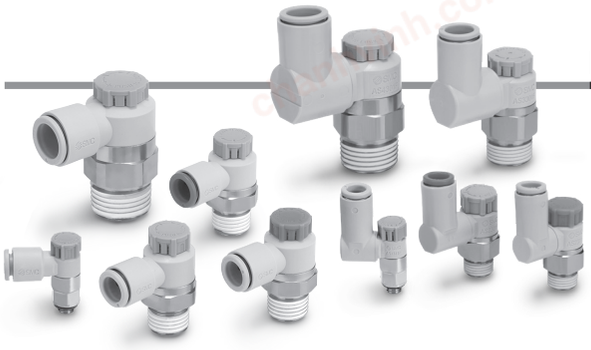

How to Order

Applicable tubing O.D. Note 1)

Metric size		Inch size	
02	Ø 2	01	Ø 1/8"
23	Ø 3.2 Note 2)	03	Ø 5/32"
04	Ø 4	07	Ø 1/4"
06	Ø 6		

Note 1) For selecting applicable tubing O.D., refer to the "Model" on page 5. Metric size and inch size types can be visually identified by colour of the release button.
Metric size: Light grey
Inch size: Orange
Note 2) Use Ø 1/8" tube.

Width across flats (H)

E	8 mm
—	9 mm

Body size

1	M5 x 0.8 10-32UNF

Port size

M5	M5 x 0.8
U10/32	10-32UNF

Body size 1

AS **1** **2** **0** **1** **F** – **M5** **E** – **06** **A** – [ ]

Body size 2/3/4

AS **2** **2** **0** **1** **F** – [ ] **01** – **06** **S** **A** – [ ]

Body size

2	1/8, 1/4
3	3/8
4	1/2

Type

2	Elbow
3	Universal

Control type Note)

0	Meter-out
1	Meter-in

Note) Meter-out and meter-in types can be visually identified by colour of the knob.
Meter-out: Grey
Meter-in: Light blue

Thread type

—	R
N	NPT

Port size

01	1/8
02	1/4
03	3/8
04	1/2

Made to Order
Refer to page 13 for details.

Push-lock type

Seal method

—	Without sealant
S	With sealant

Applicable tubing O.D. Note 1)

Metric size		Inch size	
23	Ø 3.2 Note 2)	01	Ø 1/8"
04	Ø 4	03	Ø 5/32"
06	Ø 6	07	Ø 1/4"
08	Ø 8	09	Ø 5/16"
10	Ø 10	11	Ø 3/8"
12	Ø 12	13	Ø 1/2"
16	Ø 16		

Note 1) For selecting applicable tubing O.D., refer to the "Model" on page 5.
Note 2) Use Ø 1/8" tube.

Made to Order

Made to Order
(For details, refer to page 13.)

Symbol	Specifications
-X12	Lubricant: Vaseline
-X21	Grease-free (Seal: Fluorine-coated) + Restrictor (Without check valve)
-X214	Restrictor (Without check valve)
10-	Clean Series

chanhvinh.com

Needle Valve/Flow-rate Characteristics

AS1201F-M5□, AS1211F-M5□
AS1301F-M5□, AS1311F-M5□

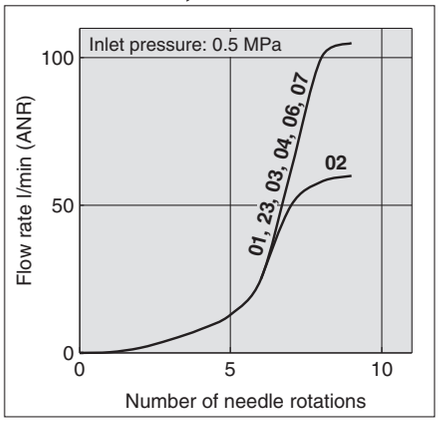

AS2201F-01, AS2211F-01
AS2301F-01, AS2311F-01

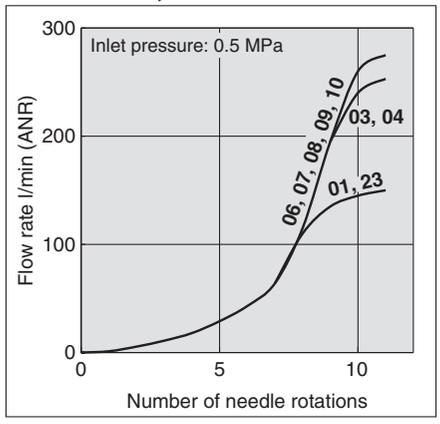

AS2201F-02, AS2211F-02
AS2301F-02, AS2311F-02

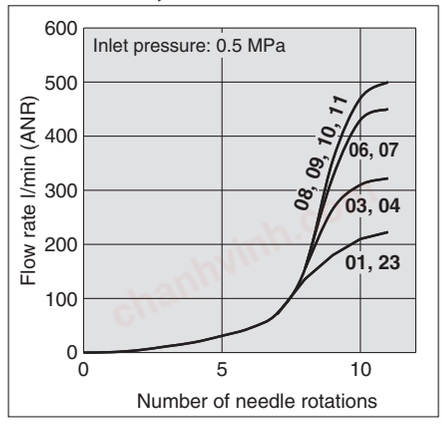

Note) -U10/32 has the same specification as M5.

AS3201F, AS3211F
AS3301F, AS3311F

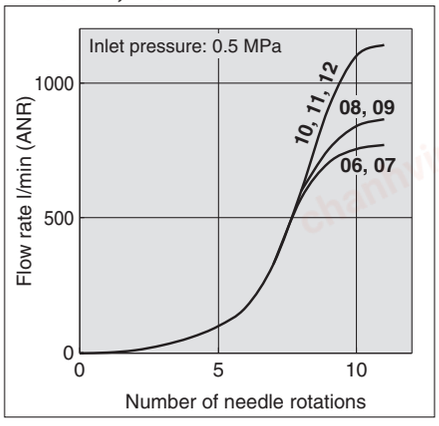

AS4201F, AS4211F
AS4301F, AS4311F

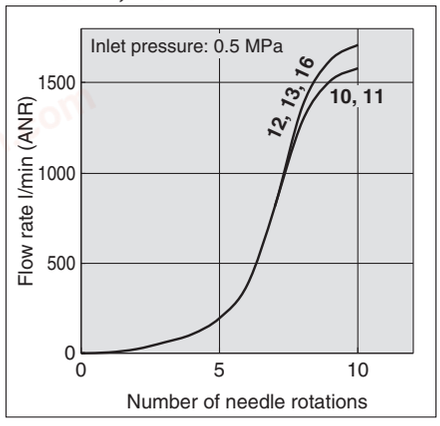

Note) The numbers above the flow-rate characteristic curves in the charts show the applicable tubing outside diameter as defined by the product number.

chanhvinh.com

Construction

Elbow type

Seal method: Gasket seal
For M5, 10-32UNF

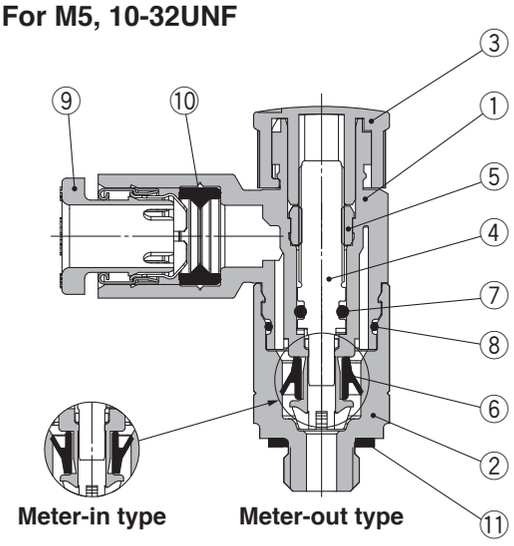

Seal method: Sealant
For R, NPT thread

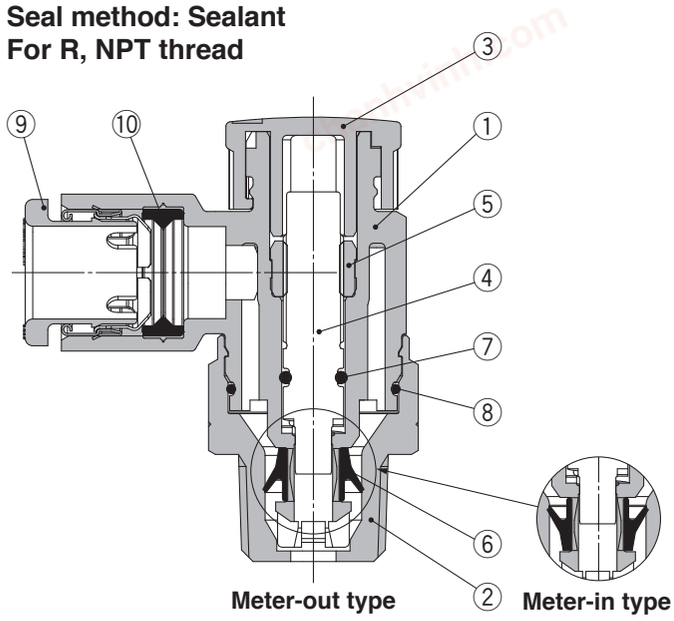

Component Parts

No.	Description	Material	Note
1	**Body A**	PBT	
2	**Body B**	Brass	Electroless nickel plating
3	**Knob**	POM	
4	**Needle**	PBT	
5	**Needle guide**	Brass	Electroless nickel plating
6	**U-seal**	HNBR	
7	**O-ring**	NBR	
8	**O-ring**	NBR	
9	**Cassette**	—	
10	**Seal**	NBR	
11	**Gasket**	NBR/Stainless steel	

Universal type

Seal method: Gasket seal
For M5, 10-32UNF

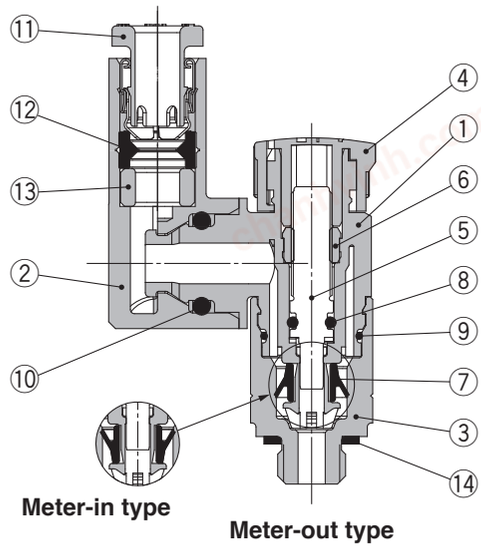

Seal method: Sealant
For R, NPT thread

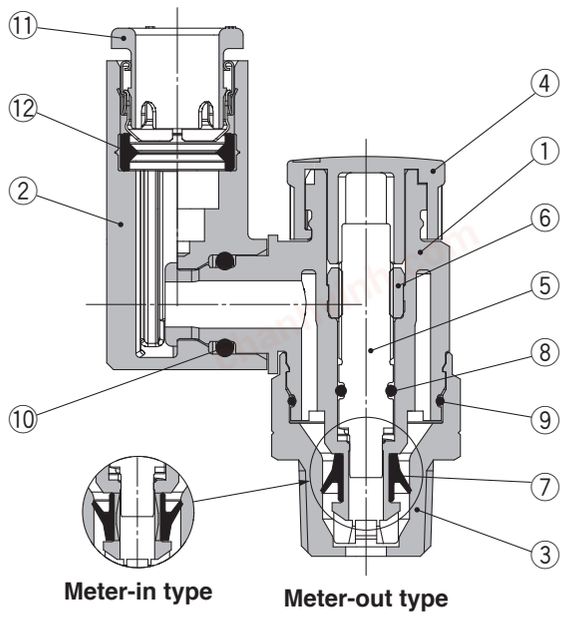

Component Parts

No.	Description	Material	Note
1	**Body A**	PBT	
2	**Elbow body**	PBT	
3	**Body B**	Brass	Electroless nickel plating
4	**Knob**	POM	
5	**Needle**	PBT	
6	**Needle guide**	Brass	Electroless nickel plating
7	**U-seal**	HNBR	
8	**O-ring**	NBR	
9	**O-ring**	NBR	
10	**O-ring**	NBR	
11	**Cassette**	—	
12	**Seal**	NBR	
13	**Spacer** Note)	PBT	
14	**Gasket**	NBR/Stainless steel	

Note) Spacer is included only for the applicable tubing O.D. Ø 3.2, Ø 1/8", Ø 4, Ø 5/32" and Ø 6.

chanhvinh.com

Dimensions/ Elbow type



Seal method: Gasket seal
For M5, 10-32UNF

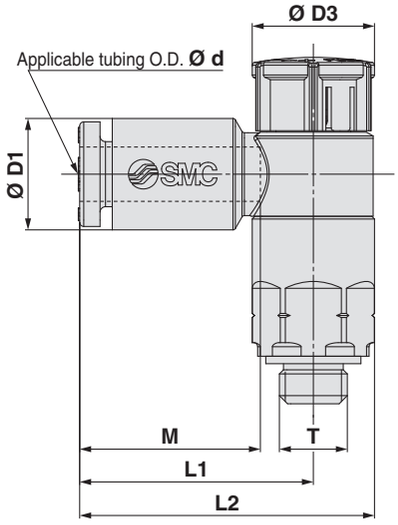

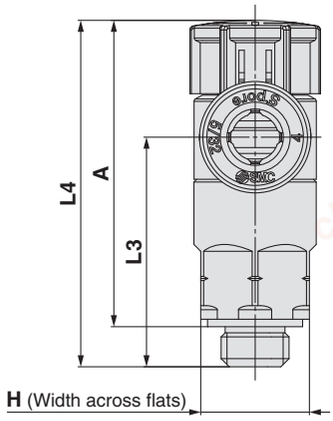

Metric Size

[mm]

Model	d	T	H Note 1)	D1	D3	L1	L2	L3	L4 Note 2)		A Note 3)		M	Weight [g]
									Unlocked	Locked	Unlocked	Locked		
AS12□1F-M5E-02A	2	M5 x 0.8 10/32UNF	8 (9)	5.8	9.4 (9.4)	15.8	20.3 (20.6)	16.9	26.5	25.4	23.5	22.4	11.9	5
AS12□1F-U10/32E-02A														
AS12□1F-M5E-23A	3.2			7.2		17.2	21.7 (22)						13.3	
AS12□1F-U10/32E-23A														
AS12□1F-M5E-04A	4			8.2										
AS12□1F-U10/32E-04A														
AS12□1F-M5E-06A	6			10.4		18.6	23.1 (23.4)	16.5						6
AS12□1F-U10/32E-06A														

Note 1) The value in ( ) indicates that the dimension for the width across flats is 9 mm.
Note 2) Reference dimensions
Note 3) Reference dimensions of threads after installation

Inch Size

[mm]

Model	d	T	H Note 1)	D1	D3	L1	L2	L3	L4 Note 2)		A Note 3)		M	Weight [g]
									Unlocked	Locked	Unlocked	Locked		
AS12□1F-M5E-01A	1/8"	M5 x 0.8 10/32UNF	8 (9)	7.2	9.4 (9.4)	17.2	21.7 (22)	16.9	26.5	25.4	23.5	22.4	13.3	5
AS12□1F-U10/32E-01A														
AS12□1F-M5E-03A	5/32"			8.2										
AS12□1F-U10/32E-03A														
AS12□1F-M5E-07A	1/4"			11.2		18.6	23.1 (23.4)	16.5						6
AS12□1F-U10/32E-07A														

Note 1) The value in ( ) indicates that the dimension for the width across flats is 9 mm.
Note 2) Reference dimensions
Note 3) Reference dimensions of threads after installation

chanhvinh.com

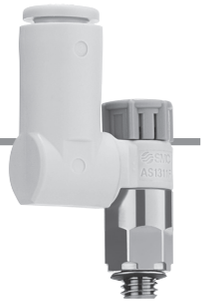

Dimensions/ Universal type

Seal method: Gasket seal
For M5, 10-32UNF

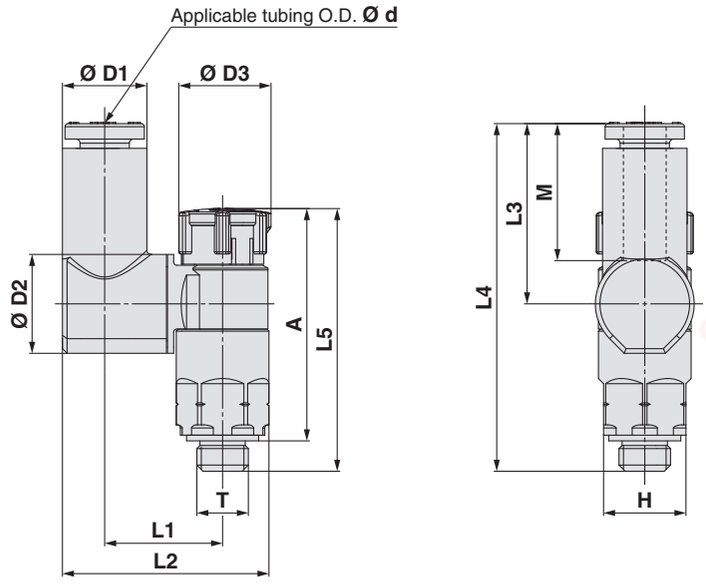

Metric Size

[mm]

Model	d	T	H Note 1)	D1	D2	D3	L1	L2	L3	L4	L5 Note 2)		A Note 3)		M	Weight [g]
											Unlocked	Locked	Unlocked	Locked		
AS13□1F-M5E-23A	3.2	M5 x 0.8 10/32UNF	8 (9)	7.2	9.6	9.4 (9.4)	11.6	19.4 (19.7)	17.5	33.8	26.5	25.4	23.5	22.4	13.3	6
AS13□1F-U10/32E-23A																
AS13□1F-M5E-04A	4			8.2			11.5	19.8 (20.1)								
AS13□1F-U10/32E-04A																
AS13□1F-M5E-06A	6			10.4				20.9 (21.7)	20.4	36.6						
AS13□1F-U10/32E-06A																

Note 1) The value in ( ) indicates that the dimension for the width across flats is 9 mm.
Note 2) Reference dimensions
Note 3) Reference dimensions of threads after installation

Inch Size

[mm]

Model	d	T Note 1)	H	D1	D2	D3	L1	L2	L3	L4	L5 Note 2)		A Note 3)		M	Weight [g]
											Unlocked	Locked	Unlocked	Locked		
AS13□1F-M5E-01A	1/8"	M5 x 0.8 10/32UNF	8 (9)	7.2	9.6	9.4 (9.4)	11.6	19.4 (19.7)	17.5	33.8	26.5	25.4	23.5	22.4	13.3	6
AS13□1F-U10/32E-01A																
AS13□1F-M5E-03A	5/32"			8.2			11.5	19.8 (20.1)								
AS13□1F-U10/32E-03A																
AS13□1F-M5E-07A	1/4"			11.2				21.3 (21.6)	20.2	36.5						
AS13□1F-U10/32E-07A																

Note 1) The value in ( ) indicates that the dimension for the width across flats is 9 mm.
Note 2) Reference dimensions
Note 3) Reference dimensions of threads after installation

chanhvinh.com

Dimensions/ Elbow type



Seal method: Sealant
For R, NPT thread

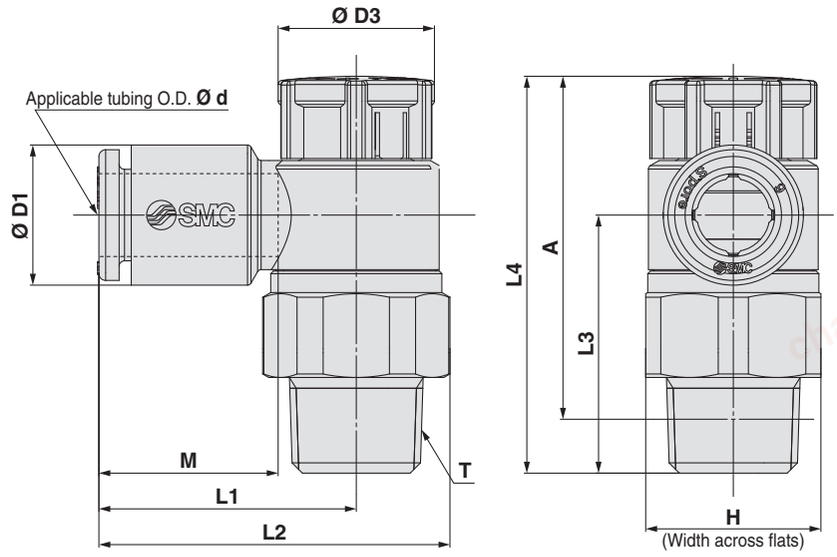

Metric Size

[mm]

Model	d	T	H	D1	D3	L1	L2	L3	L4 Note 1)		A Note 2)		M	Weight [g]
									Unlocked	Locked	Unlocked	Locked		
AS22□1F-01-23(S)A	3.2	1/8	13 (12.7)	7.2	12	19.1	26.2	19.1	30.6	29.2	27.5	26.1	13.3	9 (9)
AS22□1F-01-04(S)A	4			8.2										
AS22□1F-01-06(S)A	6			10.4										10 (9)
AS22□1F-01-08(S)A	8			13.2		22.4	29.5						14.2	11 (10)
AS22□1F-01-10(S)A	10			15.9		25.3	32.4						15.6	12 (11)
AS22□1F-02-23(S)A	3.2	1/4	17 (17.5)	7.2	13	20.9	30.2 (30.3)	22.6	36.6	35	31.1	29.5	13.3	18 (19)
AS22□1F-02-04(S)A	4			8.2										
AS22□1F-02-06(S)A	6			10.4		23.4	32.7 (32.8)							
AS22□1F-02-08(S)A	8			13.2		23.9	33.2 (33.3)						14.2	19 (20)
AS22□1F-02-10(S)A	10			15.9		26.9	36.2 (36.3)						15.6	20 (21)
AS32□1F-02-06(S)A	6	1/4	19	10.4	16.6	21.8	32.1	36.4	50	48.4	44.5	42.9	13.3	40 (40)
AS32□1F-02-08(S)A	8			13.2		22.7	33						14.2	41 (41)
AS32□1F-02-10(S)A	10			15.9		26.7	37	35.7					15.6	42 (42)
AS32□1F-02-12(S)A	12			18.5		29.7	40	34.5					17	43 (43)
AS32□1F-03-06(S)A	6	3/8	19	10.4	16.6	21.8	32.1	28.7	42.3	40.7	37.1	35.5	13.3	31 (32)
AS32□1F-03-08(S)A	8			13.2		22.7	33						14.2	
AS32□1F-03-10(S)A	10			15.9		26.7	37	28					15.6	32 (33)
AS32□1F-03-12(S)A	12			18.5		29.7	40	26.8					17	34 (35)
AS42□1F-04-10(S)A	10	1/2	24 (23.8)	15.9	18.8	27.4	40.3 (40.2)	36.2	50.8	49.2	43.7	42.1	15.6	54 (53)
AS42□1F-04-12(S)A	12			18.5		30.8	43.7 (43.6)	35.1					17	56 (55)
AS42□1F-04-16(S)A	16			23.8		34.8	47.7 (47.6)	32.7					20.6	60 (59)

Note 1) Reference dimensions Note 2) Reference dimensions of threads after installation Note 3) The values in ( ) are for NPT thread.

Inch Size

[mm]

Model	d	T	H	D1	D3	L1	L2	L3	L4 Note 1)		A Note 2)		M	Weight [g]
									Unlocked	Locked	Unlocked	Locked		
AS22□1F-01-01(S)A	1/8"	1/8	13 (12.7)	7.2	12	19.1	26.2	19.1	30.6	29.2	27.5	26.1	13.3	9 (9)
AS22□1F-01-03(S)A	5/32"			8.2										
AS22□1F-01-07(S)A	1/4"			11.2		20.8	27.9							10 (9)
AS22□1F-01-09(S)A	5/16"			13.2		22.4	29.5						14.2	11 (10)
AS22□1F-02-01(S)A	1/8"	1/4	17 (17.5)	7.2	13	20.9	30.2 (30.3)	22.6	36.6	35	31.1	29.5	13.3	18 (19)
AS22□1F-02-03(S)A	5/32"			8.2										
AS22□1F-02-07(S)A	1/4"			11.2		23.4	32.7 (32.8)							19 (19)
AS22□1F-02-09(S)A	5/16"			13.2		23.9	33.2 (33.3)						14.2	19 (20)
AS22□1F-02-11(S)A	3/8"			15.5		26.4	35.7 (35.8)						15.6	20 (21)
AS32□1F-02-07(S)A	1/4"	1/4	19	11.2	16.6	21.8	32.1	36.4	50	48.4	44.5	42.9	13.3	40 (40)
AS32□1F-02-09(S)A	5/16"			13.2		22.7	33						14.2	41 (41)
AS32□1F-02-11(S)A	3/8"			15.5		26.7	37	35.9					15.6	
AS32□1F-03-07(S)A	1/4"	3/8	19	11.2	16.6	21.8	32.1	28.7	42.3	40.7	37.1	35.5	13.3	31 (32)
AS32□1F-03-09(S)A	5/16"			13.2		22.7	33						14.2	
AS32□1F-03-11(S)A	3/8"			15.5		26.7	37	28.2					15.6	32 (33)
AS42□1F-04-11(S)A	3/8"	1/2	24 (23.8)	15.5	18.8	27.4	40.3 (40.2)	36.2	50.8	49.2	43.7	42.1	15.6	54 (53)
AS42□1F-04-13(S)A	1/2"			19.3		30.9	43.8 (43.7)	34.7					17	56 (55)

Note 1) Reference dimensions Note 2) Reference dimensions of threads after installation Note 3) The values in ( ) are for NPT thread.

chanhvinh.com



Dimensions/ Universal type

Seal method: Sealant
For R, NPT thread

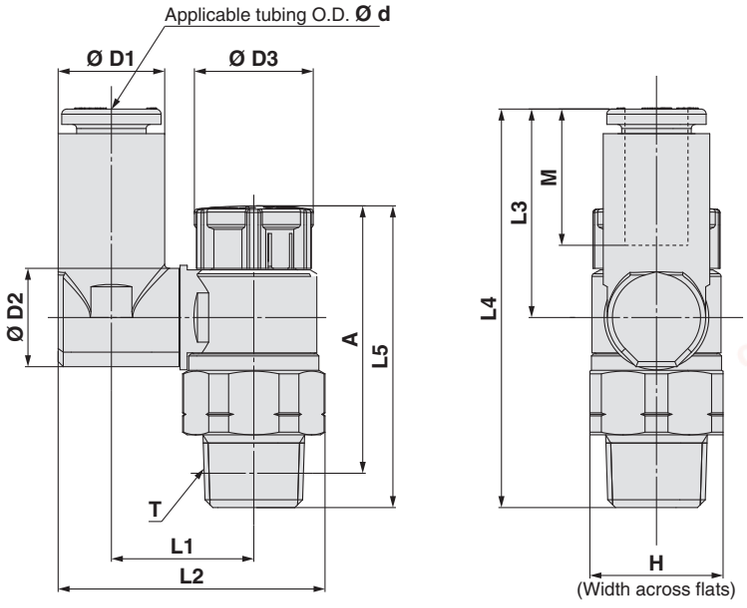

Metric Size

[mm]

Model	d	T	H	D1	D2	D3	L1	L2	L3	L4	L5 Note 1) Unlocked	L5 Note 1) Locked	A Note 2) Unlocked	A Note 2) Locked	M	Weight [g]
AS23□1F-01-23(S)A	3.2	1/8	13 (12.7)	7.2	9.6	12	13.3	24	17.5	36	30.6	29.2	27.5	26.1	13.3	10 (10)
AS23□1F-01-04(S)A	4			8.2			13.9	25.1								
AS23□1F-01-06(S)A	6			10.4				26.2	20.4	38.8						11 (10)
AS23□1F-01-08(S)A	8			13.2	10.2		16.4	30.1	21.5	40					14.2	12 (12)
AS23□1F-02-04(S)A	4	1/4	17 (17.5)	8.2	12.9	13	16.5	29.9 (30)	17.5	40.1	36.6	35	31.1	29.5	13.3	19 (20)
AS23□1F-02-06(S)A	6			11.2			19	33.8 (33.9)	21.4	43.9						21 (22)
AS23□1F-02-08(S)A	8			13.2				34.9 (35)	23.5	46					14.2	22 (22)
AS23□1F-02-10(S)A	10			15.9			20.9	38.1 (38.2)	24.7	47.3					15.6	23 (24)
AS33□1F-02-06(S)A	6	1/4	19	11.2	12.9	16.6	20.2	36	21.4	57.8	50	48.4	44.5	42.9	13.3	42 (42)
AS33□1F-02-08(S)A	8			13.2				37.1	23.5	59.9					14.2	43 (43)
AS33□1F-02-10(S)A	10			15.9	17.4		23	41.2	26.1	62.5					15.6	46 (46)
AS33□1F-02-12(S)A	12			18.5				42.5	28.3	64.7					17	48 (48)
AS33□1F-03-06(S)A	6	3/8	19	11.2	12.9	16.6	20.2	36	21.4	50.1	42.3	40.7	37.1	35.5	13.3	34 (35)
AS33□1F-03-08(S)A	8			13.2				37.1	23.5	52.2					14.2	35 (36)
AS33□1F-03-10(S)A	10			15.9	17.4		23	41.2	26.1	54.8					15.6	38 (39)
AS33□1F-03-12(S)A	12			18.5				42.5	28.3	57					17	40 (41)
AS43□1F-04-10(S)A	10	1/2	24 (23.8)	15.9	17.4	18.8	25.6	46.4 (46.3)	26.1	61.2	50.8	49.2	43.7	42.1	15.6	61 (59)
AS43□1F-04-12(S)A	12			18.5	21		26.2	48.3 (48.2)	28.3	63.4					17	64 (63)

Note 1) Reference dimensions Note 2) Reference dimensions of threads after installation Note 3) The values in ( ) are for NPT thread.

Inch Size

[mm]

Model	d	T	H	D1	D2	D3	L1	L2	L3	L4	L5 Note 1) Unlocked	L5 Note 1) Locked	A Note 2) Unlocked	A Note 2) Locked	M	Weight [g]
AS23□1F-01-01(S)A	1/8"	1/8	13 (12.7)	7.2	9.6	12	13.3	24	17.5	36	30.6	29.2	27.5	26.1	13.3	10 (10)
AS23□1F-01-03(S)A	5/32"			8.2			13.9	25.1								
AS23□1F-01-07(S)A	1/4"			11.2	10.2		16.4	29.1	20.2	38.7						11 (10)
AS23□1F-01-09(S)A	5/16"			13.2				30.1	21.5	40					14.2	12 (12)
AS23□1F-02-03(S)A	5/32"	1/4	17 (17.5)	8.2	12.9	13	16.5	29.9 (30)	17.5	40.1	36.6	35	31.1	29.5	13.3	19 (20)
AS23□1F-02-07(S)A	1/4"			11.2			19	33.8 (33.9)	21.4	43.9						21 (22)
AS23□1F-02-09(S)A	5/16"			13.2				34.9 (35)	23.5	46					14.2	22 (22)
AS23□1F-02-11(S)A	3/8"			15.9			20.9	38.1 (38.2)	24.7	47.3					15.6	23 (24)
AS33□1F-02-07(S)A	1/4"	3/8	19	11.2	12.9	16.6	20.2	36	21.4	57.8	50	48.4	44.5	42.9	13.3	42 (42)
AS33□1F-02-09(S)A	5/16"			13.2				37.1	23.5	59.9					14.2	43 (43)
AS33□1F-02-11(S)A	3/8"			15.9	17.4		23	41.2	26.1	62.5					15.6	46 (46)
AS33□1F-03-07(S)A	1/4"	3/8	19	11.2	12.9	16.6	20.2	36	21.4	50.1	42.3	40.7	37.1	35.5	13.3	34 (35)
AS33□1F-03-09(S)A	5/16"			13.2				37.1	23.5	52.2					14.2	35 (36)
AS33□1F-03-11(S)A	3/8"			15.9	17.4		23	41.2	26.1	54.8					15.6	38 (39)
AS43□1F-04-11(S)A	3/8"	1/2	24 (23.8)	15.9	17.4	18.8	25.6	46.4 (46.3)	26.1	61.2	50.8	49.2	43.7	42.1	15.6	61 (59)
AS43□1F-04-13(S)A	1/2"			18.5	21		26.2	48.3 (48.2)	28.3	63.4					17	64 (63)

Note 1) Reference dimensions Note 2) Reference dimensions of threads after installation Note 3) The values in ( ) are for NPT thread.

chanhvinh.com

Series AS
Made to Order

Please contact SMC for detailed dimensions, specifications and delivery.

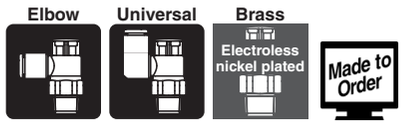

1 Lubricant: Vaseline -X12

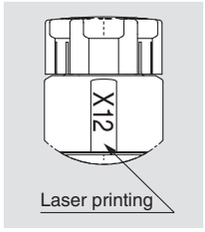

Example) AS2201F-01-04SA-X12

2 Grease-free (Seal: Fluorine-coated) + Restrictor (Without check valve) -X21

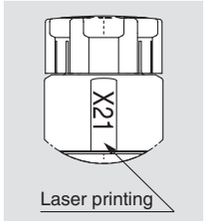

Example) AS2201F-01-04SA-X21

Note 1) Not particle-free
Note 2) This product is a restrictor without a check valve (no control direction). Be aware that all part numbers are for a meter-out type; there is no part number for a meter-in type.
Note 3) Only the needle and O-ring are fluorine-coated.

3 Restrictor (Without check valve) -X214

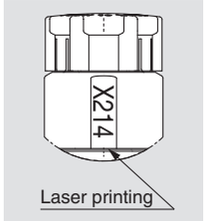

Example) AS2201F-01-04SA-X214

Note) This product is a restrictor without a check valve (no control direction). Be aware that all part numbers are for a meter-out type; there is no part number for a meter-in type.

4 Clean Series 10-

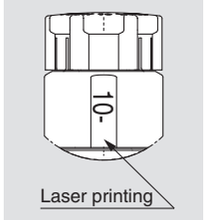

Example) 10-AS2201F-01-04SA

Note 1) Fluorine grease is used.
Note 2) The cleanliness class (ISO class) is 5.
Note 3) Excluding G thread type.

chanhvinh.com

Speed Controller with One-touch Fitting Stainless Steel Type Elbow Type/Universal Type

Series AS-FG

RoHS



Model

Model		Port size		Seal method	Applicable tubing O.D.													
					Metric size								Inch size					
Elbow type	Universal type				2 (Note 2)	3.2	4	6	8	10	12	16	1/8"	5/32"	1/4"	5/16"	3/8"	1/2"
AS12□1FG-M5	AS13□1FG-M5	M5 x 0.8		Gasket seal	● (Note 3)	●	●	●					●	●	●			
AS12□1FG-U10/32	AS13□1FG-U10/32	10-32UNF		Gasket seal	● (Note 3)	●	●	●					●	●	●			
AS22□1FG-□01	AS23□1FG-□01	R NPT	1/8	Sealant (Note 1)		●	●	●	●	● (Note 3)			●	●	●	●		
AS22□1FG-□02	AS23□1FG-□02	R NPT	1/4	Sealant (Note 1)		● (Note 3)	●	●	●	●			● (Note 3)	●	●	●	●	
AS32□1FG-□02	AS33□1FG-□02	R NPT	1/4	Sealant (Note 1)				●	●	●	●				●	●	●	
AS32□1FG-□03	AS33□1FG-□03	R NPT	3/8	Sealant (Note 1)				●	●	●	●				●	●	●	
AS42□1FG-□04	AS43□1FG-□04	R NPT	1/2	Sealant (Note 1)						●	●	● (Note 3)					●	●
AS22□1FG-G01	AS23□1FG-G01	G	1/8	Face seal		●	●	●	●	● (Note 3)								
AS22□1FG-G02	AS23□1FG-G02	G	1/4	Face seal		● (Note 3)	●	●	●	●								
AS32□1FG-G02	AS33□1FG-G02	G	1/4	Face seal				●	●	●	●							
AS32□1FG-G03	AS33□1FG-G03	G	3/8	Face seal				●	●	●	●							
AS42□1FG-G04	AS43□1FG-G04	G	1/2	Face seal						●	●	● (Note 3)						

Note 1) "Without sealant" type can be selected as a standard option.
Note 2) Only polyurethane tubing is applicable for Ø 2.
Note 3) Universal type is not available.

Flow Direction Symbols on Body

	Meter-out	Meter-in
Symbol		

Specifications

Fluid	Air
Proof pressure	1.5 MPa
Max. operating pressure	1 MPa
Min. operating pressure	0.1 MPa
Ambient and fluid temperature	–5 to 60 °C (No freezing)
Applicable tubing material	Nylon, Soft nylon, Polyurethane (Note), FEP, PFA

Note) Use caution at the max. operating pressure when using soft nylon or polyurethane tubing. (Refer to the WEB catalogue for details.)

⚠ Caution

Be sure to read this before handling. Refer to the back cover for Safety Instructions. For Flow Control Equipment Precautions, refer to "Handling Precautions for SMC Products" and the Operation Manual.

Flow Rate and Sonic Conductance

Model		AS12□1FG-M5 AS13□1FG-M5	AS22□1FG-□01 AS23□1FG-□01				AS22□1FG-□02 AS23□1FG-□02				AS32□1FG AS33□1FG			AS42□1FG AS43□1FG	
Tubing O.D.	Metric size	Ø 2	Ø 3.2 Ø 4 Ø 6	Ø 3.2	Ø 4	Ø 6 Ø 8 Ø 10	Ø 3.2	Ø 4	Ø 6	Ø 8 Ø 10	Ø 6	Ø 8	Ø 10 Ø 12	Ø 10	Ø 12 Ø 16
	Inch size	—	Ø 1/8" Ø 1/4" Ø 5/32"	Ø 1/8"	Ø 5/32"	Ø 1/4" Ø 5/16"	Ø 1/8"	Ø 5/32"	—	Ø 1/4" Ø 5/16" Ø 3/8"	Ø 1/4"	Ø 5/16"	Ø 3/8"	Ø 3/8"	Ø 1/2"
C values: Sonic conductance dm³/(s·bar)	Free flow	0.2	0.3	0.4	0.6	0.6	0.7	1.0	1.3	1.5	1.6	1.7	2.5	4.4	4.8
	Controlled flow	0.2	0.3	0.4	0.7	0.8	0.6	0.9	1.3		2.1	2.4	3.3	4.4	4.9
b values: Critical pressure ratio	Free flow	0.3	0.4	0.2		0.3	0.3		0.4		0.4		0.3	0.3	
	Controlled flow	0.2		0.2		0.3	0.3				0.3			0.3	

Note 1) 10-32UNF has the same specification as M5.
Note 2) C and b values are for controlled flow with the needle fully open and free flow with the needle fully closed.

chanhvinh.com

Series AS-FG

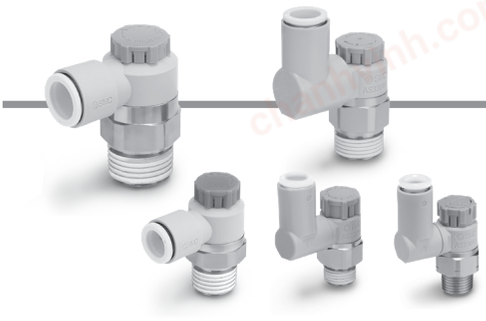

Elbow | Universal | Stainless steel



How to Order

Applicable tubing O.D. Note1)

Metric size		Inch size	
02	Ø 2	01	Ø 1/8"
23	Ø 3.2 Note 2)	03	Ø 5/32"
04	Ø 4	07	Ø 1/4"
06	Ø 6		

Note 1) For selecting applicable tubing O.D., refer to the "Model" on page 14. The colour of the release button is white (metric, inch).
Note 2) Use Ø 1/8" tube.

Body size

1	M5 x 0.8 10-32UNF

Port size

M5	M5 x 0.8
U10/32	10-32UNF

Body size 1

AS 1 2 0 1 F G – M5 – 06 A –

Body size 2/3/4

AS 2 2 0 1 F G – 01 – 06 S A –

Body size

2	1/8, 1/4
3	3/8
4	1/2

Type

2	Elbow
3	Universal

Control type Note)

0	Meter-out
1	Meter-in

Note) Meter-out and meter-in types can be visually identified by colour of the knob.
Meter-out: Grey
Meter-in: Light blue

Stainless steel type (Stainless steel 303)

Note 1) The material can be visually identified by colour of the release button.
Stainless steel type: White
Note 2) White is also used for inch size.

Thread type

—	R
N	NPT
G	G

Port size

01	1/8
02	1/4
03	3/8
04	1/2

Made to Order
Refer to page 25 for details.

Push-lock type

Seal method

—	Without sealant
S	With sealant

Note) Face seal method is used for the G thread type.
Select "—/Without sealant."
Example) AS2201FG-G01-06A

Applicable tubing O.D. Note1)

Metric size		Inch size Note 3)	
23	Ø 3.2 Note 2)	01	Ø 1/8"
04	Ø 4	03	Ø 5/32"
06	Ø 6	07	Ø 1/4"
08	Ø 8	09	Ø 5/16"
10	Ø 10	11	Ø 3/8"
12	Ø 12	13	Ø 1/2"
16	Ø 16		

Note 1) For selecting applicable tubing O.D., refer to the "Model" on page 14. The colour of the release button is white (metric, inch).
Note 2) Use Ø 1/8" tube.
Note 3) Only the metric size is available for the G thread type.

chanhvinh.com

Needle Valve/Flow-rate Characteristics

AS1201FG-M5, AS1211FG-M5
AS1301FG-M5, AS1311FG-M5

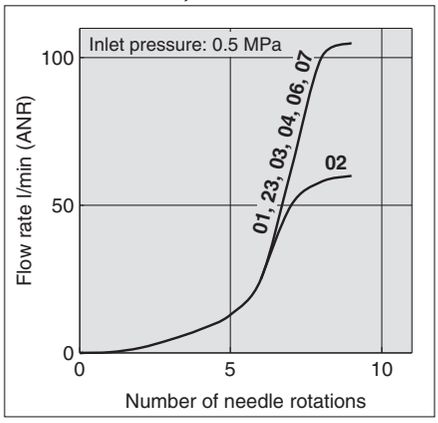

Note) -U10/32 has the same specification as M5.

AS2201FG-01, AS2211FG-01
AS2301FG-01, AS2311FG-01

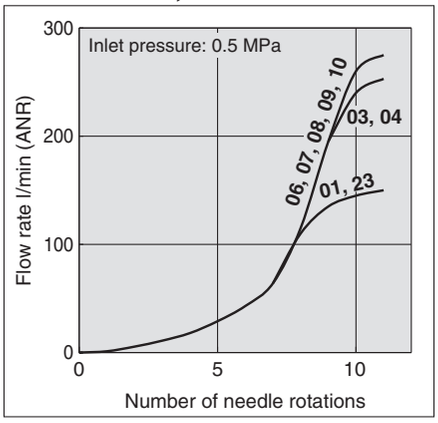

AS2201FG-02, AS2211FG-02
AS2301FG-02, AS2311FG-02

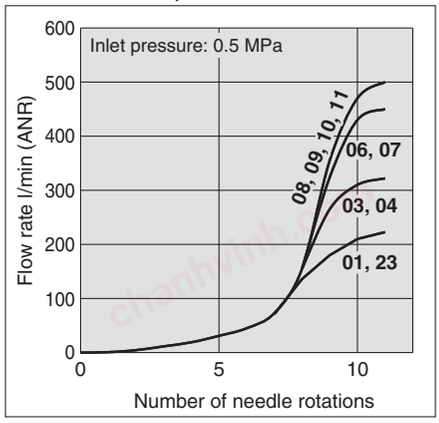

AS3201FG, AS3211FG
AS3301FG, AS3311FG

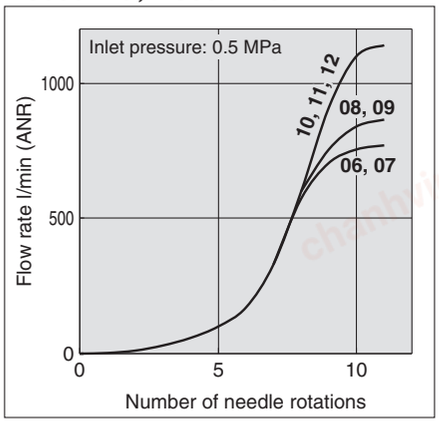

AS4201FG, AS4211FG
AS4301FG, AS4311FG

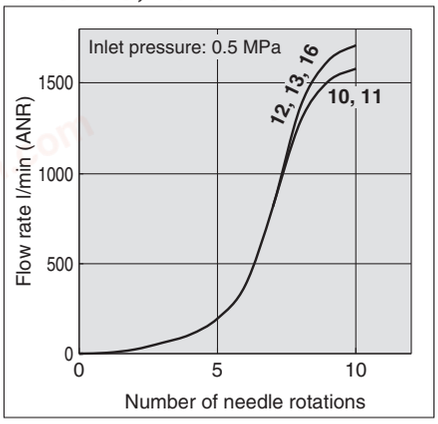

Note) The numbers above the flow-rate characteristic curves in the charts show the applicable tubing outside diameter as defined by the product number.

chanhvinh.com

Series AS-FG

Construction

Elbow type

Seal method: Gasket seal
For M5, 10-32UNF

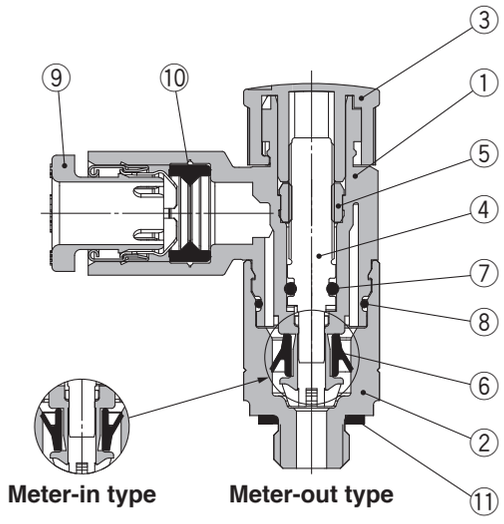

Seal method: Sealant
For R, NPT thread

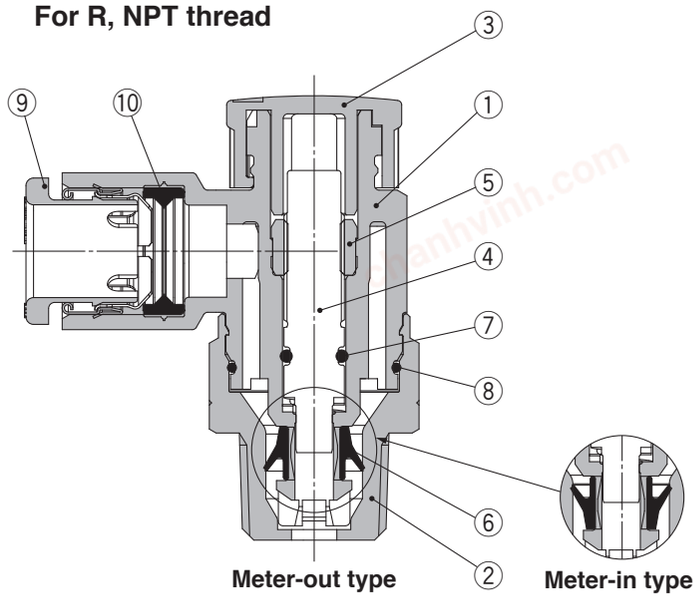

Seal method: Face seal
For G thread

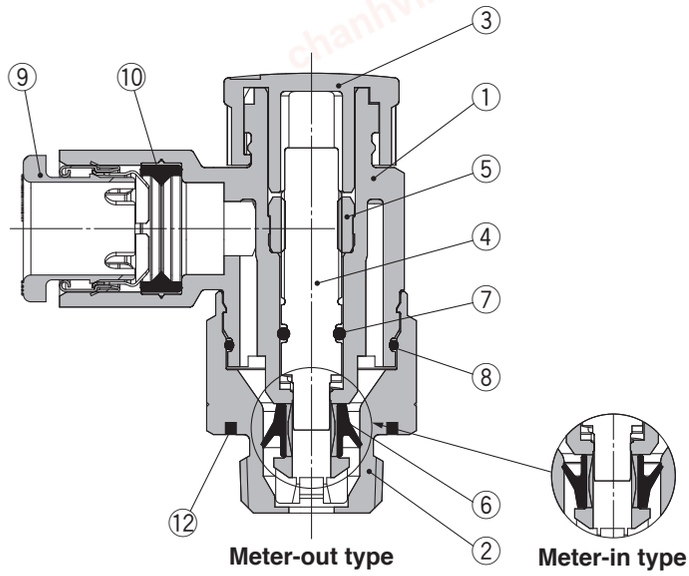

Component Parts

No.	Description	Material	Note
1	**Body A**	PBT	
2	**Body B**	Stainless steel	
3	**Knob**	POM	
4	**Needle**	PBT	
5	**Needle guide**	Stainless steel	
6	**U-seal**	HNBR	
7	**O-ring**	NBR	
8	**O-ring**	NBR	
9	**Cassette**	—	
10	**Seal**	NBR	
11	**Gasket**	NBR/Stainless steel	
12	**Seal**	NBR	

chanhvinh.com

Construction

Universal type

Seal method: Gasket seal
For M5, 10-32UNF

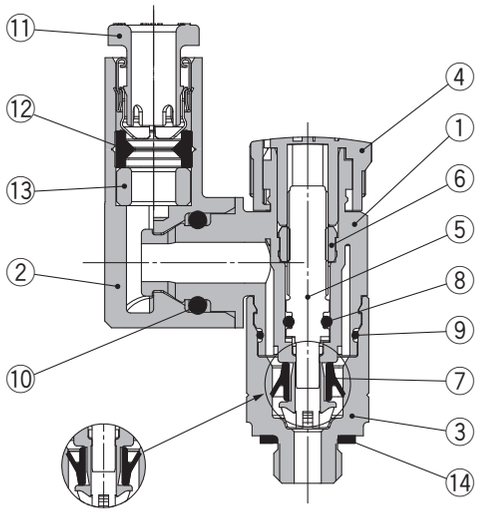

Meter-in type Meter-out type

Seal method: Face seal
For G thread

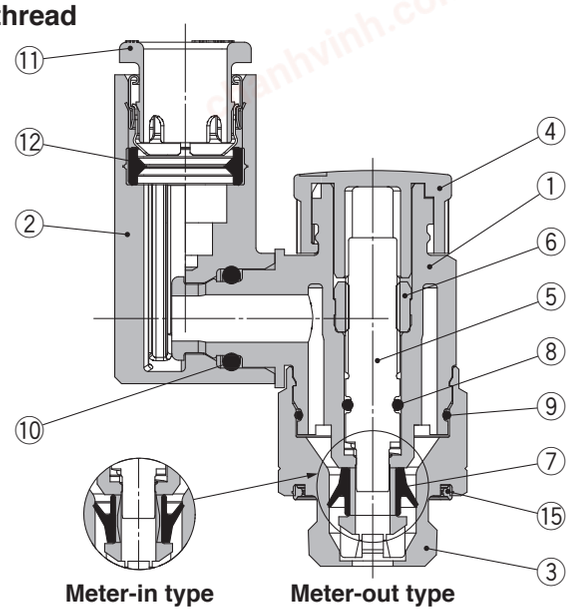

Meter-in type Meter-out type

Seal method: Sealant
For R, NPT thread

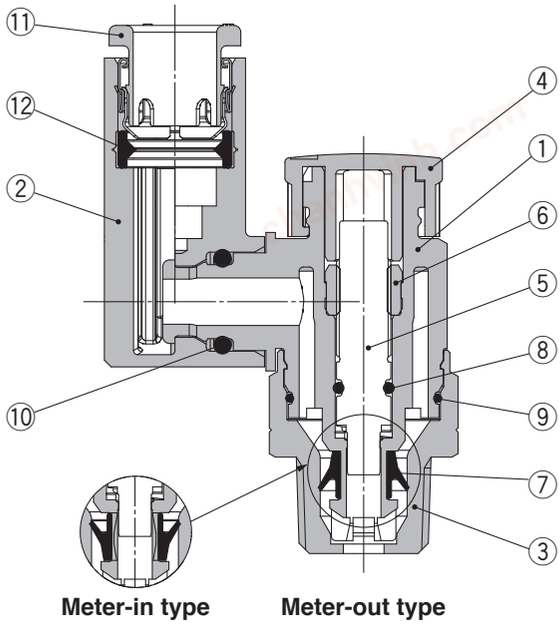

Meter-in type Meter-out type

Component Parts

No.	Description	Material	Note
1	**Body A**	PBT	
2	**Elbow body**	PBT	
3	**Body B**	Stainless steel	
4	**Knob**	POM	
5	**Needle**	PBT	
6	**Needle guide**	Stainless steel	
7	**U-seal**	HNBR	
8	**O-ring**	NBR	
9	**O-ring**	NBR	
10	**O-ring**	NBR	
11	**Cassette**	—	
12	**Seal**	NBR	
13	**Spacer** Note)	PBT	
14	**Gasket**	NBR/Stainless steel	
15	**Seal**	NBR	

Note) Spacer is included only for the applicable tubing O.D. Ø 3.2 and Ø 1/8".

chanhvinh.com

Series AS-FG For M5, 10-32UNF

Dimensions/ Elbow type



Seal method: Gasket seal
For M5, 10-32UNF

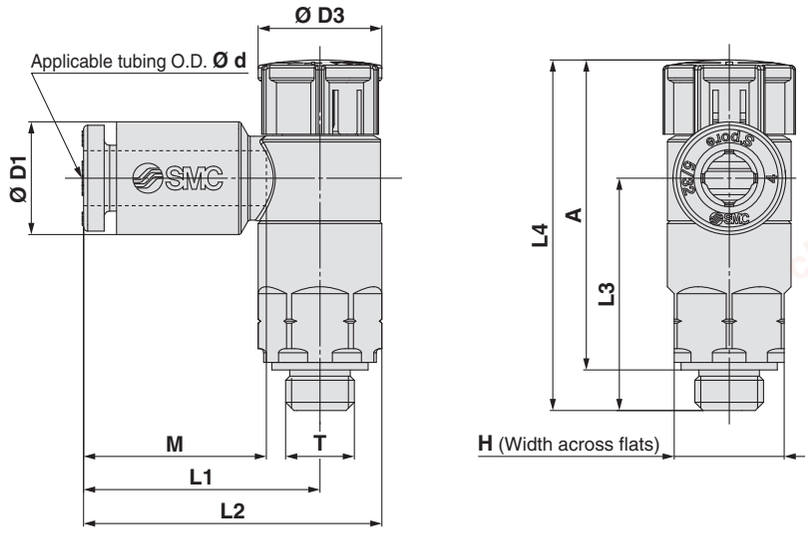

Metric Size

[mm]

Model	d	T	H	D1	D3	L1	L2	L3	L4 Note 1)		A Note 2)		M	Weight [g]
									Unlocked	Locked	Unlocked	Locked		
AS12□1FG-M5-02A	2	M5 x 0.8 10/32UNF	8	5.8	9.4	15.8	20.3	16.9	26.5	25.4	23.5	22.4	11.9	5
AS12□1FG-U10/32-02A														
AS12□1FG-M5-23A	3.2			7.2		17.2	21.7						13.3	
AS12□1FG-U10/32-23A														
AS12□1FG-M5-04A	4			8.2										
AS12□1FG-U10/32-04A														
AS12□1FG-M5-06A	6			10.4		18.6	23.1	16.5						6
AS12□1FG-U10/32-06A														

Note 1) Reference dimensions
Note 2) Reference dimensions of threads after installation

Inch Size

[mm]

Model	d	T	H	D1	D3	L1	L2	L3	L4 Note 1)		A Note 2)		M	Weight [g]
									Unlocked	Locked	Unlocked	Locked		
AS12□1FG-M5-01A	1/8"	M5 x 0.8 10/32UNF	8	7.2	9.4	17.2	21.7	16.9	26.5	25.4	23.5	22.4	13.3	5
AS12□1FG-U10/32-01A														
AS12□1FG-M5-03A	5/32"			8.2										
AS12□1FG-U10/32-03A														
AS12□1FG-M5-07A	1/4"			11.2		18.6	23.1	16.5						6
AS12□1FG-U10/32-07A														

Note 1) Reference dimensions
Note 2) Reference dimensions of threads after installation

chanhvinh.com

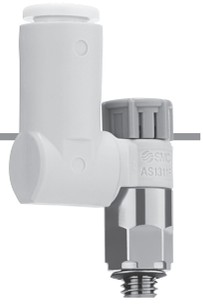

Dimensions/ Universal type

Seal method: Gasket seal
For M5, 10-32UNF

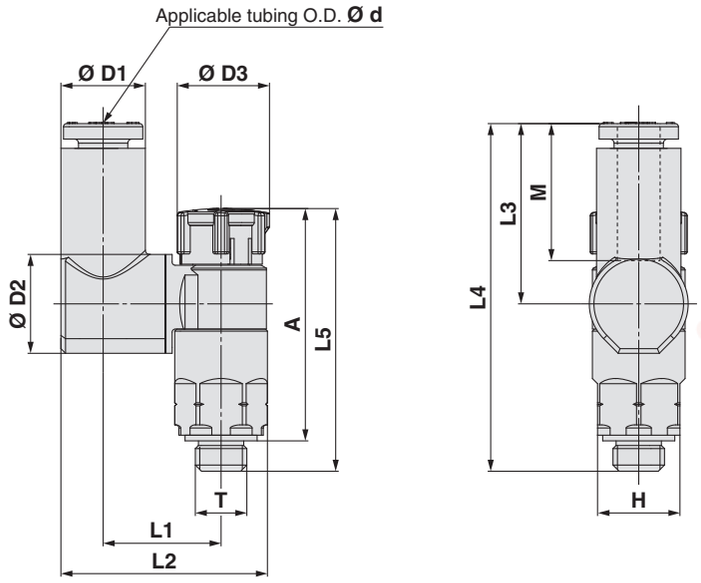

Metric Size

[mm]

Model	d	T	H	D1	D2	D3	L1	L2	L3	L4	L5 Note 1) Unlocked	L5 Note 1) Locked	A Note 2) Unlocked	A Note 2) Locked	M	Weight [g]
AS13□1FG-M5-23A	3.2	M5 x 0.8 10/32UNF	8	7.2	9.6	9.4	11.6	19.7	17.5	33.8	26.5	25.4	23.5	22.4	13.3	6
AS13□1FG-U10/32-23A																
AS13□1FG-M5-04A	4			8.2			11.5	20.1								
AS13□1FG-U10/32-04A																
AS13□1FG-M5-06A	6			10.4				21.2	20.4	36.6						
AS13□1FG-U10/32-06A																

Note 1) Reference dimensions
Note 2) Reference dimensions of threads after installation

Inch Size

[mm]

Model	d	T	H	D1	D2	D3	L1	L2	L3	L4	L5 Note 1) Unlocked	L5 Note 1) Locked	A Note 2) Unlocked	A Note 2) Locked	M	Weight [g]
AS13□1FG-M5-01A	1/8"	M5 x 0.8 10/32UNF	8	7.2	9.6	9.4	11.6	19.7	17.5	33.8	26.5	25.4	23.5	22.4	13.3	6
AS13□1FG-U10/32-01A																
AS13□1FG-M5-03A	5/32"			8.2			11.5	20.1								
AS13□1FG-U10/32-03A																
AS13□1FG-M5-07A	1/4"			11.2				21.6	20.2	36.5						
AS13□1FG-U10/32-07A																

Note 1) Reference dimensions
Note 2) Reference dimensions of threads after installation

chanhvinh.com

Series AS-FG For R, NPT thread

Dimensions/ Elbow type



Seal method: Sealant
For R, NPT thread

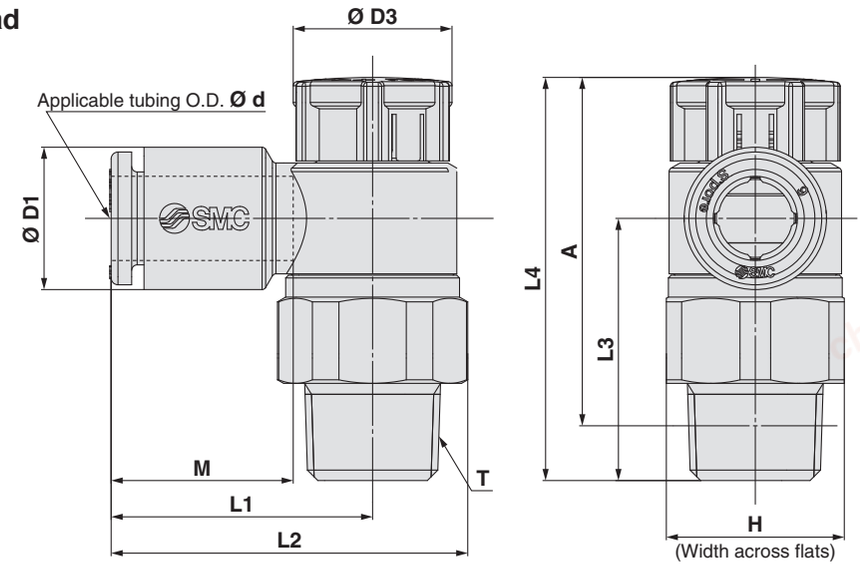

Metric Size

[mm]

Model	d	T	H	D1	D3	L1	L2	L3	L4 Note 1)		A Note 1)		M	Weight [g]
									Unlocked	Locked	Unlocked	Locked		
AS22□1FG-01-23(S)A	3.2	1/8	13 (12.7)	7.2	12	19.1	26.2	19.1	30.6	29.2	27.5	26.1	13.3	9 (9)
AS22□1FG-01-04(S)A	4			8.2										
AS22□1FG-01-06(S)A	6			10.4										10 (9)
AS22□1FG-01-08(S)A	8			13.2		22.4	29.5						14.2	11 (10)
AS22□1FG-01-10(S)A	10			15.9		25.3	32.4						15.6	12 (11)
AS22□1FG-02-23(S)A	3.2	1/4	17 (17.5)	7.2	13	20.9	30.2 (30.3)	22.6	36.6	35	31.1	29.5	13.3	17 (18)
AS22□1FG-02-04(S)A	4			8.2										
AS22□1FG-02-06(S)A	6			10.4		23.4	32.7 (32.8)							
AS22□1FG-02-08(S)A	8			13.2		23.9	33.2 (33.3)						14.2	18 (19)
AS22□1FG-02-10(S)A	10			15.9		26.9	36.2 (36.3)						15.6	19 (20)
AS32□1FG-02-06(S)A	6	1/4	19	10.4	16.6	21.8	32.1	36.4	50	48.4	44.5	42.9	13.3	40 (40)
AS32□1FG-02-08(S)A	8			13.2		22.7	33						14.2	41 (41)
AS32□1FG-02-10(S)A	10			15.9		26.7	37	35.7					15.6	42 (42)
AS32□1FG-02-12(S)A	12			18.5		29.7	40	34.5					17	43 (43)
AS32□1FG-03-06(S)A	6	3/8	19	10.4	16.6	21.8	32.1	28.7	42.3	40.7	37.1	35.5	13.3	29 (30)
AS32□1FG-03-08(S)A	8			13.2		22.7	33						14.2	
AS32□1FG-03-10(S)A	10			15.9		26.7	37	28					15.6	30 (31)
AS32□1FG-03-12(S)A	12			18.5		29.7	40	26.8					17	32 (33)
AS42□1FG-04-10(S)A	10	1/2	24 (23.8)	15.9	18.8	27.4	40.3 (40.2)	36.2	50.8	49.2	43.7	42.1	15.6	52 (51)
AS42□1FG-04-12(S)A	12			18.5		30.8	43.7 (43.6)	35.1					17	54 (53)
AS42□1FG-04-16(S)A	16			23.8		34.8	47.7 (47.6)	32.7					20.6	58 (57)

Note 1) Reference dimensions Note 2) Reference dimensions of threads after installation Note 3) The values in ( ) are for NPT thread.

Inch Size

[mm]

Model	d	T	H	D1	D3	L1	L2	L3	L4 Note 1)		A Note 2)		M	Weight [g]
									Unlocked	Locked	Unlocked	Locked		
AS22□1FG-01-01(S)A	1/8"	1/8	13 (12.7)	7.2	12	19.1	26.2	19.1	30.6	29.2	27.5	26.1	13.3	9 (9)
AS22□1FG-01-03(S)A	5/32"			8.2										
AS22□1FG-01-07(S)A	1/4"			11.2		20.8	27.9							10 (9)
AS22□1FG-01-09(S)A	5/16"			13.2		22.4	29.5						14.2	11 (10)
AS22□1FG-02-01(S)A	1/8"	1/4	17 (17.5)	7.2	13	20.9	30.2 (30.3)	22.6	36.6	35	31.1	29.5	13.3	17 (18)
AS22□1FG-02-03(S)A	5/32"			8.2										
AS22□1FG-02-07(S)A	1/4"			11.2		23.4	32.7 (32.8)							18 (18)
AS22□1FG-02-09(S)A	5/16"			13.2		23.9	33.2 (33.3)						14.2	18 (19)
AS22□1FG-02-11(S)A	3/8"			15.5		26.4	35.7 (35.8)						15.6	19 (20)
AS32□1FG-02-07(S)A	1/4"	1/4	19	11.2	16.6	21.8	32.1	36.4	50	48.4	44.5	42.9	13.3	40 (40)
AS32□1FG-02-09(S)A	5/16"			13.2		22.7	33						14.2	41 (41)
AS32□1FG-02-11(S)A	3/8"			15.5		26.7	37	35.9					15.6	
AS32□1FG-03-07(S)A	1/4"	3/8	19	11.2	16.6	21.8	32.1	28.7	42.3	40.7	37.1	35.5	13.3	29 (30)
AS32□1FG-03-09(S)A	5/16"			13.2		22.7	33						14.2	
AS32□1FG-03-11(S)A	3/8"			15.5		26.7	37	28.2					15.6	30 (31)
AS42□1FG-04-11(S)A	3/8"	1/2	24 (23.8)	15.5	18.8	27.4	40.3 (40.2)	36.2	50.8	49.2	43.7	42.1	15.6	52 (51)
AS42□1FG-04-13(S)A	1/2"			19.3		30.9	43.8 (43.7)	34.7					17	54 (53)

Note 1) Reference dimensions Note 2) Reference dimensions of threads after installation Note 3) The values in ( ) are for NPT thread.

chanhvinh.com



Dimensions/ Universal type

Seal method: Sealant
For R, NPT thread

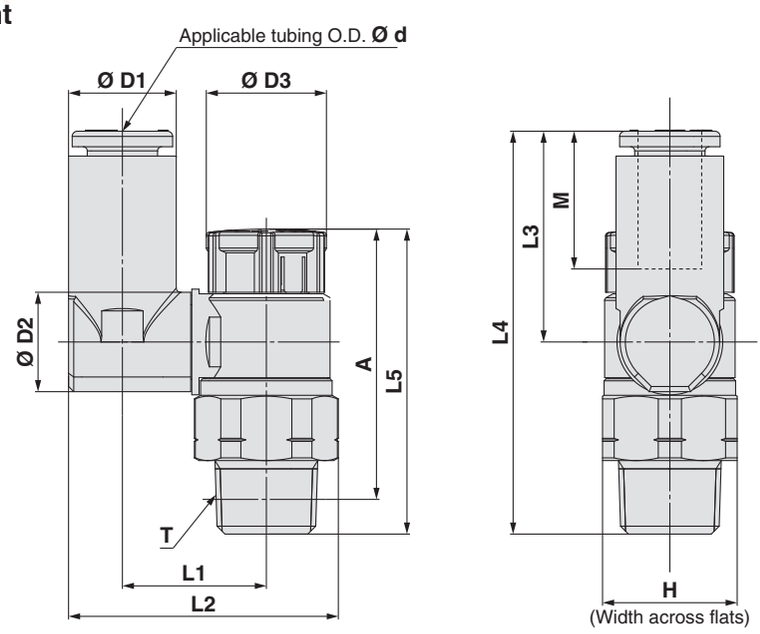

Metric Size

[mm]

Model	d	T	H	D1	D2	D3	L1	L2	L3	L4	L5 Note 1)		A Note 2)		M	Weight [g]
											Unlocked	Locked	Unlocked	Locked		
AS23□1FG-01-23(S)A	3.2	1/8	13 (12.7)	7.2	9.6	12	13.3	24	17.5	36	30.6	29.2	27.5	26.1	13.3	10 (9)
AS23□1FG-01-04(S)A	4			8.2			13.9	25.1								10 (10)
AS23□1FG-01-06(S)A	6			10.4				26.2	20.4	38.8						
AS23□1FG-01-08(S)A	8			13.2	10.2		16.4	30.1	21.5	40					14.2	12 (11)
AS23□1FG-02-04(S)A	4	1/4	17 (17.5)	8.2	12.9	13	16.5	29.9 (30)	17.5	40.1	36.6	35	31.1	29.5	13.3	18 (19)
AS23□1FG-02-06(S)A	6			11.2			19	33.8 (33.9)	21.4	43.9						20 (21)
AS23□1FG-02-08(S)A	8			13.2				34.9 (35)	23.5	46					14.2	21 (22)
AS23□1FG-02-10(S)A	10			15.9			20.9	38.1 (38.2)	24.7	47.3					15.6	23 (23)
AS33□1FG-02-06(S)A	6	1/4	19	11.2	12.9	16.6	20.2	36	21.4	57.8	50	48.4	44.5	42.9	13.3	42 (42)
AS33□1FG-02-08(S)A	8			13.2				37.1	23.5	59.9					14.2	43 (43)
AS33□1FG-02-10(S)A	10			15.9	17.4		23	41.2	26.1	62.5					15.6	46 (46)
AS33□1FG-02-12(S)A	12			18.5				42.5	28.3	64.7					17	48 (48)
AS33□1FG-03-06(S)A	6	3/8	19	11.2	12.9	16.6	20.2	36	21.4	50.1	42.3	40.7	37.1	35.5	13.3	32 (33)
AS33□1FG-03-08(S)A	8			13.2				37.1	23.5	52.2					14.2	33 (34)
AS33□1FG-03-10(S)A	10			15.9	17.4		23	41.2	26.1	54.8					15.6	37 (38)
AS33□1FG-03-12(S)A	12			18.5				42.5	28.3	57					17	38 (39)
AS43□1FG-04-10(S)A	10	1/2	24 (23.8)	15.9	17.4	18.8	25.6	46.4 (46.3)	26.1	61.2	50.8	49.2	43.7	42.1	15.6	58 (57)
AS43□1FG-04-12(S)A	12			18.5	21		26.2	48.3 (48.2)	28.3	63.4					17	62 (61)

Note 1) Reference dimensions Note 2) Reference dimensions of threads after installation Note 3) The values in ( ) are for NPT thread.

Inch Size

[mm]

Model	d	T	H	D1	D2	D3	L1	L2	L3	L4	L5 Note 1)		A Note 2)		M	Weight [g]
											Unlocked	Locked	Unlocked	Locked		
AS23□1FG-01-01(S)A	1/8"	1/8	13 (12.7)	7.2	9.6	12	13.3	24	17.5	36	30.6	29.2	27.5	26.1	13.3	10 (9)
AS23□1FG-01-03(S)A	5/32"			8.2			13.9	25.1								10 (10)
AS23□1FG-01-07(S)A	1/4"			11.2	10.2		16.4	29.1	20.2	38.7						11 (10)
AS23□1FG-01-09(S)A	5/16"			13.2				30.1	21.5	40					14.2	12 (11)
AS23□1FG-02-03(S)A	5/32"	1/4	17 (17.5)	8.2	12.9	13	16.5	29.9 (30)	17.5	40.1	36.6	35	31.1	29.5	13.3	18 (19)
AS23□1FG-02-07(S)A	1/4"			11.2			19	33.8 (33.9)	21.4	43.9						20 (21)
AS23□1FG-02-09(S)A	5/16"			13.2				34.9 (35)	23.5	46					14.2	21 (22)
AS23□1FG-02-11(S)A	3/8"			15.9			20.9	38.1 (38.2)	24.7	47.3					15.6	23 (23)
AS33□1FG-02-07(S)A	1/4"	3/8	19	11.2	12.9	16.6	20.2	36	21.4	57.8	50	48.4	44.5	42.9	13.3	42 (42)
AS33□1FG-02-09(S)A	5/16"			13.2				37.1	23.5	59.9					14.2	43 (43)
AS33□1FG-02-11(S)A	3/8"			15.9	17.4		23	41.2	26.1	62.5					15.6	46 (46)
AS33□1FG-03-07(S)A	1/4"	3/8	19	11.2	12.9	16.6	20.2	36	21.4	50.1	42.3	40.7	37.1	35.5	13.3	32 (33)
AS33□1FG-03-09(S)A	5/16"			13.2				37.1	23.5	52.2					14.2	33 (34)
AS33□1FG-03-11(S)A	3/8"			15.9	17.4		23	41.2	26.1	54.8					15.6	37 (38)
AS43□1FG-04-11(S)A	3/8"	1/2	24 (23.8)	15.9	17.4	18.8	25.6	46.4 (46.3)	26.1	61.2	50.8	49.2	43.7	42.1	15.6	58 (57)
AS43□1FG-04-13(S)A	1/2"			18.5	21		26.2	48.3 (48.2)	28.3	63.4					17	61 (60)

Note 1) Reference dimensions Note 2) Reference dimensions of threads after installation Note 3) The values in ( ) are for NPT thread.

chanhvinh.com

Series AS-FG

Dimensions/ Elbow type



Seal method: Face seal
For G thread

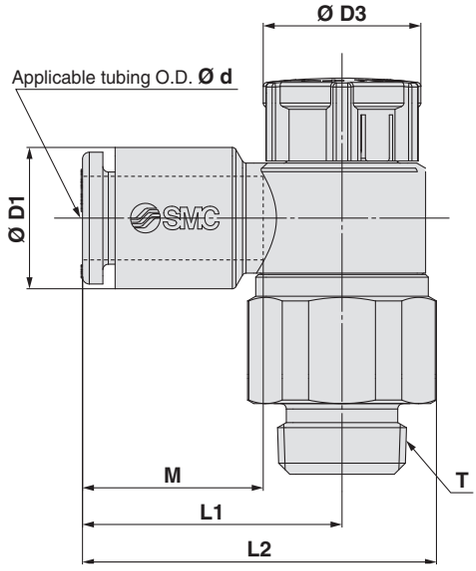

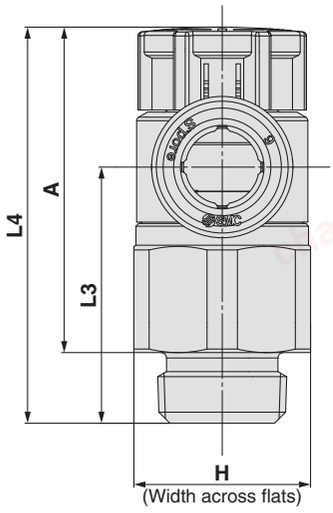

Metric Size

[mm]

Model	d	T	H	D1	D3	L1	L2	L3	L4		A		M	Weight [g]
									Unlocked	Locked	Unlocked	Locked		
AS22□1FG-G01-23A	3.2	1/8	13	7.2	12	19.1	26.2	18.8	30.3	28.9	24.8	23.4	13.3	10
AS22□1FG-G01-04A	4			8.2										
AS22□1FG-G01-06A	6			10.4										
AS22□1FG-G01-08A	8			13.2		22.4	29.5						14.2	11
AS22□1FG-G01-10A	10			15.9		25.3	32.4						15.6	12
AS22□1FG-G02-23A	3.2	1/4	17	7.2	13	20.9	30.2	22.6	36.6	35	30.1	28.5	13.3	20
AS22□1FG-G02-04A	4			8.2										
AS22□1FG-G02-06A	6			10.4		23.4	32.7							
AS22□1FG-G02-08A	8			13.2		23.9	33.2						14.2	21
AS22□1FG-G02-10A	10			15.9		26.9	36.2						15.6	22
AS32□1FG-G02-06A	6	1/4	21	10.4	16.6	21.8	33	36.4	50	48.4	43.5	41.9	13.3	50
AS32□1FG-G02-08A	8			13.2		22.7	33.9						14.2	
AS32□1FG-G02-10A	10			15.9		26.7	37.9	35.7					15.6	52
AS32□1FG-G02-12A	12			18.5		29.7	40.9	34.5					17	53
AS32□1FG-G03-06A	6	3/8	21	10.4	16.6	21.8	33	28.7	42.3	40.7	34.8	33.2	13.3	37
AS32□1FG-G03-08A	8			13.2		22.7	33.9						14.2	38
AS32□1FG-G03-10A	10			15.9		26.7	37.9	28					15.6	39
AS32□1FG-G03-12A	12			18.5		29.7	40.9	26.8					17	41
AS42□1FG-G04-10A	10	1/2	27	15.9	18.8	27.4	41.8	36.2	50.8	49.2	41.8	40.2	15.6	69
AS42□1FG-G04-12A	12			18.5		30.8	45.2	35.1					17	71
AS42□1FG-G04-16A	16			23.8		34.8	49.2	32.7					20.6	75

chanhvinh.com



Dimensions/ Universal type

Seal method: Face seal
For G thread

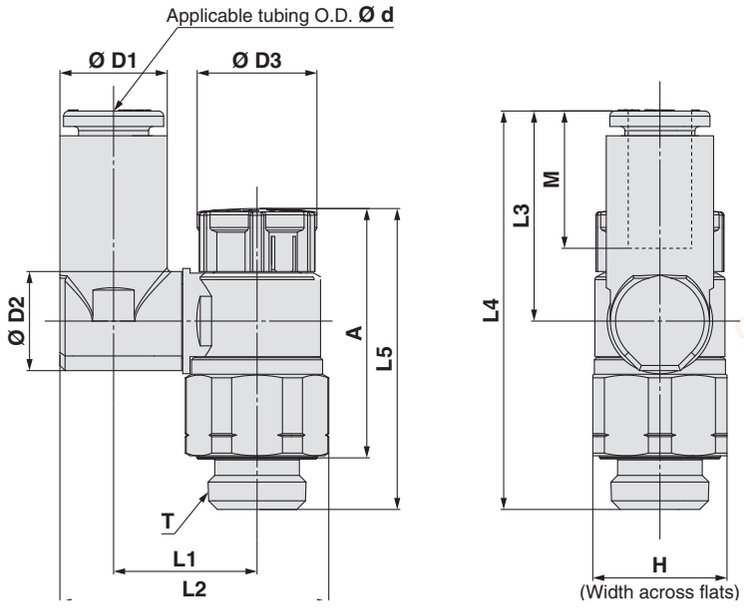

Metric Size

[mm]

Model	d	T	H	D1	D2	D3	L1	L2	L3	L4	L5		A		M	Weight [g]
											Unlocked	Locked	Unlocked	Locked		
AS23□1FG-G01-23A	3.2	1/8	13	7.2	9.6	12	13.3	24.0	17.5	35.7	30.3	28.9	24.8	23.4	13.3	10
AS23□1FG-G01-04A	4			8.2			13.9	25.1								10
AS23□1FG-G01-06A	6			10.4				26.2	20.4	38.5						11
AS23□1FG-G01-08A	8			13.2	10.2		16.4	30.1	21.5	39.7					14.2	12
AS23□1FG-G02-04A	4	1/4	17	8.2	12.9	13	16.5	29.9	17.5	40.1	36.6	35	30.1	28.5	13.3	21
AS23□1FG-G02-06A	6			10.4			19	33.8	21.4	43.9						23
AS23□1FG-G02-08A	8			13.2				34.9	23.5	46.0					14.2	24
AS23□1FG-G02-10A	10			15.9			20.9	38.1	24.7	47.3					15.6	25
AS33□1FG-G02-06A	6	1/4	21	10.4	12.9	16.6	20.2	36.6	21.4	57.8	50	48.4	43.5	41.9	13.3	51
AS33□1FG-G02-08A	8			13.2				38.0	23.5	59.9					14.2	52
AS33□1FG-G02-10A	10			15.9	17.4		23	42.2	26.1	58.0					15.6	55
AS33□1FG-G02-12A	12			18.5				43.5	28.3	59.9					17	57
AS33□1FG-G03-06A	6	3/8	21	10.4	12.9	16.6	20.2	36.6	21.4	50.1	42.3	40.7	34.8	33.2	13.3	40
AS33□1FG-G03-08A	8			13.2				38.0	23.5	52.2					14.2	41
AS33□1FG-G03-10A	10			15.9	17.4		23	42.2	26.1	50.3					15.6	44
AS33□1FG-G03-12A	12			18.5				43.5	28.3	52.2					17	46
AS43□1FG-G04-10A	10	1/2	27	15.9	17.4	18.8	25.6	47.9	26.1	61.2	50.8	49.2	41.8	40.2	15.6	75
AS43□1FG-G04-12A	12			18.5	21		26.2	49.8	28.3	63.4					17	79

chanhvinh.com

Series AS-FG
Made to Order

Please contact SMC for detailed dimensions, specifications and delivery.

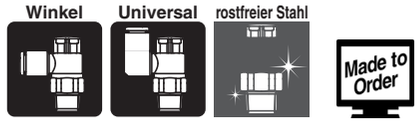

1 Lubricant: Vaseline -X12

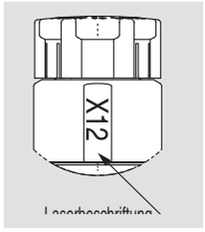

Example) AS2201FG-01-04SA-X12

2 Grease-free (Seal: Fluorine-coated) + Throttle Valve (Without Check Valve) -X21

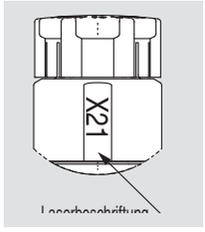

Example) AS2201FG-01-04SA-X21

Note 1) Not particle-free
Note 2) This product is a restrictor without a check valve (no control direction). Be aware that all part numbers are for a meter-out type; there is no part number for a meter-in type.

3 Throttle Valve (Without Check Valve) -X214

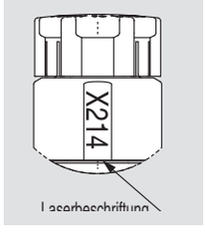

Example) AS2201FG-01-04SA-X214

Note) This product is a restrictor without a check valve (no control direction). Be aware that all part numbers are for a meter-out type; there is no part number for a meter-in type.

4 Clean Series 10-

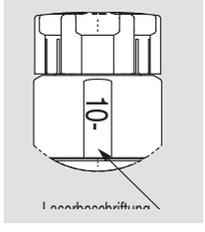

Example) 10-AS2201FG-01-04SA

Note 1) Fluorine grease is used.
Note 2) The particulate generation grade is 3.
Note 3) Excluding G thread type.

chanhvinh.com

Speed Controller with One-touch Fitting Elbow Type for M3

Series AS12□1F-M3-□A-X790

RoHS

Elbow



●Flow rate doubled

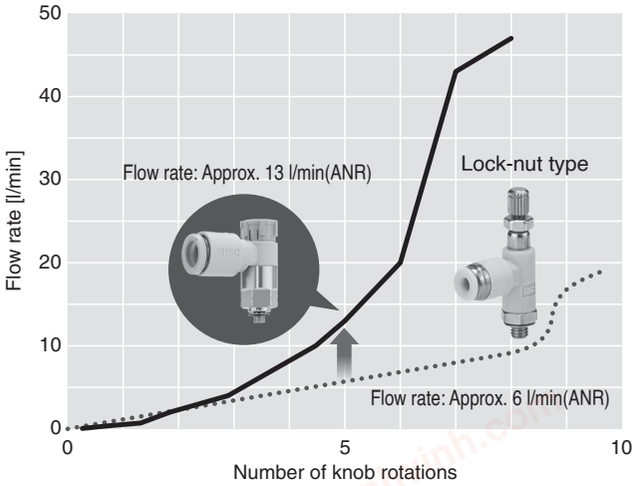

●Thread material: Stainless steel

Two of the applicable actuators

Compact Cylinder JCQ Series
Ø 12, Ø 16

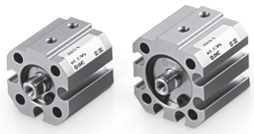

Compact Guide Cylinder JMGP Series
Ø 12, Ø 16



⚠Caution

The flow rate and overall length are different from those of the current lock-nut type speed controller. Please be careful when replacing the lock-nut type controllers.

Model

Model	Port size	Seal method	Applicable tubing O.D.					
			Metric size				Inch size	
			2*1	3.2	4	6	1/8"	5/32"
AS12□1F-M3-□A-X790	M3 x 0.5	Gasket seal	●	●	●	●	●	●

∗1: Only polyurethane tubing is applicable for Ø 2.

Flow Direction Symbols on Body

	Meter-out	Meter-in
Symbol	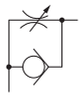	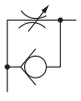

⚠Caution

Be sure to read this before handling products. For safety instructions and flow control equipment precautions, refer to the "Handling Precautions for SMC Products" and the "Operation Manual" on the SMC website: http://www.smc.eu

Specifications

Fluid	Air
Proof pressure	1.5 MPa
Max. operating pressure	1 MPa
Min. operating pressure	0.1 MPa
Ambient and fluid temperature	-5 to 60 °C (No freezing)
Applicable tubing material	Nylon, Soft nylon, Polyurethane*1, FEP, PFA

∗1: Use caution at the max. operating pressure when using soft nylon or polyurethane tubing. (Refer to the catalogue on **www.smc.eu**

Flow Rate and Sonic Conductance

Model		AS12□1F-M3-□
Tubing O.D.	Metric size	Ø 2, Ø 3.2 Ø 4, Ø 6
C values: Sonic conductance dm³/(s·bar)	Free flow	0.07
	Controlled flow	0.07
b values: Critical pressure ratio	Free flow	0.3
	Controlled flow	0.2

∗: C and b values are for controlled flow with the needle fully open and free flow with the needle fully closed.

chanhvinh.com

AS12□1F-M3-□A-X790

For M3



How to Order

Body size 1 **AS 1 2 0 1 F – M3 – 06 A – X790**

Body size

1	M3 x 0.5

Type

2	Elbow

Control type*1

0	Meter-out
1	Meter-in

*1: Meter-out and meter-in types can be visually identified by the colour of the knob.
Meter-out: Grey
Meter-in: Light blue

Port size

M3	M3 x 0.5

Push-lock type

Applicable tubing O.D.*1

Metric size		Inch size	
02	Ø 2	01	Ø 1/8"
23	Ø 3.2*2	03	Ø 5/32"
04	Ø 4		
06	Ø 6		

*1: For selecting applicable tubing O.D., refer to the model on the cover page.
Metric size and inch size types can be visually identified by the colour of the release button.
Metric size: Light grey
Inch size: Orange
*2: Use Ø 1/8" tubing.

Needle Valve/Flow Rate Characteristics

AS1201F-M3-□

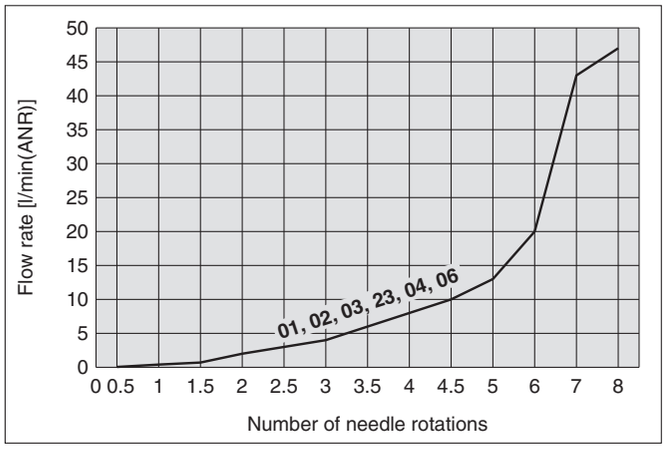

*: The numbers above the flow rate characteristic curves in the chart show the applicable tubing outside diameter as defined by the product number.

Construction

Seal method: Gasket seal
For M3

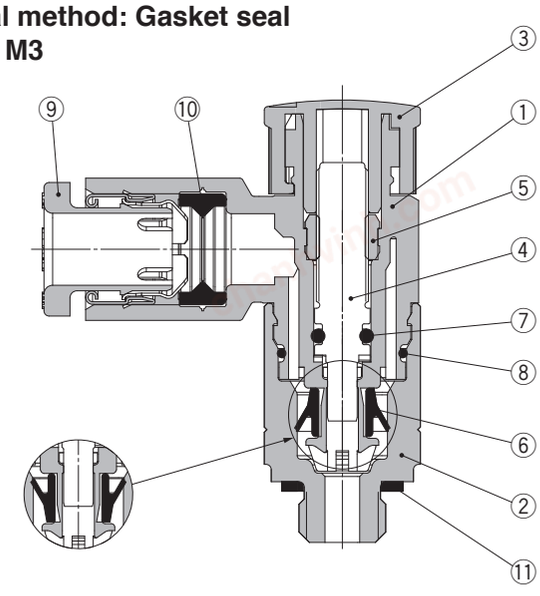

Meter-in type **Meter-out type**

Component Parts

No.	Description	Material	Note
1	**Body A**	PBT	
2	**Body B**	Stainless steel	
3	**Knob**	POM	
4	**Needle**	PBT	
5	**Needle guide**	Brass	Electroless nickel plating
6	**U-seal**	HNBR	
7	**O-ring**	NBR	
8	**O-ring**	NBR	
9	**Cassette**	—	
10	**Seal**	NBR	
11	**Gasket**	NBR/Stainless steel	IN-233-497-1

chanhvinh.com



Dimensions

Seal method: Gasket seal
For M3

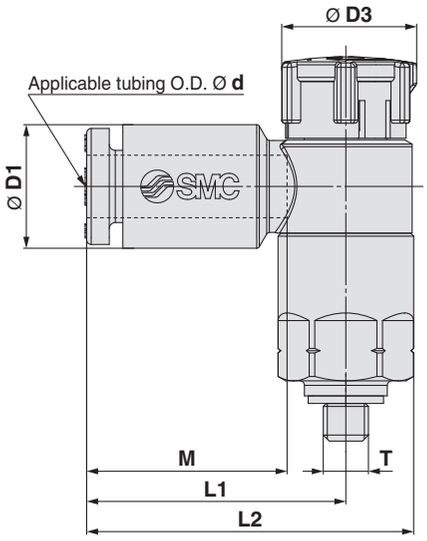

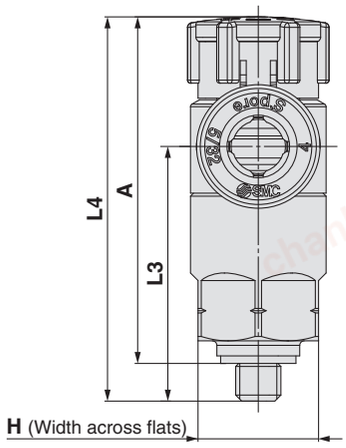

Metric Size/Inch Size

[mm]

Model	d	T	H	D1	D3	L1	L2	L3	L4*1		A*2		M	Weight [g]
									Unlocked	Locked	Unlocked	Locked		
AS12□1F-M3-02A-X790	2	M3 x 0.5	8	5.8	9.4	15.8	20.3	16.9	26.5	25.4	23.5	22.4	11.9	5
AS12□1F-M3-23A-X790	3.2			7.2		17.2	21.7						13.3	
AS12□1F-M3-04A-X790	4			8.2										
AS12□1F-M3-06A-X790	6			10.4		18.6	23.1	16.5						6
AS12□1F-M3-01A-X790	1/8"			7.2		17.2	21.7	16.9						5
AS12□1F-M3-03A-X790	5/32"			8.2										

∗1: Reference dimensions
∗2: Reference dimensions of threads after installation

chanhvinh.com

Speed Controller with One-touch Fitting

Face Seal

Elbow Type/Universal Type

Series AS

RoHS

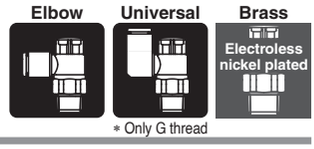

∗ Only G thread

Model

Model		Port size		Seal method	Applicable tubing O.D.												
					Metric size							Inch size					
Elbow type	Universal type				3.2	4	6	8	10	12	16	1/8"	5/32"	1/4"	5/16"	3/8"	1/2"
AS22□1F-G01	AS23□1F-G01	G	1/8	Face seal	●	●	●	●	● Note)								
AS22□1F-G02	AS23□1F-G02		1/4		● Note)	●	●	●	●								
AS32□1F-G02	AS33□1F-G02		1/4				●	●	●	●							
AS32□1F-G03	AS33□1F-G03		3/8				●	●	●	●							
AS42□1F-G04	AS43□1F-G04		1/2						●	●	● Note)						
AS22□1F-01-□PA	—	R NPT	1/8	Face seal	●	●	●	●	●			●	●	●	●		
AS22□1F-02-□PA	—		1/4		●	●	●	●	●			●	●	●	●	●	
AS32□1F-03-□PA	—		3/8				●	●	●	●				●	●	●	
AS42□1F-04-□PA	—		1/2						●	●						●	●

Note) Universal type is not available.

Flow Direction Symbols on Body

	Meter-out	Meter-in
Symbol		

Specifications

Fluid	Air
Proof pressure	1.5 MPa
Max. operating pressure	1 MPa
Min. operating pressure	0.1 MPa
Ambient and fluid temperature	−5 to 60 °C (No freezing)
Applicable tubing material	Nylon, Soft nylon, Polyurethane Note), FEP, PFA

Note) Use caution at the max. operating pressure when using soft nylon or polyurethane tubing. (Refer to the WEB catalogue for details.)

⚠ Caution

Be sure to read this before handling. Refer to the back cover for Safety Instructions. For Flow Control Equipment Precautions, refer to "Handling Precautions for SMC Products" and the Operation Manual.

Flow Rate and Sonic Conductance

Model		AS2□□1F-G01 AS22□1F-01-□PA			AS2□□1F-G02 AS22□1F-02-□PA				AS3□□1F-G02/03 AS32□1F-03-□PA			AS4□□1F-G04 AS42□1F-04-□PA	
Tubing O.D.	Metric size	Ø 3.2	Ø 4	Ø 6 Ø 8 Ø 10	Ø 3.2	Ø 4	Ø 6	Ø 8 Ø 10	Ø 6	Ø 8	Ø 10 Ø 12	Ø 10	Ø 12 Ø 16
	Note 2) Inch size	Ø 1/8"	Ø 5/32"	Ø 1/4" Ø 5/16"	Ø 1/8"	Ø 5/32"	—	Ø 1/4" Ø 5/16" Ø 3/8"	Ø 1/4"	Ø 5/16"	Ø 3/8"	Ø 3/8"	Ø 1/2"
C values: Sonic conductance dm³/(s·bar)	Free flow	0.4	0.6	0.6	0.7	1.0	1.3	1.5	1.6	1.7	2.5	4.4	4.8
	Controlled flow	0.4	0.7	0.8	0.6	0.9	1.3		2.1	2.4	3.3	4.4	4.9
b values: Critical pressure ratio	Free flow	0.2		0.3	0.3		0.4		0.4		0.3	0.3	
	Controlled flow	0.2		0.3	0.3				0.3			0.3	

Note 1) C and b values are for controlled flow with the needle fully open and free flow with the needle fully closed.
Note 2) G thread is not available.

chanhvinh.com

Elbow | Universal | Brass (Electroless nickel plated)

∗ Only G thread

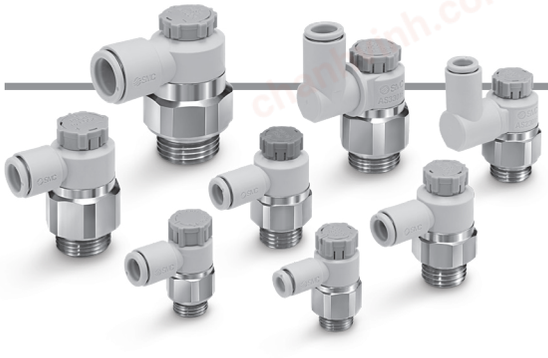

How to Order

G thread: AS 2 2 0 1 F – G 01 – 06 A –

R, NPT thread: AS 2 2 0 1 F – 01 – 06 P A –

Type

2	Elbow
3	Universal

Thread type

G	G

Body size

2	1/8, 1/4
3	3/8
4	1/2

Type

2	Elbow

Control type

0	Meter-out
1	Meter-in

Thread type

—	R
N	NPT

Port size

01	1/8
02	1/4
03	3/8
04	1/2

Made to Order
Refer to page 36 for details.

Push-lock type

Seal method

P	Face seal

Applicable tubing O.D. Note 1)

Metric size		Inch size Note 3)	
23	Ø 3.2 Note 2)	01	Ø 1/8"
04	Ø 4	03	Ø 5/32"
06	Ø 6	07	Ø 1/4"
08	Ø 8	09	Ø 5/16"
10	Ø 10	11	Ø 3/8"
12	Ø 12	13	Ø 1/2"
16	Ø 16 Note 4)		

Note 1) For selecting applicable tubing O.D., refer to the "Model" on page 29.
Note 2) Use Ø 1/8" tube.
Note 3) Only the metric size is available for the G thread type.
Note 4) Only G thread.

⚠ Caution

Cylinders with a level bearing surface are suitable for the R thread or NPT thread face seal type.
The R-shaped bearing surface of CG1 cylinders is not suitable.

Made to Order

Made to Order
(For details, refer to page 36.)

Symbol	Specifications
-X12	Lubricant: Vaseline
-X21	Grease-free (Seal: Fluorine-coated) + Restrictor (Without check valve)
-X214	Restrictor (Without check valve)
10-	Clean Series

chanhvinh.com

Needle Valve/Flow-rate Characteristics

AS2201F-G01-□, AS2211F-G01-□
AS2301F-G01-□, AS2311F-G01-□
AS2201F-01-□PA, AS2211F-01-□PA

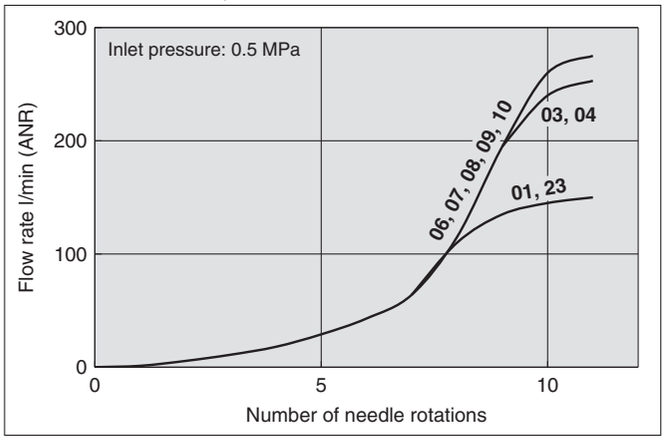

AS2201F-G02-□, AS2211F-G02-□
AS2301F-G02-□, AS2311F-G02-□
AS2201F-02-□PA, AS2211F-02-□PA

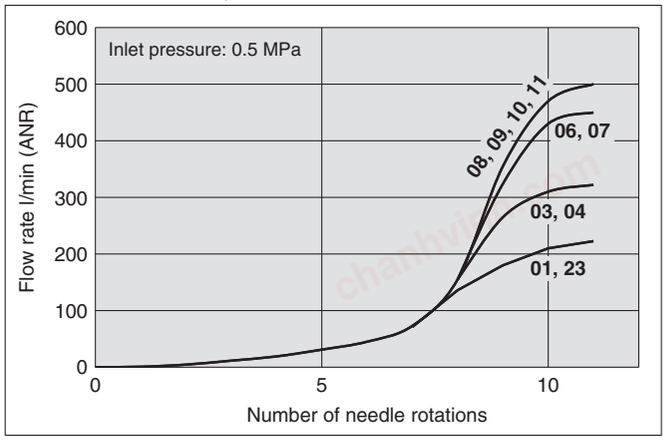

AS3201F-G02/03-□, AS3211F-G02/03-□
AS3301F-G02/03-□, AS3311F-G02/03-□
AS3201F-03-□PA, AS3211F-03-□PA

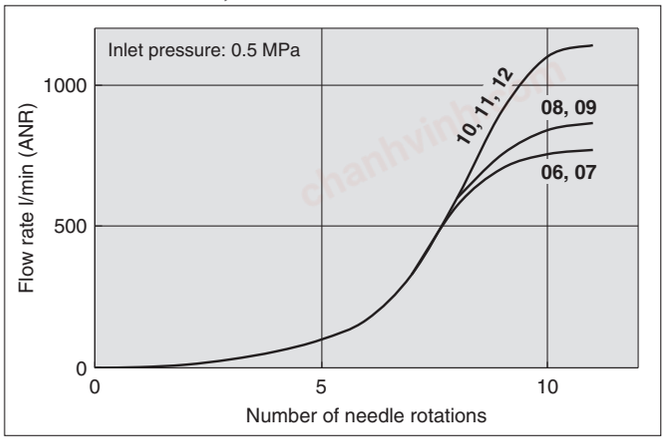

AS4201F-G04-□, AS4211F-G04-□
AS4301F-G04-□, AS4311F-G04-□
AS4201F-04-□PA, AS4211F-04-□PA

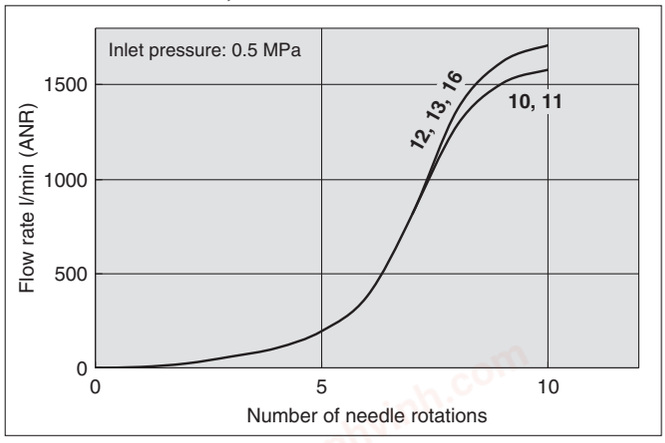

Note) The numbers above the flow-rate characteristic curves in the charts show the applicable tubing outside diameter as defined by the product number.

chanhvinh.com

Construction

Elbow type

Seal method: Face seal
For G, R, NPT thread

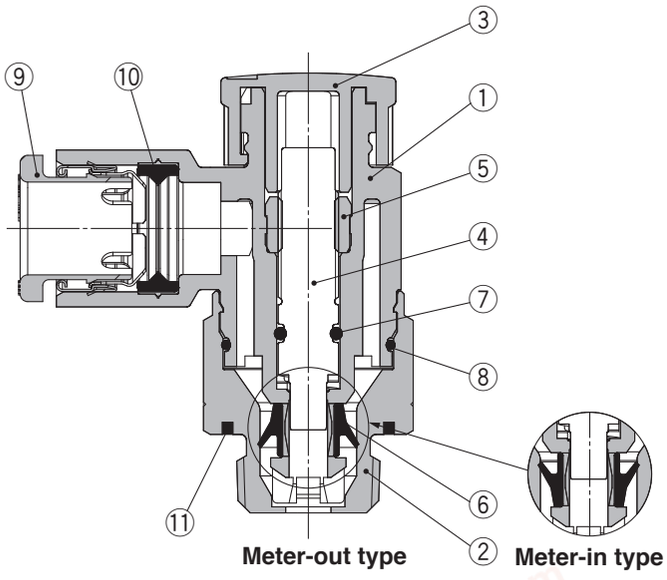

Component Parts

No.	Description	Material	Note
1	**Body A**	PBT	
2	**Body B**	Brass	Electroless nickel plating
3	**Knob**	POM	
4	**Needle**	PBT	
5	**Needle guide**	Brass	Electroless nickel plating
6	**U-seal**	HNBR	
7	**O-ring**	NBR	
8	**O-ring**	NBR	
9	**Cassette**	—	
10	**Seal**	NBR	
11	**Seal**	NBR	

Universal type

Seal method: Face seal
For G thread

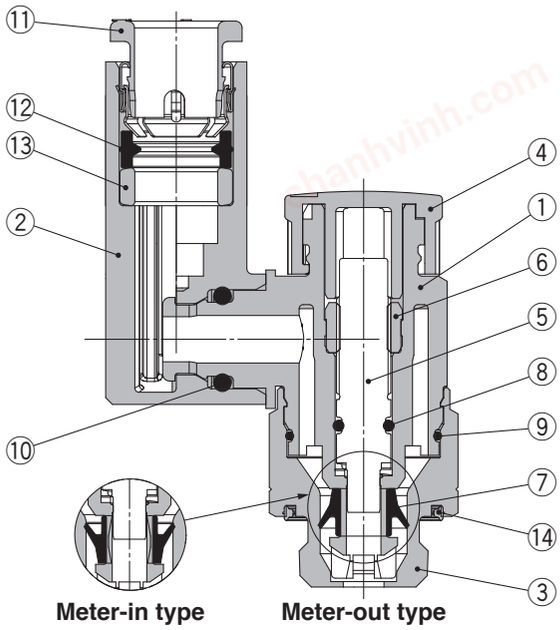

Component Parts

No.	Description	Material	Note
1	**Body A**	PBT	
2	**Elbow body**	PBT	
3	**Body B**	Stainless steel	
4	**Knob**	POM	
5	**Needle**	PBT	
6	**Needle guide**	Stainless steel	
7	**U-seal**	HNBR	
8	**O-ring**	NBR	
9	**O-ring**	NBR	
10	**O-ring**	NBR	
11	**Cassette**	—	
12	**Seal**	NBR	
13	**Spacer**	PBT Note)	
14	**Seal**	NBR	

Note) Spacer is included only for the applicable tubing O.D. Ø 3.2, Ø 1/8", Ø 4, Ø 5/32" and Ø 6.

chanhvinh.com

Dimensions/ Elbow type



Seal method: Face seal
For G thread

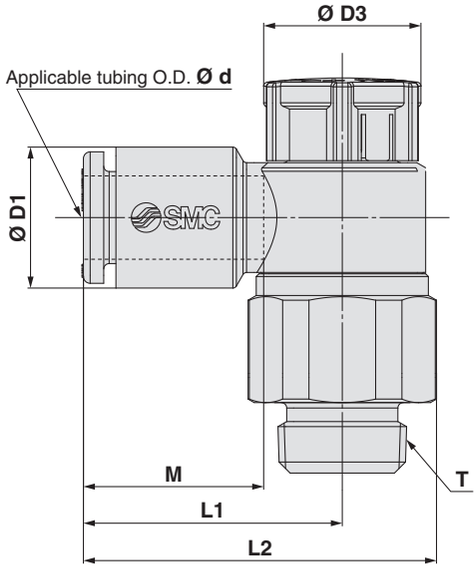

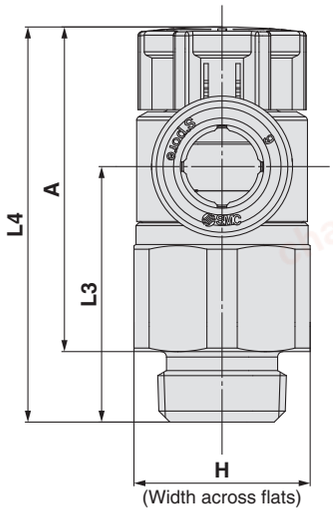

Metric Size

[mm]

Model	d	T	H	D1	D3	L1	L2	L3	L4		A		M	Weight [g]
									Unlocked	Locked	Unlocked	Locked		
AS22□1F-G01-23A	3.2	1/8	13	7.2	12	19.1	26.2	18.8	30.3	28.9	24.8	23.4	13.3	10
AS22□1F-G01-04A	4			8.2										
AS22□1F-G01-06A	6			10.4										
AS22□1F-G01-08A	8			13.2		22.4	29.5						14.2	11
AS22□1F-G01-10A	10			15.9		25.3	32.4						15.6	12
AS22□1F-G02-23A	3.2	1/4	17	7.2	13	20.9	30.2	22.6	36.6	35	30.1	28.5	13.3	21
AS22□1F-G02-04A	4			8.2										
AS22□1F-G02-06A	6			10.4		23.4	32.7							
AS22□1F-G02-08A	8			13.2		23.9	33.2						14.2	22
AS22□1F-G02-10A	10			15.9		26.9	36.2						15.6	23
AS32□1F-G02-06A	6	1/4	21	10.4	16.6	21.8	33	36.4	50	48.4	43.5	41.9	13.3	50
AS32□1F-G02-08A	8			13.2		22.7	33.9						14.2	
AS32□1F-G02-10A	10			15.9		26.7	37.9	35.7					15.6	52
AS32□1F-G02-12A	12			18.5		29.7	40.9	34.5					17	53
AS32□1F-G03-06A	6	3/8	21	10.4	16.6	21.8	33	28.7	42.3	40.7	34.8	33.2	13.3	38
AS32□1F-G03-08A	8			13.2		22.7	33.9						14.2	39
AS32□1F-G03-10A	10			15.9		26.7	37.9	28					15.6	40
AS32□1F-G03-12A	12			18.5		29.7	40.9	26.8					17	42
AS42□1F-G04-10A	10	1/2	27	15.9	18.8	27.4	41.8	36.2	50.8	49.2	41.8	40.2	15.6	72
AS42□1F-G04-12A	12			18.5		30.8	45.2	35.1					17	74
AS42□1F-G04-16A	16			23.8		34.8	49.2	32.7					20.6	78

chanhvinh.com



Dimensions/ Universal type

Seal method: Face seal
For G thread

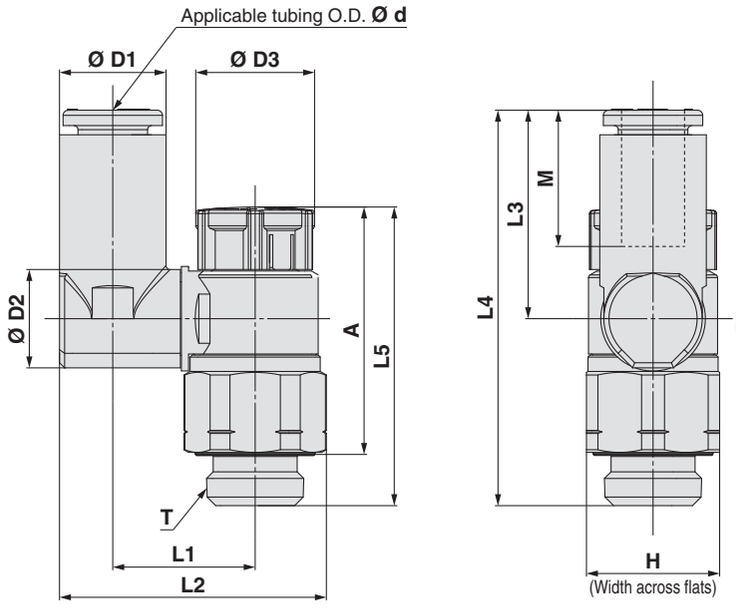

Metric Size

[mm]

Model	d	T	H	D1	D2	D3	L1	L2	L3	L4	L5		A		M	Weight [g]
											Unlocked	Locked	Unlocked	Locked		
AS23□1F-G01-23A	3.2	1/8	13	7.2	9.6	12	13.3	24.0	17.5	35.7	30.3	28.9	24.8	23.4	13.3	10
AS23□1F-G01-04A	4			8.2			13.9	25.1								11
AS23□1F-G01-06A	6			10.4				26.2	20.4	38.5						11
AS23□1F-G01-08A	8			13.2	10.2		16.4	30.1	21.5	39.7					14.2	12
AS23□1F-G02-04A	4	1/4	17	8.2	12.9	13	16.5	29.9	17.5	40.1	36.6	35	30.1	28.5	13.3	22
AS23□1F-G02-06A	6			10.4			19	33.8	21.4	43.9						24
AS23□1F-G02-08A	8			13.2				34.9	23.5	46.0					14.2	25
AS23□1F-G02-10A	10			15.9			20.9	38.1	24.7	47.3					15.6	26
AS33□1F-G02-06A	6	1/4	21	10.4	12.9	16.6	20.2	36.6	21.4	57.8	50	48.4	43.5	41.9	13.3	51
AS33□1F-G02-08A	8			13.2				38.0	23.5	59.9					14.2	52
AS33□1F-G02-10A	10			15.9	17.4		23	42.2	26.1	58.0					15.6	55
AS33□1F-G02-12A	12			18.5				43.5	28.3	59.9					17	57
AS33□1F-G03-06A	6	3/8	21	10.4	12.9	16.6	20.2	36.6	21.4	50.1	42.3	40.7	34.8	33.2	13.3	41
AS33□1F-G03-08A	8			13.2				38.0	23.5	52.2					14.2	42
AS33□1F-G03-10A	10			15.9	17.4		23	42.2	26.1	50.3					15.6	46
AS33□1F-G03-12A	12			18.5				43.5	28.3	52.2					17	47
AS43□1F-G04-10A	10	1/2	27	15.9	17.4	18.8	25.6	47.9	26.1	61.2	50.8	49.2	41.8	40.2	15.6	78
AS43□1F-G04-12A	12			18.5	21		26.2	49.8	28.3	63.4					17	82

chanhvinh.com

Dimensions/ Elbow type



Seal method: Face seal
For R, NPT thread

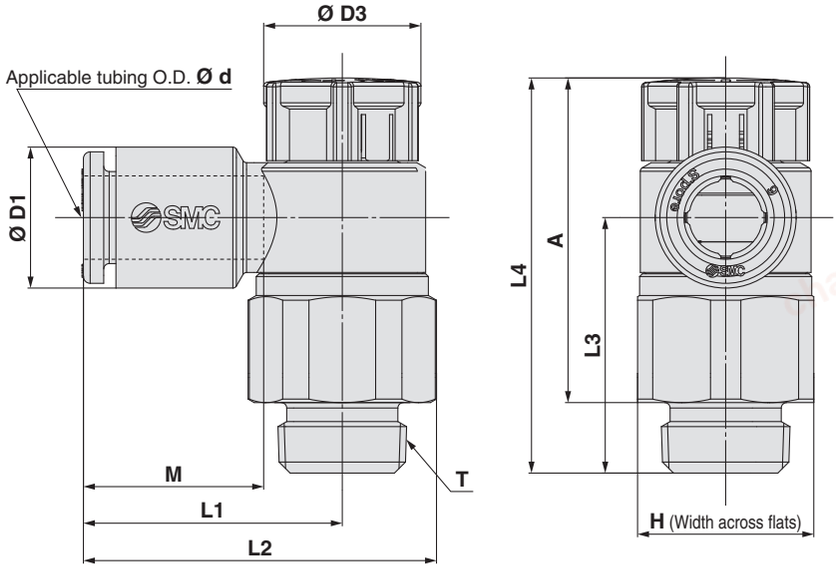

Metric Size

[mm]

Model	d	T	H	D1	D3	L1	L2	L3	L4		A		M	Weight [g]
									Unlocked	Locked	Unlocked	Locked		
AS22□1F-01-23PA	3.2	1/8	13 (12.7)	7.2	12	19.1	26.2	18.8	30.3	28.9	25.1 (24.9)	23.7 (23.5)	13.3	10 (9)
AS22□1F-01-04PA	4			8.2										
AS22□1F-01-06PA	6			10.4										
AS22□1F-01-08PA	8			13.2		22.4	29.5						14.2	11 (10)
AS22□1F-01-10PA	10			15.9		25.3	32.4						15.6	12 (11)
AS22□1F-02-23PA	3.2	1/4	17 (17.5)	7.2	13	20.9	30.2 (30.3)	22.6	36.6	35	29 (28.5)	27.4 (26.9)	13.3	19 (19)
AS22□1F-02-04PA	4			8.2										19 (20)
AS22□1F-02-06PA	6			10.4		23.4	32.7 (32.8)							20 (20)
AS22□1F-02-08PA	8			13.2		23.9	33.2 (33.3)						14.2	20 (21)
AS22□1F-02-10PA	10			15.9		26.9	36.2 (36.3)						15.6	21 (22)
AS32□1F-03-06PA	6	3/8	21 (21.7)	10.4	16.6	21.8	33 (33.4)	28.7	42.3	40.7	34.7 (34.2)	33.1 (32.6)	13.3	37 (39)
AS32□1F-03-08PA	8			13.2		22.7	33.9 (34.3)						14.2	38 (40)
AS32□1F-03-10PA	10			15.9		26.7	37.9 (38.3)	28					15.6	39 (41)
AS32□1F-03-12PA	12			18.5		29.7	40.9 (41.3)	26.8					17	41 (42)
AS42□1F-04-10PA	10	1/2	27 (28.6)	15.9	18.8	27.4	41.8 (42.6)	36.2	50.8	49.2	40.4	38.8	15.6	66 (72)
AS42□1F-04-12PA	12			18.5		30.8	45.2 (46)	35.1					17	68 (74)

Note) The values in ( ) are for NPT thread.

Inch Size

[mm]

Model	d	T	H	D1	D3	L1	L2	L3	L4		A		M	Weight [g]
									Unlocked	Locked	Unlocked	Locked		
AS22□1F-01-01PA	1/8"	1/8	13 (12.7)	7.2	12	19.1	26.2	18.8	30.3	28.9	25.1 (24.9)	23.7 (23.5)	13.3	10 (9)
AS22□1F-01-03PA	5/32"			8.2										
AS22□1F-01-07PA	1/4"			11.2		20.8	27.9							10 (10)
AS22□1F-01-09PA	5/16"			13.2		22.4	29.5						14.2	11 (10)
AS22□1F-02-01PA	1/8"	1/4	17 (17.5)	7.2	13	20.9	30.2 (30.3)	22.6	36.6	35	29 (28.5)	27.4 (26.9)	13.3	19 (19)
AS22□1F-02-03PA	5/32"			8.2										19 (20)
AS22□1F-02-07PA	1/4"			11.2		23.4	32.7 (32.8)							20 (20)
AS22□1F-02-09PA	5/16"			13.2		23.9	33.2 (33.3)						14.2	20 (21)
AS22□1F-02-11PA	3/8"			15.5		26.4	35.7 (35.8)						15.6	21 (22)
AS32□1F-03-07PA	1/4"	3/8	21 (21.7)	11.2	16.6	21.8	33 (33.4)	28.7	42.3	40.7	34.7 (34.2)	33.1 (32.6)	13.3	38 (39)
AS32□1F-03-09PA	5/16"			13.2		22.7	33.9 (34.3)						14.2	38 (40)
AS32□1F-03-11PA	3/8"			15.5		26.7	37.9 (38.3)	28.2					15.6	39 (40)
AS42□1F-04-11PA	3/8"	1/2	27 (28.6)	15.5	18.8	27.4	41.8 (42.6)	36.2	50.8	49.2	40.4	38.8	15.6	66 (72)
AS42□1F-04-13PA	1/2"			19.3		30.9	45.3 (46.1)	34.7					17	68 (74)

Note) The values in ( ) are for NPT thread.

chanhvinh.com

Series AS
Made to Order

Please contact SMC for detailed dimensions, specifications and delivery.

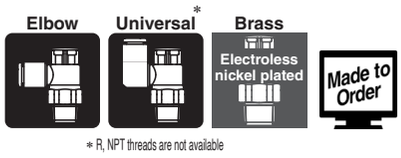

* R, NPT threads are not available

1 Lubricant: Vaseline -X12

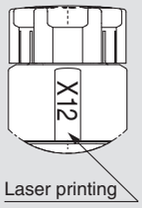

Example) AS2201F-G01-04A-X12

2 Grease-free (Seal: Fluorine-coated) + Restrictor (Without check valve) -X21

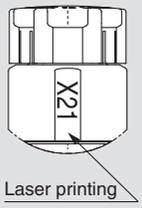

Example) AS2201F-G01-04A-X21

Note 1) Not particle-free
Note 2) This product is a restrictor without a check valve (no control direction). Be aware that all part numbers are for a meter-out type; there is no part number for a meter-in type.
Note 3) Only the needle and O-ring are fluorine-coated.

3 Restrictor (Without check valve) -X214

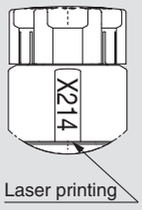

Example) AS2201F-G01-04A-X214

Note) This product is a restrictor without a check valve (no control direction). Be aware that all part numbers are for a meter-out type; there is no part number for a meter-in type.

4 Clean Series 10-

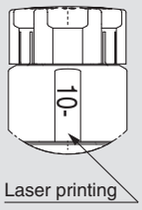

Example) 10-AS2201F-G01-04A

Note 1) Fluorine grease is used.
Note 2) The cleanliness class (ISO class) is 5.
Note 3) Excluding G thread type.

chanhvinh.com

Speed Controller with Uni One-touch Fitting

Series AS

Elbow | Universal | Brass, Electroless nickel plated



New-stand male threads for piping that reduces the screw-in time by 1/3.



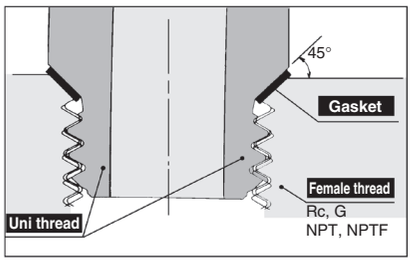

Shape of Uni thread ridge

Use of the chamfered surface of the female thread as the seat surface and adoption of gaskets made by laminating NBR on both surfaces of stainless steel plates achieve secure sealing regardless of the difference of diameters due to the female thread type, deviations due to the tolerance, or the size of the chamfered corner. (Any standard chamfered female thread can be used.)

A ridge shape has been created as a Uni thread for common applications for Rc, G, NPT and NPTF.

The gasket seal method drastically cuts piping work-hours.

Flow Direction Symbols on Body

	Meter-out	Meter-in
Symbol	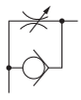	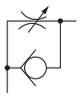

⚠ Caution

Be sure to read this before handling. Refer to the back cover for Safety Instructions. For Flow Control Equipment Precautions, refer to "Handling Precautions for SMC Products" and the Operation Manual.

Model

Model		Uni thread size	Applicable tubing O.D.												
			Metric size							Inch size					
Elbow type	Universal type		3.2	4	6	8	10	12	16	1/8"	5/32"	1/4"	5/16"	3/8"	1/2"
AS22□1F-U01	AS23□1F-U01	1/8	●	●	●	●	●Note)			●	●	●	●		
AS22□1F-U02	AS23□1F-U02	1/4	●Note)	●	●	●	●			●Note)	●	●	●	●	
AS32□1F-U02	AS33□1F-U02	1/4			●	●	●	●				●	●	●	
AS32□1F-U03	AS33□1F-U03	3/8			●	●	●	●				●	●	●	
AS42□1F-U04	AS43□1F-U04	1/2					●	●	●Note)					●	●

Note) Universal type is not available.

Specifications

Fluid	Air
Proof pressure	1.5 MPa
Max. operating pressure	1 MPa
Min. operating pressure	0.1 MPa
Ambient and fluid temperature	–5 to 60 °C (No freezing)
Applicable tubing material	Nylon, Soft nylon, Polyurethane Note)

Note) Use caution at the max. operating pressure when using soft nylon or polyurethane tubing. (Refer to the WEB catalogue for details.)

Flow Rate and Sonic Conductance

Model		AS22□1F-U01 AS23□1F-U01			AS22□1F-U02 AS23□1F-U02				AS32□1F AS33□1F			AS42□1F AS43□1F	
Tubing O.D.	Metric size	Ø 3.2	Ø 4	Ø 6 Ø 8 Ø 10	Ø 3.2	Ø 4	Ø 6	Ø 8 Ø 10	Ø 6	Ø 8	Ø 10 Ø 12	Ø 10	Ø 12 Ø 16
	Inch size	Ø 1/8"	Ø 5/32"	Ø 1/4" Ø 5/16"	Ø 1/8"	Ø 5/32"	—	Ø 1/4" Ø 5/16" Ø 3/8"	Ø 1/4"	Ø 5/16"	Ø 3/8"	Ø 3/8"	Ø 1/2"
C values: Sonic conductance $dm^3/(s \cdot bar)$	Free flow	0.4	0.6	0.6	0.7	1.0	1.3	1.5	1.6	1.7	2.5	4.4	4.8
	Controlled flow	0.4	0.7	0.8	0.6	0.9	1.3		2.1	2.4	3.3	4.4	4.9
b values: Critical pressure ratio	Free flow	0.2		0.3	0.3		0.4		0.4		0.3	0.3	
	Controlled flow	0.2		0.3	0.3				0.3			0.3	

Note) C and b values are for controlled flow with the needle fully open and free flow with the needle fully closed.

chanhvinh.com

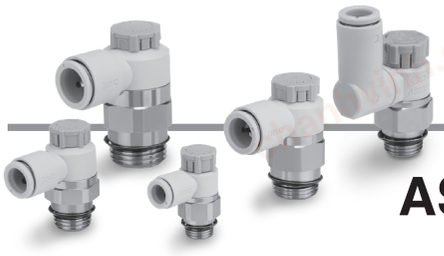

Elbow | Universal | Brass — Electroless nickel plated

How to Order

AS 2 2 0 1 F – U01 – 06 A

Body size

2	1/8, 1/4
3	3/8
4	1/2

Type

2	Elbow
3	Universal

Control type

0	Meter-out
1	Meter-in

* Meter-out and meter-in types can be visually identified by colour of the knob.
Meter-out: Grey
Meter-in: Light blue

With One-touch fitting

Port size

U01	Uni 1/8
U02	Uni 1/4
U03	Uni 3/8
U04	Uni 1/2

Push-lock type

Applicable tubing O.D. Note 1)

Metric size

Tubing O.D.	
23	Ø 3.2 Note 2)
04	Ø 4
06	Ø 6
08	Ø 8
10	Ø 10
12	Ø 12
16	Ø 16

Inch size

Tubing O.D.	
01	Ø 1/8"
03	Ø 5/32"
07	Ø 1/4"
09	Ø 5/16"
11	Ø 3/8"
13	Ø 1/2"

Note 1) For selecting applicable tubing O.D., refer to the "Model" on page 37. Metric size and inch size types can be visually identified by colour of the release button.
Metric size: Light grey
Inch size: Orange
Note 2) Use Ø 1/8" tube.

Needle Valve/Flow-rate Characteristics

AS2201F-U01, AS2211F-U01
AS2301F-U01, AS2311F-U01

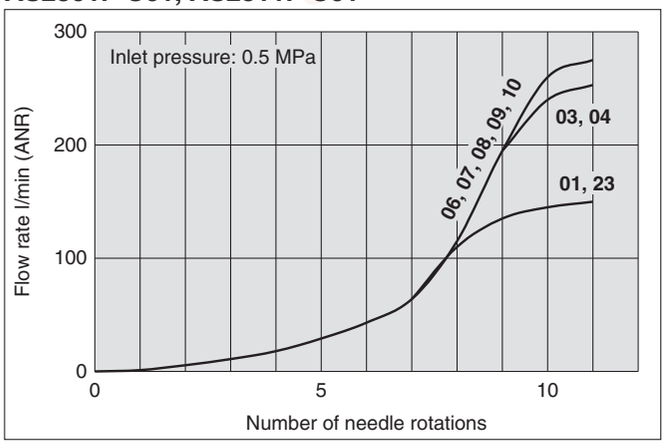

AS2201F-U02, AS2211F-U02
AS2301F-U02, AS2311F-U02

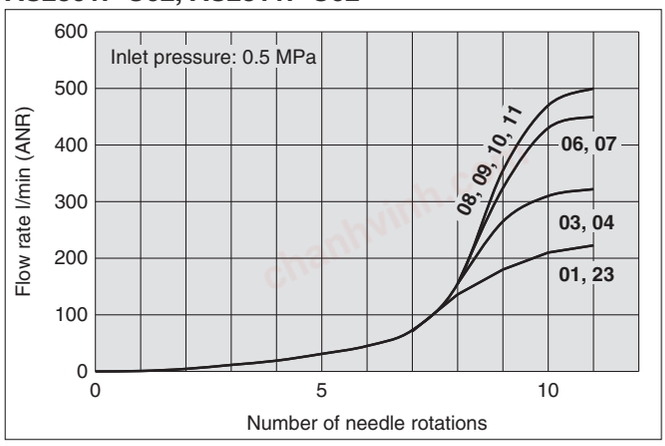

AS3201F, AS3211F
AS3301F, AS3311F

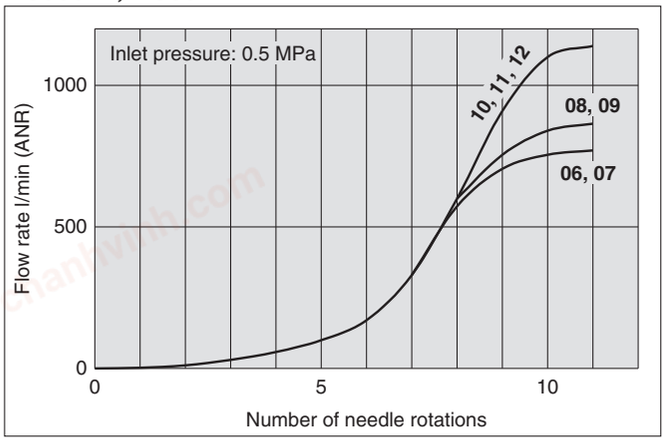

AS4201F, AS4211F
AS4301F, AS4311F

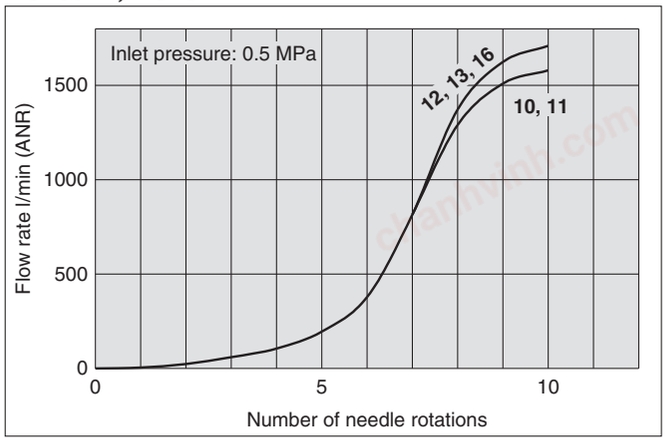

Note) The numbers above the flow-rate characteristic curves in the charts show the applicable tubing outside diameter as defined by the product number.

chanhvinh.com

Construction

Elbow type

Seal method: Gasket seal
For Uni thread

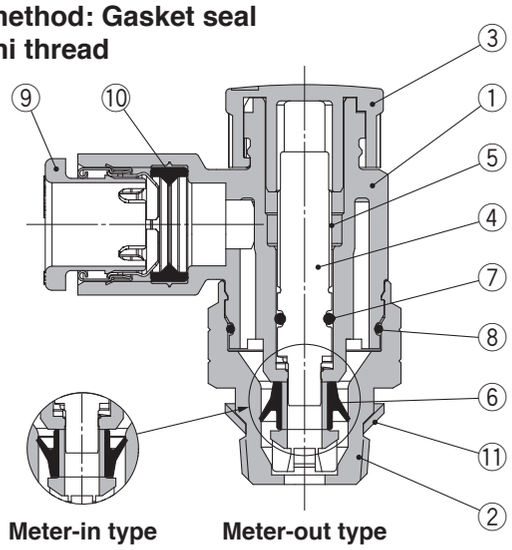

Meter-in type Meter-out type

Component Parts

No.	Description	Material	Note
1	**Body A**	PBT	
2	**Body B**	Brass	Electroless nickel plating
3	**Knob**	POM	
4	**Needle**	PBT	
5	**Needle guide**	Brass	Electroless nickel plating
6	**U-seal**	HNBR	
7	**O-ring**	NBR	
8	**O-ring**	NBR	
9	**Cassette**	—	
10	**Seal**	NBR	
11	**Gasket**	NBR/Stainless steel	

Universal type

Seal method: Gasket seal
For Uni thread

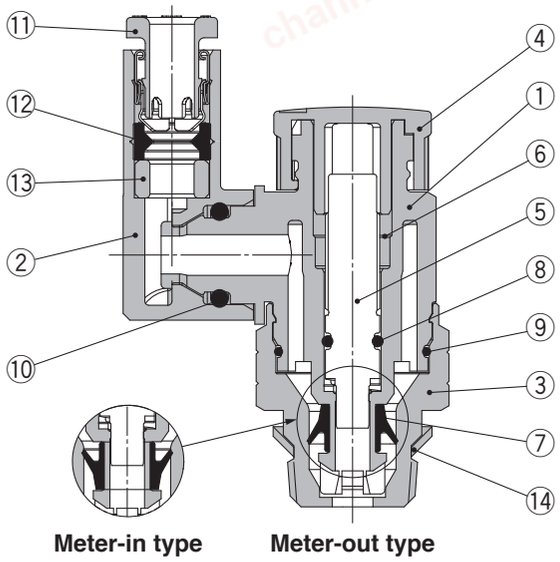

Meter-in type Meter-out type

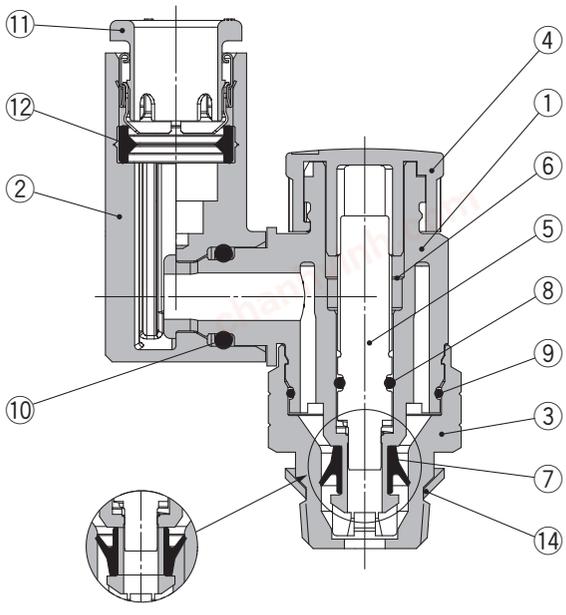

Meter-in type Meter-out type

Component Parts

No.	Description	Material	Note
1	**Body A**	PBT	
2	**Elbow body**	PBT	
3	**Body B**	Brass	Electroless nickel plating
4	**Knob**	POM	
5	**Needle**	PBT	
6	**Needle guide**	Brass	Electroless nickel plating
7	**U-seal**	HNBR	
8	**O-ring**	NBR	
9	**O-ring**	NBR	
10	**O-ring**	NBR	
11	**Cassette**	—	
12	**Seal**	NBR	
13	**Spacer** Note)	—	
14	**Gasket**	NBR/Stainless steel	

Note) Used only for the AS22□1F-U01-23A.

chanhvinh.com

Dimensions/ Elbow type



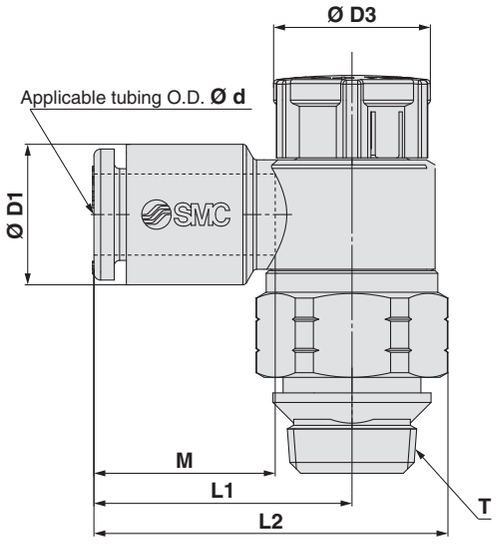

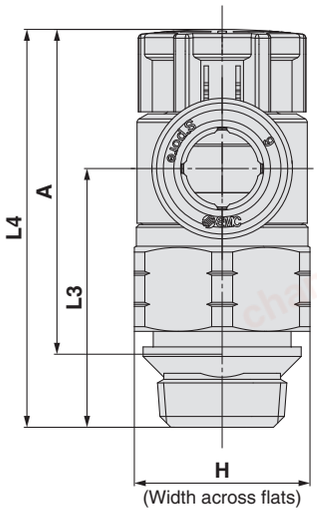

Metric Size

[mm]

Model	d	T Uni thread	H	D1	D3	L1	L2	L3	L4 Note1) Unlocked	L4 Note1) Locked	A Note 2) Unlocked	A Note 2) Locked	M	Weight [g]
AS22□1F-U01-23A	3.2	1/8	13	7.2	12	19.1	26.2	19.1	30.6	29.2	25.8	24.4	13.3	9
AS22□1F-U01-04A	4			8.2										
AS22□1F-U01-06A	6			10.4										10
AS22□1F-U01-08A	8			13.2		22.4	29.5						14.2	11
AS22□1F-U01-10A	10			15.9		25.3	32.4						15.6	12
AS22□1F-U02-23A	3.2	1/4	17	7.2	13	20.9	30.2	22.6	36.6	35	30.2	28.6	13.3	17
AS22□1F-U02-04A	4			8.2										
AS22□1F-U02-06A	6			10.4		23.4	32.7							
AS22□1F-U02-08A	8			13.2		23.9	33.2						14.2	18
AS22□1F-U02-10A	10			15.9		26.9	36.2						15.6	19
AS32□1F-U02-06A	6	1/4	19	10.4	16.6	21.8	32.1	36.4	50	48.4	43.6	42	13.3	39
AS32□1F-U02-08A	8			13.2		22.7	33						14.2	
AS32□1F-U02-10A	10			15.9		26.7	37	35.7					15.6	40
AS32□1F-U02-12A	12			18.5		29.7	40	34.5					17	42
AS32□1F-U03-06A	6	3/8	19	10.4	16.6	21.8	32.1	28.7	42.3	40.7	35.9	34.3	13.3	39
AS32□1F-U03-08A	8			13.2		22.7	33						14.2	
AS32□1F-U03-10A	10			15.9		26.7	37	28					15.6	40
AS32□1F-U03-12A	12			18.5		29.7	40	26.8					17	42
AS42□1F-U04-10A	10	1/2	24	15.9	18.8	27.4	40.3	36.2	50.8	49.2	42.2	40.6	15.6	52
AS42□1F-U04-12A	12			18.5		30.8	43.7	35.1					17	54
AS42□1F-U04-16A	16			23.8		34.8	47.7	32.7					20.6	58

Note 1) Reference dimensions Note 2) Reference dimensions of threads after installation

Inch Size

[mm]

Model	d	T Uni thread	H	D1	D3	L1	L2	L3	L4 Note1) Unlocked	L4 Note1) Locked	A Note 2) Unlocked	A Note 2) Locked	M	Weight [g]
AS22□1F-U01-01A	1/8"	1/8	13	7.2	12	19.1	26.2	19.1	30.6	29.2	25.8	24.4	13.3	9
AS22□1F-U01-03A	5/32"			8.2										
AS22□1F-U01-07A	1/4"			11.2		20.8	27.9							10
AS22□1F-U01-09A	5/16"			13.2		22.4	29.5						14.2	11
AS22□1F-U02-01A	1/8"	1/4	17	7.2	13	20.9	30.2	22.6	36.6	35	30.2	28.6	13.3	17
AS22□1F-U02-03A	5/32"			8.2										
AS22□1F-U02-07A	1/4"			11.2		23.4	32.7							18
AS22□1F-U02-09A	5/16"			13.2		23.9	33.2						14.2	
AS22□1F-U02-11A	3/8"			15.5		26.4	35.7						15.6	19
AS32□1F-U02-07A	1/4"	1/4	19	11.2	16.6	21.8	32.1	36.4	50	48.4	43.6	42	13.3	39
AS32□1F-U02-09A	5/16"			13.2		22.7	33						14.2	
AS32□1F-U02-11A	3/8"			15.5		26.7	37	35.9					15.6	40
AS32□1F-U03-07A	1/4"	3/8	19	11.2	16.6	21.8	32.1	28.7	42.3	40.7	35.9	34.3	13.3	39
AS32□1F-U03-09A	5/16"			13.2		22.7	33						14.2	
AS32□1F-U03-11A	3/8"			15.5		26.7	37	28.2					15.6	40
AS42□1F-U04-11A	3/8"	1/2	24	15.5	18.8	27.4	40.3	36.2	50.8	49.2	42.2	40.6	15.6	52
AS42□1F-U04-13A	1/2"			19.3		30.9	43.8	34.7					17	54

Note 1) Reference dimensions Note 2) Reference dimensions of threads after installation

chanhvinh.com

Series AS

Dimensions/ Universal type



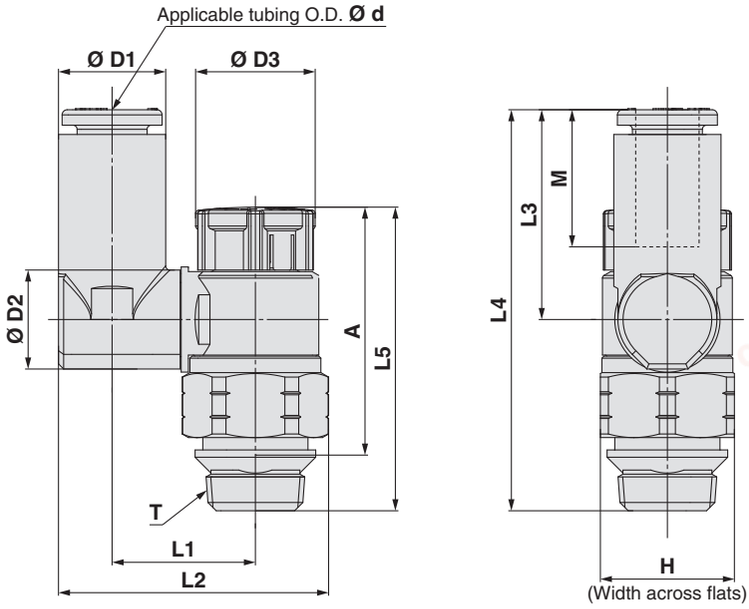

Metric Size

[mm]

Model	d	T Uni thread	H	D1	D2	D3	L1	L2	L3	L4	L5 Note 1)		A Note 2)		M	Weight [g]
											Unlocked	Locked	Unlocked	Locked		
AS23□1F-U01-23A	3.2	1/8	13	7.2	9.6	12	13.3	24	17.5	36	30.6	29.2	25.8	24.4	13.3	9
AS23□1F-U01-04A	4			8.2			13.9	25.1								
AS23□1F-U01-06A	6			10.4				26.2	20.4	38.8						10
AS23□1F-U01-08A	8			13.2	10.2		16.4	30.1	21.5	40					14.2	11
AS23□1F-U02-04A	4	1/4	17	8.2	12.9	13	16.5	29.9	17.5	40.1	36.6	35	30.2	28.6	13.3	18
AS23□1F-U02-06A	6			11.2			19	33.8	21.4	43.9						
AS23□1F-U02-08A	8			13.2				34.9	23.5	46					14.2	19
AS23□1F-U02-10A	10			15.9			20.9	38.1	24.7	47.3					15.6	20
AS33□1F-U02-06A	6	1/4	19	11.2	12.9	16.6	20.2	36	21.4	57.8	50	48.4	43.6	42	13.3	31
AS33□1F-U02-08A	8			13.2				37.1	23.5	59.9					14.2	
AS33□1F-U02-10A	10			15.9	17.4		23	41.2	26.1	62.5					15.6	32
AS33□1F-U02-12A	12			18.5				42.5	28.3	64.7					17	34
AS33□1F-U03-06A	6	3/8	19	11.2	12.9	16.6	20.2	36	21.4	50.1	42.3	40.7	35.9	34.3	13.3	31
AS33□1F-U03-08A	8			13.2				37.1	23.5	52.2					14.2	
AS33□1F-U03-10A	10			15.9	17.4		23	41.2	26.1	54.8					15.6	32
AS33□1F-U03-12A	12			18.5				42.5	28.3	57					17	34
AS43□1F-U04-10A	10	1/2	24	15.9	17.4	18.8	25.6	46.4	26.1	61.2	50.8	49.2	42.2	40.6	15.6	54
AS43□1F-U04-12A	12			18.5	21		26.2	48.3	28.3	63.4					17	56

Note 1) Reference dimensions Note 2) Reference dimensions of threads after installation

Inch Size

[mm]

Model	d	T Uni thread	H	D1	D2	D3	L1	L2	L3	L4	L5 Note 1)		A Note 2)		M	Weight [g]
											Unlocked	Locked	Unlocked	Locked		
AS23□1F-U01-01A	1/8"	1/8	13	7.2	9.6	12	13.3	24	17.5	36	30.6	29.2	25.8	24.4	13.3	9
AS23□1F-U01-03A	5/32"			8.2			13.9	25.1								
AS23□1F-U01-07A	1/4"			11.2	10.2		16.4	29.1	20.2	38.7						10
AS23□1F-U01-09A	5/16"			13.2				30.1	21.5	40					14.2	11
AS23□1F-U02-03A	5/32"	1/4	17	8.2	12.9	13	16.5	29.9	17.5	40.1	36.6	35	30.2	28.6	13.3	17
AS23□1F-U02-07A	1/4"			11.2			19	33.8	21.4	43.9					13.3	19
AS23□1F-U02-09A	5/16"			13.2				34.9	23.5	46					14.2	
AS23□1F-U02-11A	3/8"			15.9			20.9	38.1	24.7	47.3					15.6	20
AS33□1F-U02-07A	1/4"	3/8	19	11.2	12.9	16.6	20.2	36	21.4	57.8	50	48.4	43.6	42	13.3	31
AS33□1F-U02-09A	5/16"			13.2				37.1	23.5	59.9					14.2	
AS33□1F-U02-11A	3/8"			15.9	17.4		23	41.2	26.1	62.5					15.6	32
AS33□1F-U03-07A	1/4"	3/8	19	11.2	12.9	16.6	20.2	36	21.4	50.1	42.3	40.7	35.9	34.3	13.3	31
AS33□1F-U03-09A	5/16"			13.2				37.1	23.5	52.2					14.2	
AS33□1F-U03-11A	3/8"			15.9	17.4		23	41.2	26.1	54.8					15.6	32
AS43□1F-U04-11A	3/8"	1/2	24	15.9	17.4	18.8	25.6	46.4	26.1	61.2	50.8	49.2	42.2	40.6	15.6	54
AS43□1F-U04-13A	1/2"			18.5	21		26.2	48.3	28.3	63.4					17	56

Note 1) Reference dimensions Note 2) Reference dimensions of threads after installation

chanhvinh.com

Prior to Use

Female Thread Conditions Applicable to Face Seal

1. Surface roughness of bearing surface: Rz 25 or less
2. Chamfer dimension: Ø **D1**, Seal bearing surface diameter: Ø **D2** (Refer to the table below.)
3. Female thread inclination angle: 1° or less
4. Counterbore diameter when the female thread is counterbored.: Ø **D3**
   · Models with width across flats: Body width across flats x 1.1 or more
   · Models other than hexagon (Hexagon socket head male connector etc.): Body dimensions + 0.2 mm or more
   ∗ The width across flats and the body dimensions differ depending on the model even when the same thread size is used. Refer to the dimensions in the catalogue.
5. If oil content or sealant is sticking to the female thread, this may cause damage of the product. Remove it before piping.

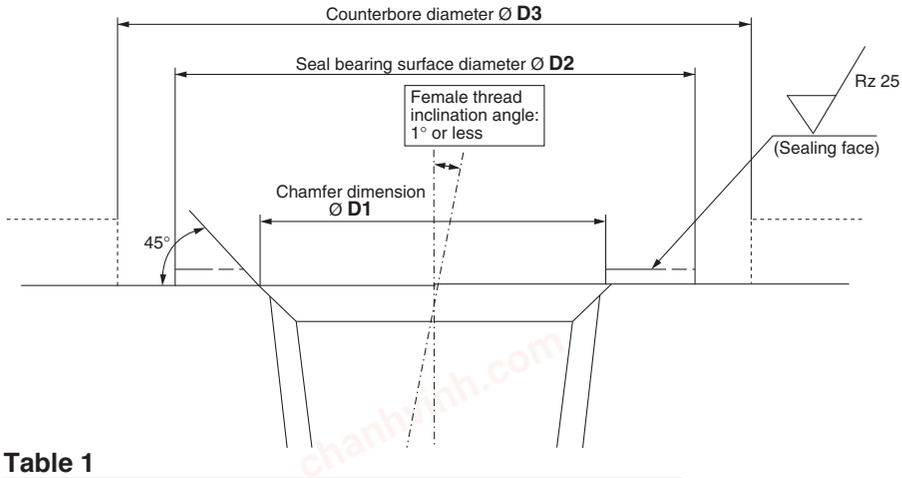

Table 1

Connection thread size	Chamfer dimension Ø **D1** mm	Seal bearing surface diameter Ø **D2** mm
R1/8	10.2 to 10.4	12 or more
R1/4	13.6 to 13.8	17 or more
R3/8	17.1 to 17.3	21 or more
R1/2	21.4 to 21.6	27 or more
NPT1/16	8.2 to 8.4	11.11 or more
NPT1/8	10.5 to 10.7	12.7 or more
NPT1/4	14.1 to 14.3	17.46 or more
NPT3/8	17.4 to 17.6	22 or more
NPT1/2	21.7 to 21.9	28.7 or more
G1/8	10.2 to 10.6	12 or more
G1/4	13.6 to 14.0	17 or more
G3/8	17.1 to 17.5	21 or more
G1/2	21.4 to 21.8	27 or more

⚠ **Precautions**

For products that do not satisfy the female thread conditions shown above and the piping with a piping pitch narrower than the product dimension, use the conventional sealant type.

∗ The rubber parts of the face seal cannot be replaced.

∗ The rubber parts of the face seal may fall off by the air blow and they cannot be mounted again. Be careful not to perform the air blow.

chanhvinh.com

Series AS
Specific Product Precautions 1

Be sure to read this before handling. Refer to the back cover for Safety Instructions. For Flow Control Equipment Precautions, refer to "Handling Precautions for SMC Products" and the Operation Manual.

Design and Selection

⚠ Warning

1. Check the specifications.

The products in this catalogue are designed to be used in compressed air systems (including vacuum) only.
If the products are used in an environment where pressure or temperature is out of the specified range, damage and/or malfunction may result. Do not use under such conditions. (Refer to the specifications.)
Please contact SMC when using a fluid other than compressed air (including vacuum).
We do not guarantee against any damage if the product is used outside of the specification range.

2. The products in this catalogue are not designed for the use as stop valve with zero air leakage.

A certain amount of leakage is allowed in the product's specifications.
Tightening the needle to reduce leakage to zero may result in equipment damage.

3. Do not disassemble the product or make any modifications, including additional machining.

It may cause human injury and/or an accident.

4. The flow-rate characteristics for each product are representative values.

The flow-rate characteristics are characteristics of each individual product. Actual values may differ depending on the piping, circuitry, pressure conditions, etc.

5. Sonic conductance (C) and critical pressure ratio (b) values for products are representative values.
The speed controller's controlled flow values are with the needle fully open and free flow with the needle fully closed.

6. Check if PTFE can be used in application.

PTFE powder (Polytetrafluoroethylene resin) is included in the seal material for piping taper thread of male thread type. Confirm that the use of it will not cause any adverse effect on the system.
Please contact SMC if the Safety Data Sheet (SDS) is required.

Mounting

⚠ Warning

1. Operation Manual

Install the products and operate them only after reading the Operation Manual carefully and understanding its contents. Also, keep the manual where it can be referred to as necessary.

2. Ensure sufficient space for maintenance activities.

When installing the products, allow access for maintenance.

3. Tighten threads with the proper tightening torque.

When installing the products, follow the listed proper torque.

Mounting

⚠ Warning

4. After pushing the knob down to lock, confirm that it is locked.

It should not be possible to rotate the knob to the right or to the left. If the knob is pulled with force, it may break. Do not pull the knob with excessive force.


Locked


Unlocked

5. Check the degree of rotation of the needle valve.

The products in this catalogue are retainer type so that the needle is not removed completely. Over rotation will cause damage.

6. Do not use tools such as pliers to rotate the knob.

It can cause idle rotation of the knob or damage.

7. Verify the air flow direction.

Mounting backward is dangerous, because the speed adjustment needle will not work and the actuator may lurch suddenly.

8. Adjust the speed by opening the needle slowly from the fully closed state.

Loose needle valves may cause unexpected sudden actuator lurching.
When a needle valve is turned clockwise, it is closed and actuator speed decreases. When a needle valve is turned counterclockwise, it is open and actuator speed increases.

9. Do not apply excessive force or shock to the body or fittings with an impact tool.

It can cause damage or air leakage.

10. Refer to the Fittings & Tubing Precautions in the Best Pneumatics No. 6 catalogue for handling One-touch fittings.

11. Tubing O.D. Ø 2

Tubing other than that from SMC cannot be used, because it may result in inability to connect the tube, air leakage after connecting the tube or disconnection of the tube.

12. To install/remove the product, use an appropriate wrench to tighten/loosen at the supplied nut on body B.

Do not apply torque at other points as the product may be damaged. Rotate body A manually for positioning after installation.

chanhvinh.com

Series AS
Specific Product Precautions 2

Be sure to read this before handling. Refer to the back cover for Safety Instructions. For Flow Control Equipment Precautions, refer to "Handling Precautions for SMC Products" and the Operation Manual.

Mounting

⚠ Warning

13. Do not use body A and/or elbow body for applications involving continuous rotation.

Body A and the fitting section may be damaged.

Elbow

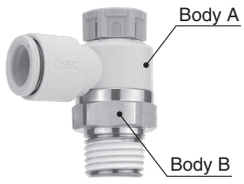

Universal

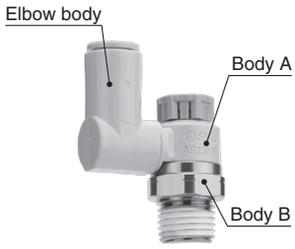

⚠ Caution

For M5, 10-32UNF

Tightening method

First, tighten it by hand, then give it an additional 1/6 turn to 1/4 turn with a wrench. A reference value for the tightening torque is 1 to 1.5 N·m.

Note) Excessive tightening may damage the thread portion or deform the gasket and cause air leakage.
If the screw is too shallowly screwed in, it may come loose or air may leak.

Chamfered area for female thread

1. Conforming to ISO 16030 (air pressure fluid dynamics – connection – ports and stud ends), the chamfered dimensions shown in the table below are recommended.

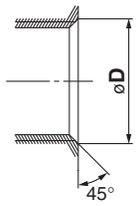

Female thread size	Chamfered dimension Ø **D** (Recommended value)
M5	5.1 to 5.4
10-32UNF	5.0 to 5.3

2. This product has a stopper for fully close in rotating direction. Excess torque may break the stopper. Table below shows the maximum allowable torque of the knob.

Body size	Maximum allowable torque [N·m]
M5	0.05
1/8	0.07
1/4	0.16
3/8	0.2
1/2	0.4

3. When performing the piping work, turn the tightening tool in the horizontal direction to the hexagon across flats of the body B so that any moment is not applied to the body A. If the tool is in contact with the body A, this may cause the body B to come off.

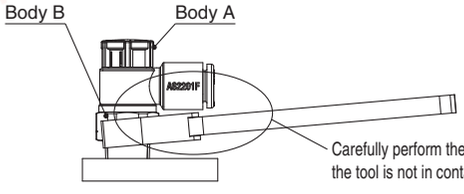

⚠ Caution

For R, NPT Thread (With sealant)

Tightening method

1. The proper tightening torques of the fittings are as shown in the table below. As a guide, tighten by hand, then turn it two or three turns with a wrench. Check the dimensions of each product for the hexagon width across flats.

Connection thread size	Proper tightening torque [N·m]
NPT, R 1/8	3 to 5
NPT, R 1/4	8 to 12
NPT, R 3/8	15 to 20
NPT, R 1/2	20 to 25

Chamfered area for female thread

By chamfering as shown in the table below, machining of threads is easier and effective for burr prevention.

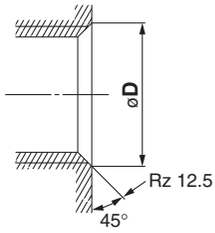

Connection thread size	Chamfered dimension Ø **D** (Recommended value)	
	Rc	NPT, NPTF
1/8	10.2 to 10.4	10.5 to 10.7
1/4	13.6 to 13.8	14.1 to 14.3
3/8	17.1 to 17.3	17.4 to 17.6
1/2	21.4 to 21.6	21.7 to 21.9

∗ For Uni thread, Rz 12.5 is necessary for sealing at the chamfered part.

For R, NPT, G Thread (Face seal type)

Tightening method

First, tighten the threaded portion by hand, then use a proper wrench, which could be suitable for the width across flats of the hexagon body, to tighten it further at a wrench tightening angle shown in the table below. For a tightening torque guide, refer to the table below. Check the dimensions of each product for the hexagon width across flats.

1. Tighten fittings with face seal using the proper tightening torques in the table below.

Connection thread size (R, NPT, G)	Proper tightening torque [N·m]
1/16, 1/8	3 to 5
1/4	8 to 12
3/8	15 to 20
1/2	20 to 25

2. Insufficient tightening may cause seal failure, or loosen the threads.
3. Reuse
   1) Normally, fittings with face seal can be reused 6 to 1 0 times.
   2) The seal ring cannot be replaced.

chanhvinh.com

Series AS
Specific Product Precautions 3

Be sure to read this before handling. Refer to the back cover for Safety Instructions. For Flow Control Equipment Precautions, refer to "Handling Precautions for SMC Products" and the Operation Manual.

Mounting

⚠Caution

For R, NPT, G Thread (Face seal type)

Chamfered area for female thread (Recommended value)

1. Conforming to ISO 16030-2001, the chamfered dimensions shown in the table below are recommended. By chamfering as shown in the table below, machining of threads is easier and effective for burr prevention.

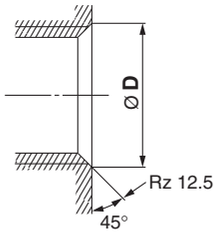

Nominal thread size	Chamfered dimension Ø D	
	Min.	Max.
1/8	9.8	10.2
1/4	13.3	13.7
3/8	16.8	17.2
1/2	21.0	21.4

2. Use G external threads with G internal threads.

How to distinguish between G, R and NPT threads

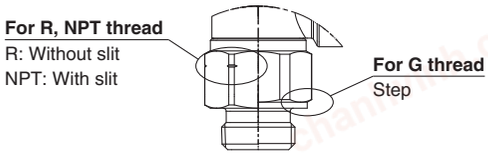

For Uni Thread

Tightening method

1. First, tighten the threaded portion by hand, then use a proper wrench, which could be suitable for the width across flats of the hexagon body, to tighten it further at a wrench tightening angle shown in the table below. For a tightening torque guide, refer to the table below.

Connection Female Thread: Rc, NPT, NPTF

Uni thread size	Wrench tightening angle after hand-tightening [deg]	Tightening torque [N·m]
1/8	30 to 60	3 to 5
1/4	30 to 60	8 to 12
3/8	15 to 45	14 to 16
1/2	15 to 30	20 to 22

Connection Female Thread: G

Uni thread size	Wrench tightening angle after hand-tightening [deg]	Tightening torque [N·m]
1/8	30 to 45	3 to 4
1/4	15 to 30	4 to 5
3/8	15 to 30	8 to 9
1/2	15 to 30	14 to 15

2. The gasket can be reused up to 6 to 10 times.

Chamfered area for female thread

By chamfering as shown in the table below, machining of threads is easier and effective for burr prevention.

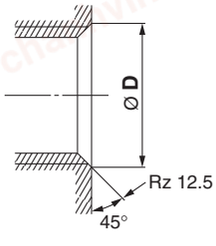

Connection thread size	Chamfered dimension Ø D (Recommended value)		
	G	Rc	NPT, NPTF
1/8	10.2 to 10.6	10.2 to 10.4	10.5 to 10.7
1/4	13.6 to 14.0	13.6 to 13.8	14.1 to 14.3
3/8	17.1 to 17.5	17.1 to 17.3	17.4 to 17.6
1/2	21.4 to 21.8	21.4 to 21.6	21.7 to 21.9

∗ For Uni thread, Rz 12.5 is necessary for sealing at the chamfered part.

Piping Threads with Sealant

⚠Caution

1. If the fitting is tightened with excessive torque, a large amount of sealant will seep out. Remove the excess sealant.

2. Insufficient tightening may loosen the threads, or cause air leakage.

3. Reuse

1) Normally, fittings with sealant can be reused 2 to 3 times.
2) To prevent air leakage through the sealant, remove any loose sealant stuck to the fitting by blowing air over the threaded portion.
3) If the sealant no longer provides effective sealing, wrap sealing tape over the sealant before reusing. Do not use the sealant in any form other than a tape type.

4. Once the fitting has been tightened, backing it out to its original position often causes the sealant to become defective. Air leakage will occur.

5. Use R external threads with Rc internal threads and NPT external threads with NPT internal threads.

Piping

⚠Caution

1. Refer to the Fittings & Tubing Precautions in the Best Pneumatics No. 6 catalogue for handling One-touch fittings.

2. Preparation before piping

Before piping is connected, it should be thoroughly blown out with air (flushing) or washed to remove chips, cutting oil and other debris from inside the pipe.

3. Wrapping of sealant tape

When screwing together pipes and fittings, etc., be certain that chips from the pipe threads and sealing material do not get inside the pipe. Also, when the sealant tape is used, leave approx. 1 thread ridges exposed at the end of the threads.

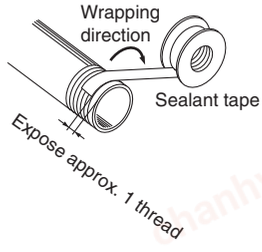

chanhvinh.com

⚠ Safety Instructions

These safety instructions are intended to prevent hazardous situations and/or equipment damage. These instructions indicate the level of potential hazard with the labels of **"Caution," "Warning"** or **"Danger."** They are all important notes for safety and must be followed in addition to International Standards (ISO/IEC) [1], and other safety regulations.

⚠ **Danger:**	**Danger** indicates a hazard with a high level of risk which, if not avoided, will result in death or serious injury.
⚠ **Warning:**	**Warning** indicates a hazard with a medium level of risk which, if not avoided, could result in death or serious injury.
⚠ **Caution:**	**Caution** indicates a hazard with a low level of risk which, if not avoided, could result in minor or moderate injury.

1) ISO 4414: Pneumatic fluid power – General rules and safety requirements for systems and their components.
ISO 4413: Hydraulic fluid power – General rules and safety requirements for systems and their components.
IEC 60204-1: Safety of machinery – Electrical equipment of machines. (Part 1: General requirements)
ISO 10218-1: Robots and robotic devices - Safety requirements for industrial robots - Part 1: Robots.
etc.

⚠ Warning

1. The compatibility of the product is the responsibility of the person who designs the equipment or decides its specifications.
Since the product specified here is used under various operating conditions, its compatibility with specific equipment must be decided by the person who designs the equipment or decides its specifications based on necessary analysis and test results. The expected performance and safety assurance of the equipment will be the responsibility of the person who has determined its compatibility with the product. This person should also continuously review all specifications of the product referring to its latest catalogue information, with a view to giving due consideration to any possibility of equipment failure when configuring the equipment.

2. Only personnel with appropriate training should operate machinery and equipment.
The product specified here may become unsafe if handled incorrectly. The assembly, operation and maintenance of machines or equipment including our products must be performed by an operator who is appropriately trained and experienced.

3. Do not service or attempt to remove product and machinery/ equipment until safety is confirmed.
1. The inspection and maintenance of machinery/equipment should only be performed after measures to prevent falling or runaway of the driven objects have been confirmed.
2. When the product is to be removed, confirm that the safety measures as mentioned above are implemented and the power from any appropriate source is cut, and read and understand the specific product precautions of all relevant products carefully.
3. Before machinery/equipment is restarted, take measures to prevent unexpected operation and malfunction.

4. Our products cannot be used beyond their specifications.
Our products are not developed, designed, and manufactured to be used under the following conditions or environments.
Use under such conditions or environments is not covered.
1. Conditions and environments outside of the given specifications, or use outdoors or in a place exposed to direct sunlight.
2. Use for nuclear power, railways, aviation, space equipment, ships, vehicles, military application, equipment affecting human life, body, and property, fuel equipment, entertainment equipment, emergency shut-off circuits, press clutches, brake circuits, safety equipment, etc., and use for applications that do not conform to standard specifications such as catalogues and operation manuals.
3. Use for interlock circuits, except for use with double interlock such as installing a mechanical protection function in case of failure. Please periodically inspect the product to confirm that the product is operating properly.

⚠ Caution

We develop, design, and manufacture our products to be used for automatic control equipment, and provide them for peaceful use in manufacturing industries.
Use in non-manufacturing industries is not covered.
Products we manufacture and sell cannot be used for the purpose of transactions or certification specified in the Measurement Act.
The new Measurement Act prohibits use of any unit other than SI units in Japan.

Limited warranty and Disclaimer/Compliance Requirements

The product used is subject to the following "Limited warranty and Disclaimer" and "Compliance Requirements".Read and accept them before using the product.

Limited warranty and Disclaimer

1. The warranty period of the product is 1 year in service or 1.5 years after the product is delivered, whichever is first. [2] Also, the product may have specified durability, running distance or replacement parts. Please consult your nearest sales branch.
2. For any failure or damage reported within the warranty period which is clearly our responsibility, a replacement product or necessary parts will be provided. This limited warranty applies only to our product independently, and not to any other damage incurred due to the failure of the product.
3. Prior to using SMC products, please read and understand the warranty terms and disclaimers noted in the specified catalogue for the particular products.

2) Vacuum pads are excluded from this 1 year warranty.
A vacuum pad is a consumable part, so it is warranted for a year after it is delivered. Also, even within the warranty period, the wear of a product due to the use of the vacuum pad or failure due to the deterioration of rubber material are not covered by the limited warranty.

Compliance Requirements

1. The use of SMC products with production equipment for the manufacture of weapons of mass destruction (WMD) or any other weapon is strictly prohibited.
2. The exports of SMC products or technology from one country to another are governed by the relevant security laws and regulations of the countries involved in the transaction. Prior to the shipment of a SMC product to another country, assure that all local rules governing that export are known and followed.

chanhvinh.com

SMC Corporation (Europe)

Austria	+43 (0)2262622800	www.smc.at	office.at@smc.com
Belgium	+32 (0)33551464	www.smc.be	info@smc.be
Bulgaria	+359 (0)2807670	www.smc.bg	sales.bg@smc.com
Croatia	+385 (0)13707288	www.smc.hr	sales.hr@smc.com
Czech Republic	+420 541424611	www.smc.cz	office.at@smc.com
Denmark	+45 70252900	www.smcdk.com	smc.dk@smc.com
Estonia	+372 651 0370	www.smcee.ee	info.ee@smc.com
Finland	+358 207513513	www.smc.fi	smc.fi@smc.com
France	+33 (0)164761000	www.smc-france.fr	smc.fi@smc.com
Germany	+49 (0)61034020	www.smc.de	info.de@smc.com
Greece	+30 210 2717265	www.smchellas.gr	sales@smchellas.gr
Hungary	+36 23513000	www.smc.hu	office.hu@smc.com
Ireland	+353 (0)14039000	www.smcautomation.ie	technical.ie@smc.com
Italy	+39 03990691	www.smcitalia.it	mailbox.it@smc.com
Latvia	+371 67817700	www.smc.lv	info.lv@smc.com
Lithuania	+370 5 2308118	www.smclt.lt	info.lt@smc.com
Netherlands	+31 (0)205318888	www.smc.nl	info@smc.nl
Norway	+47 67129020	www.smc-norge.no	post.no@smc.com
Poland	+48 222119600	www.smc.pl	technical.ie@smc.com
Portugal	+351 214724500	www.smc.eu	apoiocliente.pt@smc.com
Romania	+40 213205111	www.smcromania.ro	office.ro@smc.com
Russia	+7 (812)3036600	www.smc.eu	sales@smcru.com
Slovakia	+421 (0)413213212	www.smc.sk	sales.sk@smc.com
Slovenia	+386 (0)73885412	www.smc.si	office.si@smc.com
Spain	+34 945184100	www.smc.eu	post.es@smc.com
Sweden	+46 (0)86031240	www.smc.nu	order.se@smc.com
Switzerland	+41 (0)523963131	www.smc.ch	helpcenter.ch@smc.com
Turkey	+90 212 489 0 440	www.smcturkey.com.tr	satis@smcturkey.com.tr
UK	+44 (0)845 121 5122	www.smc.uk	sales.gb@smc.com
South Africa	+27 10 900 1233	www.smcza.co.za	Sales.za@smc.com

Printing CZ 00 Printed in Spain

Specifications are subject to change without prior notice and any obligation on the part of the manufacturer