chanhvinh.com

Modular Connection Type

Compressed Air Preparation Filter

RoHS

Compressed Air Purity Class ISO 8573

Solid/Oil Separation

- **Line Filter *AFF* Series** — 1 µm — Water droplet removal
- **Mist Separator *AM* Series** — 0.1 µm — Oil mist separation and removal
- **Micro Mist Separator *AMD* Series** — 0.01 µm — Oil mist separation and removal

Deodorization

- **Activated Carbon Filter *AMK* Series** — Oil concentration 0.003 mg/m³ — Oil vapor and odor removal

Flow capacity	l/min (ANR)
20	Up to 300
30	Up to 750
40	Up to 1500
50	Up to 2200
60	Up to 3700

Weight reduced by 50 % p. 4

AFF/AM/AMD20-D: **0.19 kg** (Existing model: 0.38 kg)

Face-to-face and depth dimensions reduced by 30 %

AFF/AM□30-D: □**53 mm** (Existing model: □76 mm)

Modular connection is possible. p. 1





New With clogging switch p. 3

The clogging status can be identified by the switch output.



AFF/AM/AMD/AMK Series

SMC

CAT.EUS30-22D-UK

chanhvinh.com

Reduced pressure drop contributes to energy saving.

AMD AMK

Flow capacity

3700 l/min (ANR)

Pressure drop

Max. 50 % reduction

AMD40: 6.8 kPa (Existing model AMD350C: 13.6 kPa)
AMK40: 4.7 kPa (Existing model AMF350C: 9.4 kPa)

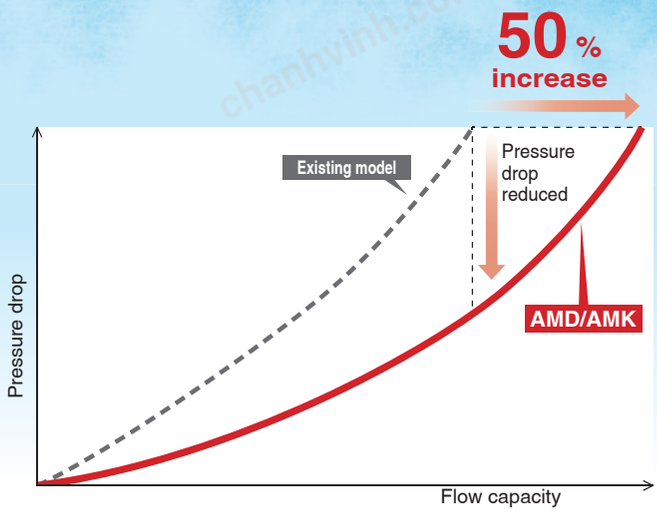

Space-saving design and reduced piping labour

AFF Series

AFF

	AMG250C + AFF4C	AFF30-D	
Face-to-face dimension	≈ 202 mm	53 mm	Approx. 150 mm reduction

The AFF series line filter removes both water droplets and solid particles. It can eliminate*1 a separate filter for removing water droplets (water separator, AMG series), thus greatly reducing the face-to-face dimension and also reducing the required installation space and piping work.

*1 When used within the product's specification range

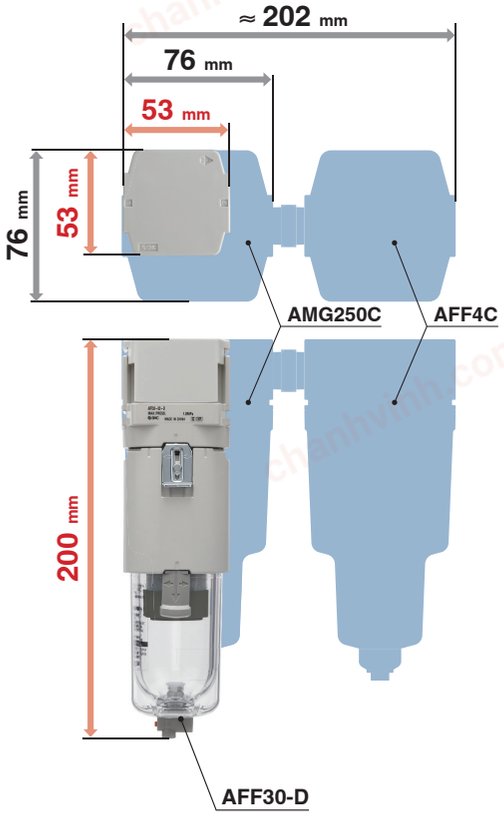

Modular connection (AM + AMD + AMK)

AM AMD AMK

	AMH250C + AME250C + AMF250C	AM30-D + AMD30-D + AMK30-D	
Face-to-face dimension	≈ 236 mm	≈ 167 mm	Approx. 69 mm reduction
Weight	1.51 kg	1.17 kg	23 % reduction
Flow capacity	500 l/min (ANR)	750 l/min (ANR)	50 % increase

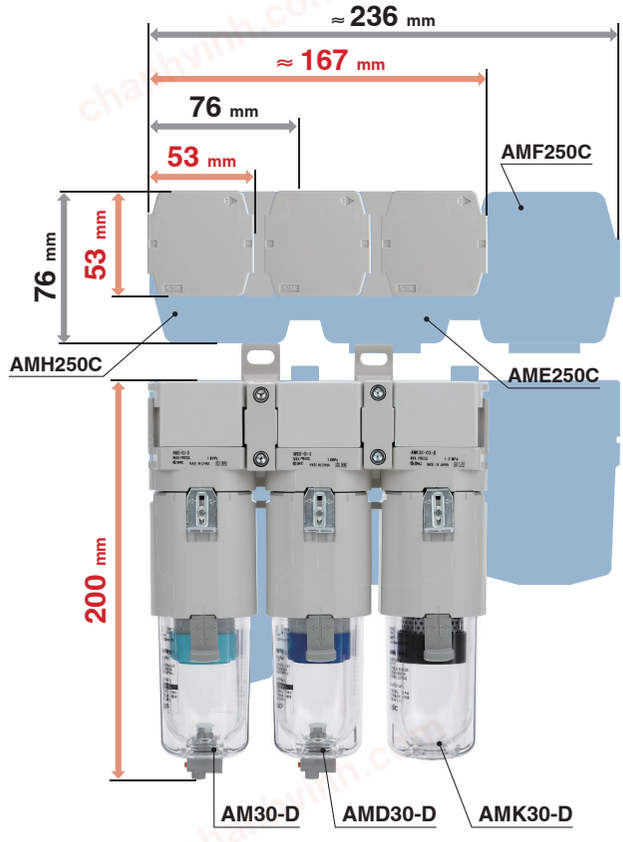

chanhvinh.com

The differential pressure check mode (PSE200A series) allows for the quantification of the clogging state of each filter element.

As the filter element does its job, the amount of clogging will gradually increase, resulting in **a drop in the pressure**.
Ignoring this will lead to **energy loss**.

Example 1
Reduced thrust due to pressure drop

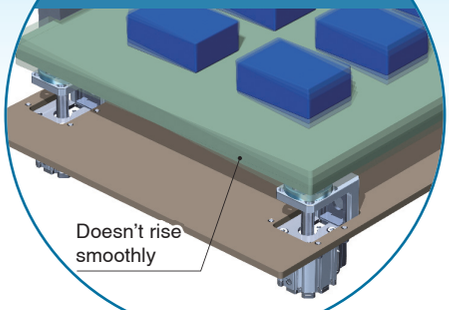

Example 2
Adsorption errors due to reduced flow rate

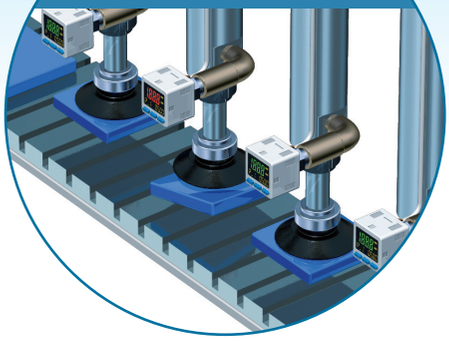

Element replacement period

Within **2** years*1 of the start of use
or
Before the differential pressure reaches **0.1** MPa

*1 Within 1 year for the AMK series

In order to prevent the above

The differential pressure of 2 filters can be managed by a single unit.

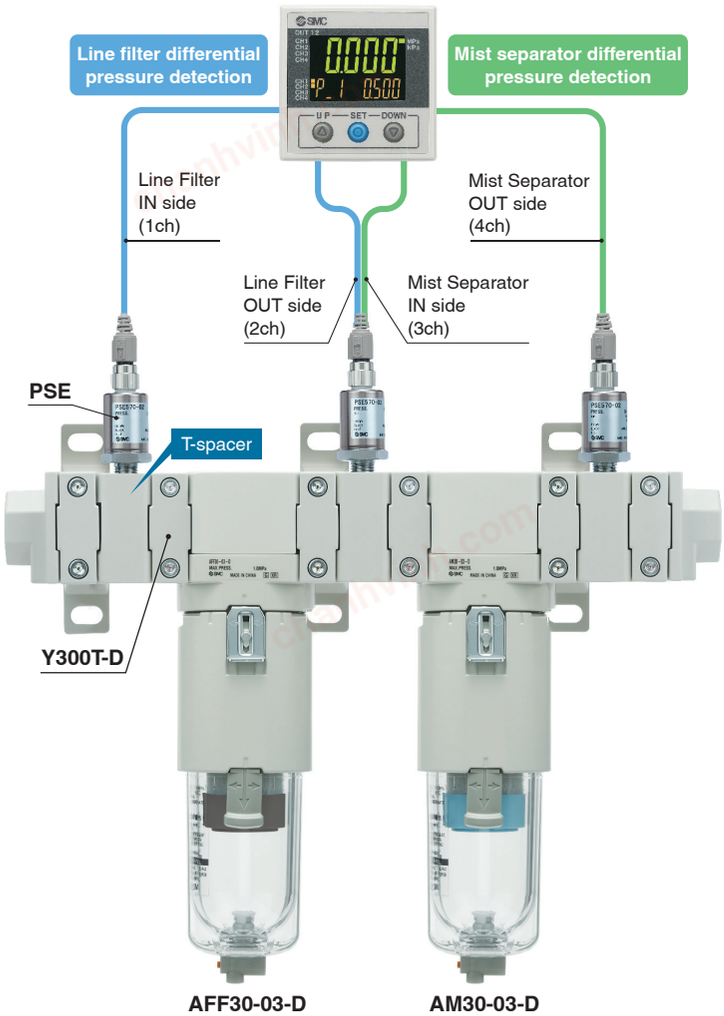

The differential pressure value to be output can be set freely according to the customer's system conditions.

[Ex.) When the differential pressure value to be output is set to 0.08 MPa]

Continuously monitored remotely via IO-Link communication

Once 0.08 MPa is reached, a signal is output.

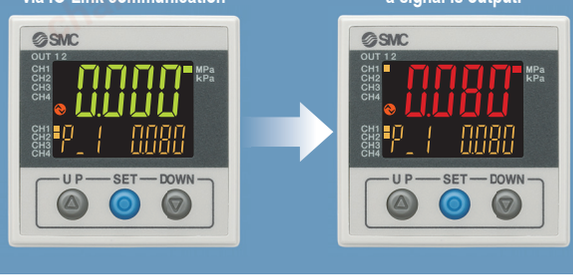

Related Product

Multi-channel Digital Sensor Monitor
***PSE200A* Series**



chanhvinh.com

Easier replacement of the element

AFF AM AMD AMK

Size 50/60

The stopper function prevents the bowl from falling.

The bowl will not fall even if the bolts are loosened. It is not necessary to hold the bowl when removing the bolts. Safe and secure mounting and removing of the bowl with both hands is possible. The lightweight stainless bowl with reduced thickness allows for easier element replacement.

1 Loosen the 4 securing bolts.

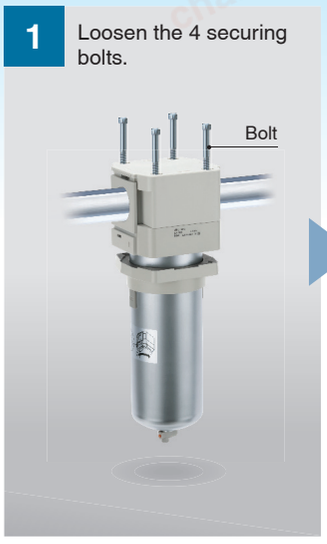

2 Rotate the bowl to release the stopper. Pull it down to remove the bowl.



3 At least 30 mm of maintenance space is necessary for removing the bowl.



Size 20 to 40

No tools are required.

Easy replacement of the element is possible as the element and the bowl are in one piece. Replacement can be done in hand.

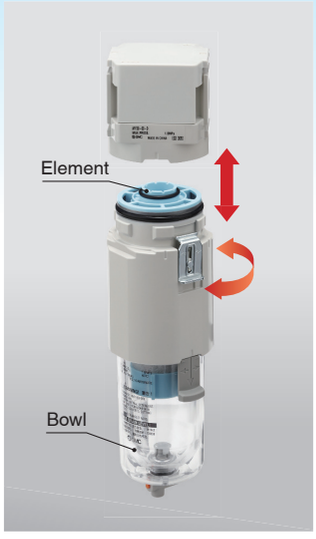

Element replacement notification

AFF AM AMD

New With clogging switch



The clogging status can be identified by the switch output.

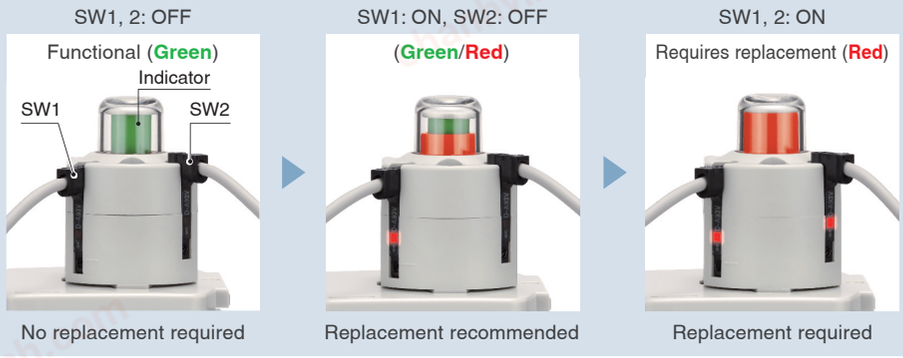

With element service indicator



The clogging status can be checked visually (green/red).

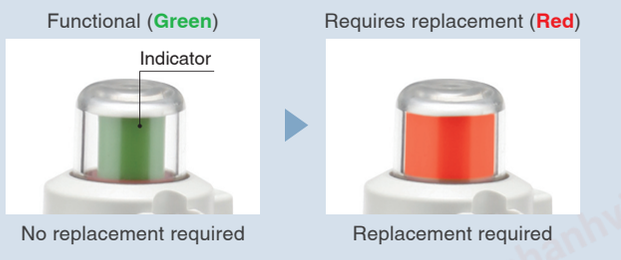

chanhvinh.com

Lightweight

AFF AM AMD AMK

Weight

Max. 50 % lighter[*1]

0.38 kg ➡ **0.19 kg**

Series	Size	Weight [kg]	Reduction rate [%]
AFF/AM/AMD[*1] 	20	0.38 ➡ **0.19**	50
	30	0.55 ➡ **0.39**	29
	40	0.9 ➡ **0.79**	12
	50	1.4 ➡ **1.23**	12
	60	2.1 ➡ **1.46**	30
AMK[*2] 	20	0.3 ➡ **0.19**	37
	30	0.48 ➡ **0.39**	19
	40	0.8 ➡ **0.79**	1.3
	50	1.3 ➡ **1.25**	4
	60	2.0 ➡ **1.50**	25

*1 Compared with existing products (AFF□C, AM□C, and AMD□C series)
*2 Compared with existing products (AMF□C series)

Colour-identifiable elements

AFF AM AMD AMK

This eliminates the accumulation of condensate. Even high-velocity fluid is not spattered. The result is a compact bowl design.

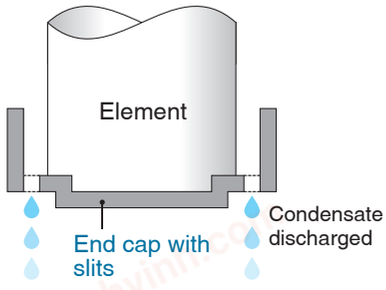

Condensate is not accumulated, so no water flows to the downstream side.



3 models (AFF/AM/AMD) with an end cap with slits

Transparent bowl guard (2-layer construction)[*1]

AFF AM AMD AMK

- The inside is visible from 360°.
- The bowl is completely protected from the environment, allowing for improved safety.



*1 Size 20 to 40 only

Improved flow capacity

AMK

Increased by up to 50 %

[l/min(ANR)]

Size	AMF	AMK	Improvement rate [%]
20	200	New **300**	50
30	500	**750**	50
40	1000	**1500**	50
50	2000	**2200**	10

chanhvinh.com

Variations

Series	Size	Port size (1/8 1/4 3/8 1/2 3/4 1)	Flow capacity l/min (ANR)	Option/ Accessory
AFF Series p. 8 Line Filter Large dust particle filtration, Water droplet separation Water droplet removal ratio: 99 % Nominal filtration rating: 1 μm [Filtration efficiency: 99 %]  Grey	20	1/4	300	
	30	3/8	750	
	40	1/2	1500	
	50	3/4	2200	
	60	1	3700	
AM Series p. 8 Mist Separator Dust filtration, Oil mist separation Nominal filtration rating: 0.1 μm [Filtration efficiency: 99 %] Oil mist concentration on the outlet side: Max. 1.0 mg/m³ [≈ 0.8 ppm]  Light blue	20	1/4	300	· Bracket · Auto drain · Element service indicator · Clogging switch
	30	3/8	750	
	40	1/2	1500	
	50	3/4	2200	
	60	1	3700	
AMD Series p. 8 Micro Mist Separator Dust filtration, Oil mist separation Nominal filtration rating: 0.01 μm [Filtration efficiency: 99.9%] Oil mist concentration on the outlet side: Max. 0.1 mg/m³ [≈ 0.08 ppm]  Blue	20	1/4	300	
	30	3/8	750	
	40	1/2	1500	
	50	3/4	2200	
	60	1	3700	
AMK Series p. 20 Activated Carbon Filter Removes oil vapor and odor from compressed air Oil concentration on the outlet side: Max. 0.003 mg/m³ [≈ 0.0025 ppm]  Dark grey	20	1/4	300	
	30	3/8	750	
	40	1/2	1500	· Bracket
	50	3/4	2200	
	60	1	3700	

chanhvinh.com

Compliant with ISO 8573 Compressed Air Purity Class

Systems which are in compliance with the degree of purity required for compressed air (For details ➡ page 31)

System example 1)

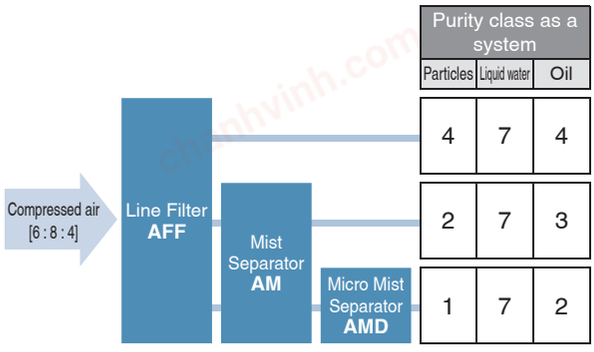

System example 2)

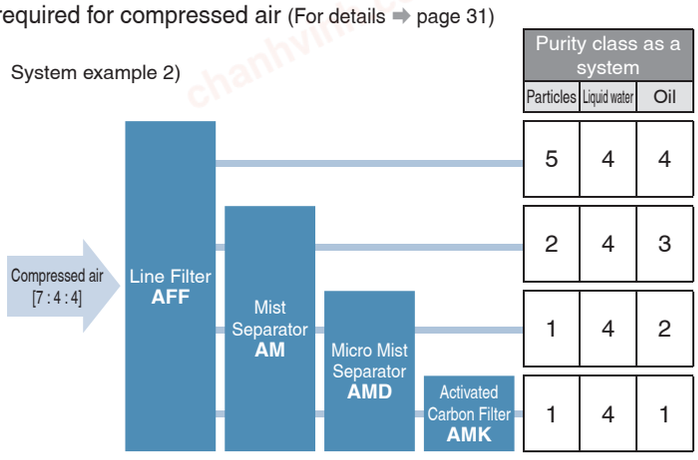

Certified by a third party organization

Contaminants	ISO 12500: Filters for compressed air – test methods	ISO 8573: Compressed air
Particles	ISO 12500-3:2009 Filters for compressed air – test methods – **Particulates**	ISO 8573-4:2001 Compressed air – Test methods for **solid particle content**
Liquid water	ISO 12500-4:2009 Filters for compressed air – test methods – **Water**	ISO 8573-9:2004 Compressed air – Test methods for **liquid water content**
Oil	ISO 12500-1:2007 Filters for compressed air – test methods – **Oil aerosols**	ISO 8573-2:2007 Compressed air – Test methods for **oil aerosol content**

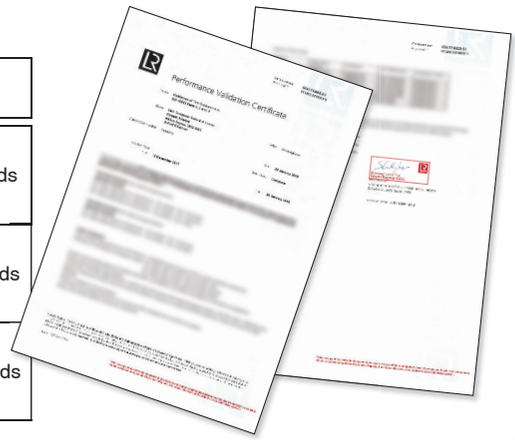

Simple Specials System

Simple Specials System



A system designed to respond quickly and easily to your special ordering needs

For modular connection units (shipped assembled), the simple specials system can be used.

Short lead times

This system enables us to respond to your special needs (additional machining, accessory assembly, or the designing of a modular unit) and deliver your personalized products as quickly as standard products.

Repeat orders

Once we receive a simple special part number from one of your previous orders, we will process the order, manufacture the product, and deliver it to you as quickly as possible.

Please contact your local sales representative for more details.

chanhvinh.com

CONTENTS

Modular Connection Type Compressed Air Preparation Filter
AFF/AM/AMD/AMK Series

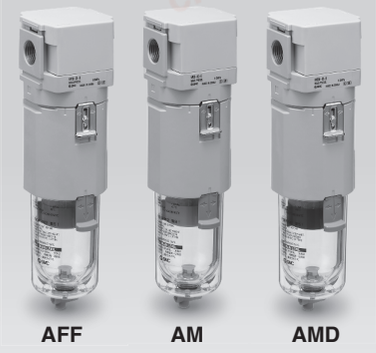

Compressed Air Preparation Filter
AFF/AM/AMD Series

How to Order ..... p. 8

Line Filter AFF Series

Standard Specifications ..... p. 9

Flow Rate Characteristics ..... p. 10

Mist Separator AM Series

Standard Specifications ..... p. 11

Flow Rate Characteristics ..... p. 12

Micro Mist Separator AMD Series

Standard Specifications ..... p. 13

Flow Rate Characteristics ..... p. 14

Construction ..... p. 15

Dimensions ..... p. 17



Activated Carbon Filter
AMK Series

How to Order ..... p. 20

Activated Carbon Filter AMK Series

Standard Specifications ..... p. 21

Flow Rate Characteristics ..... p. 22

Construction ..... p. 23

Dimensions ..... p. 25

Modular Connection Example ..... p. 27

Accessories Sold Separately ..... p. 29

Clogging Switch Auto Switch Specifications (D-A93VL) ..... p. 30

International Standard ISO 8573-1:2010 ..... p. 31

Specific Product Precautions ..... p. 32

chanhvinh.com

Compressed Air Preparation Filter

Line Filter/Mist Separator/Micro Mist Separator

AFF/AM/AMD Series

RoHS

Symbol

Line Filter

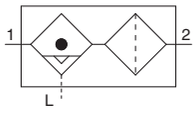

Mist Separator
Micro Mist Separator

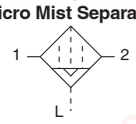

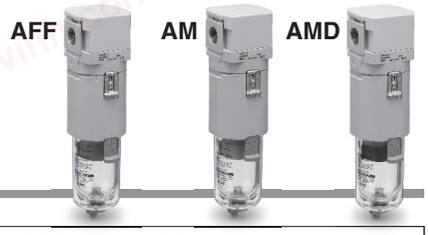

How to Order

AFF 30 – ❸ 03 BD – ❻ – D

❶ ❷ ❸ ❹ ❺ ❻

· Option/Semi-standard: Select one each for **a** to **g**.
· Option/Semi-standard symbol: When more than one specification is required, indicate in alphanumeric order.
Example) AM30-N03BD-6RZ-D

			Symbol	Description	❷ Body size 20	30	40	50	60
❶	Filter type		AFF	Nominal filtration rating: 1 μm Water droplet removal ratio: 99 %	●	●	●	●	●
			AM	Nominal filtration rating: 0.1 μm Oil mist concentration on the outlet side: 1 mg/m³	●	●	●	●	●
			AMD	Nominal filtration rating: 0.01 μm Oil mist concentration on the outlet side: 0.1 mg/m³	●	●	●	●	●
			+						
❸	Thread type		—	Rc	●	●	●	●	●
			N*1	NPT	●	●	●	●	●
			F*2	G	●	●	●	●	●
			+						
❹	Port size		01	1/8	●	—	—	—	—
			02	1/4	●	●	●	—	—
			03	3/8	—	●	●	—	—
			04	1/2	—	—	●	—	—
			06	3/4	—	—	—	●	—
			10	1	—	—	—	●	●
			+						
❺	Option	a Mounting	—	Without mounting option	●	●	●	●	●
			B*3	With bracket	●	●	●	●	●
			+						
		b Float type auto drain	—	Without auto drain	●	●	●	●	●
			C*4	N.C. (Normally closed)	●	●	●	●	●
			D*5	N.O. (Normally open)	—	●	●	●	●
			+						
❻	Semi-standard	c Bowl*6	—	Polycarbonate bowl	●	●	●	—	—
				Stainless steel bowl	—	—	—	●	●
			2	Metal bowl	●	●	●	—	—
			6	Nylon bowl	●	●	●	—	—
			8	Metal bowl with level gauge	—	●	●	—	—
			C	With bowl guard	●	—*7	—*7	—	—
			6C	With bowl guard (Nylon bowl)	●	—*8	—*8	—	—
			+						
		d Drain port*9	—	With drain cock	●	●	●	●	●
			J*10	Drain guide 1/8	●	—	—	—	—
				Drain guide 1/4	—	●	●	●	●
			W*11	Drain cock, Barb fitting (O 6)	—	●	●	●	●
			+						
		e Indicator*12	—	Without indicator	●	●	●	●	●
			L*13	With element service indicator	●	●	●	●	●
			M*14	With clogging switch (1 point)	●	●	●	●	●
			MM*14	With clogging switch (2 points)	●	●	●	●	●
			+						
		f Flow direction	—	Flow direction: Left to right	●	●	●	●	●
			R	Flow direction: Right to left	●	●	●	●	●
			+						
		g Unit	—	Name plate and caution plate for bowl in SI units: MPa, °C	●	●	●	●	●
			Z*15	Name plate and caution plate for bowl in imperial units: psi, °F	○*16	○*16	○*16	○*16	○*16

*1 The drain guide is either NPT1/8 (applicable to the AFF20, AM20, and AMD20) or NPT1/4 (applicable to the AFF30 to AFF60, AM30 to AM60, and AMD30 to AMD60). The auto drain port comes with a O 3/8" One-touch fitting (applicable to the AFF30 to AFF60, AM30 to AM60, and AMD30 to AMD60).
*2 The drain guide is either G1/8 (applicable to the AFF20, AM20, and AMD20) or G1/4 (applicable to the AFF30 to AFF60, AM30 to AM60, and AMD30 to AMD60).
*3 A bracket is not assembled and supplied loose at the time of shipment. Including 2 mounting screws.
*4 When pressure is not applied, condensate which does not start the auto drain mechanism will be left in the bowl. Releasing the residual condensate before ending operations for the day is recommended.
*5 If the compressor is small (0.75 kW, discharge flow is less than 100 l/min (ANR)), air leakage from the drain cock may occur during the start of operations. The N.C. type is recommended.
*6 Refer to the chemical data on page 32 for chemical resistance of the bowl.
*7 A bowl guard is provided as standard equipment (polycarbonate).
*8 A bowl guard is provided as standard equipment (nylon).
*9 The combination of float type auto drain C and D is not available.
*10 Without a valve function. The mounting screws are the same as the thread of ❸.
*11 The combination of metal bowl 2 and 8 is not available.
*12 After purchase, option "—" (Without indicator) cannot be changed to option "L" (With element service indicator), "M," or "MM" (With clogging switch).
*13 An auto switch cannot be installed with this option.
*14 This option is equipped with a reed auto switch (model: D-A93VL). Contact SMC for other compatible models. Refer to page 30 for the auto switch specifications.
*15 For pipe thread type: NPT
This product is for overseas use only according to the new Measurement Act. (The SI unit type is provided for use in Japan.)
*16 ○: For pipe thread type: NPT only

chanhvinh.com

Line Filter AFF Series

Standard Specifications

Model			AFF20	AFF30	AFF40	AFF50	AFF60
Fluid			Compressed air				
Ambient and fluid temperatures		°C	-5 to 60 (No freezing)				
Proof pressure		MPa	1.5				
Max. operating pressure		MPa	1.0				
Min. operating pressure		MPa	0.05				
Auto drain minimum operating pressure	(N.C.)	MPa	0.1	0.15			
	(N.O.)	MPa	—	0.1			
Nominal filtration rating[*1]		μm	1 (Filtration efficiency: 99 %)				
Water droplet removal ratio[*2]		%	99				
Compressed air purity class[*3]		—	ISO 8573-1:2010 [4 : 7 : 4][*4]				
Max. flow capacity[*5]		l/min (ANR)	300	750	1500	2200	3700
Port size		—	1/8, 1/4	1/4, 3/8	1/4, 3/8, 1/2	3/4, 1	1
Weight		kg	0.19	0.39	0.79	1.23	1.46
Bowl material			Polycarbonate			Stainless steel	
Bowl guard			Semi-standard (Steel)	Standard (Polycarbonate)		—	
Drain capacity		cm^3	8	25	45	100	

∗1 For the following conditions in accordance with [Measurement: ISO 8573-4:2001, Test method ISO 12500-3:2009 compliant] in addition to the conditions above
- · When the air flow capacity, inlet pressure, and the amount of solid or liquid particles on the filter inlet side are stable
- · When a new element is used

∗2 For the following conditions in accordance with [Test condition: ISO 12500-4:2009 compliant] in addition to the conditions above
- · Water droplet on the filter inlet side = 33 g/m^3
  (Water droplet indicates condensed moisture. Water vapor which is not condensed is not included.)
- · Inlet temperature = 25 °C
- · When the air flow capacity, inlet pressure, and the amount of water droplets on the filter inlet side are stable
- · When a new element is used

∗3 The compressed air purity class is indicated based on ISO 8573-1:2010 Compressed air – Part 1: Contaminants and purity classes.
For details on this standard, refer to page 31.

∗4 The compressed air quality class on the inlet side is [6 : 8 : 4].

∗5 Inlet pressure: 0.7 MPa
Flow at 20 °C, atmospheric pressure, and 65 % of the relative humidity

chanhvinh.com

Line Filter AFF Series

Flow Rate Characteristics (Representative values)

* Compressed air over the max. flow capacity line in the table below may not meet the specifications of the product.

AFF20

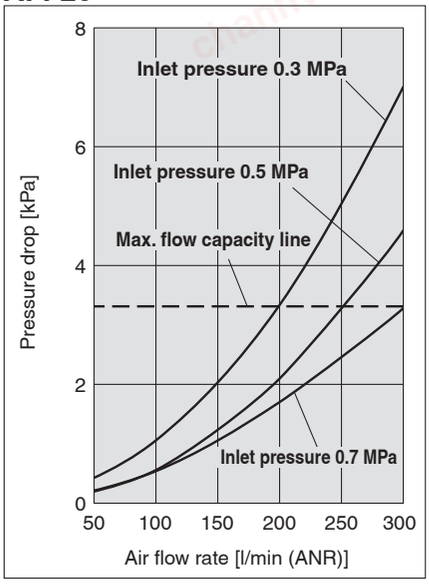

AFF30

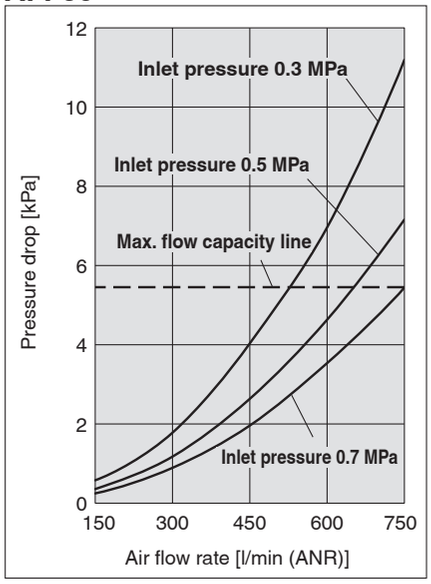

AFF40

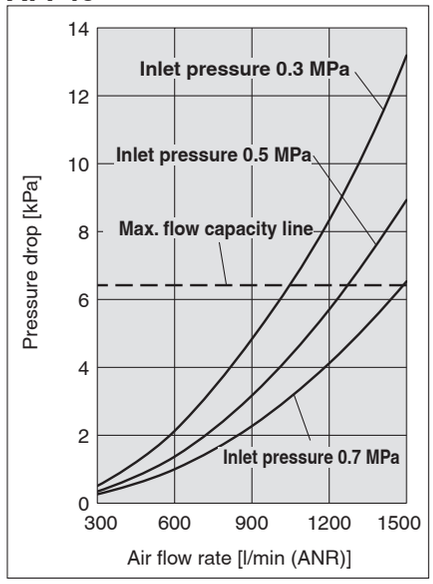

AFF50

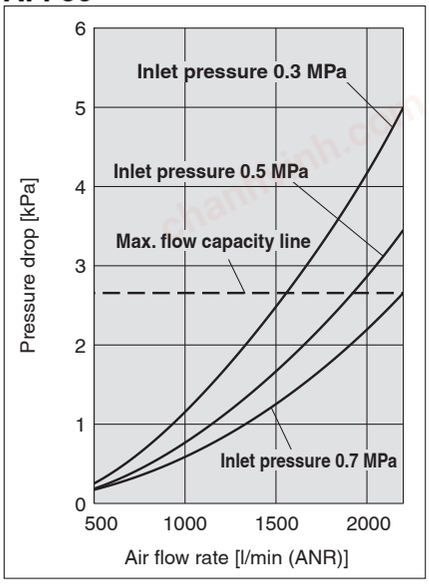

AFF60

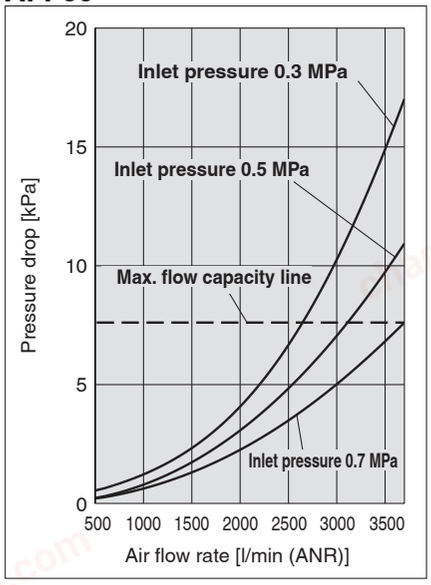

chanhvinh.com

Mist Separator AM Series

Standard Specifications

Model			AM20	AM30	AM40	AM50	AM60
Fluid			Compressed air				
Ambient and fluid temperatures		°C	-5 to 60 (No freezing)				
Proof pressure		MPa	1.5				
Max. operating pressure		MPa	1.0				
Min. operating pressure		MPa	0.05				
Auto drain minimum operating pressure	(N.C.)	MPa	0.1	0.15			
	(N.O.)	MPa	—	0.1			
Nominal filtration rating[*1]		μm	0.1 (Filtration efficiency: 99 %)				
Oil mist concentration on the outlet side[*2, *3]		mg/m³	1 (≈ 0.8 ppm) or less				
Compressed air purity class[*4]		—	ISO 8573-1:2010 [2 : 7 : 3][*5]				
Max. flow capacity[*6]		l/min (ANR)	300	750	1500	2200	3700
Port size		—	1/8, 1/4	1/4, 3/8	1/4, 3/8, 1/2	3/4, 1	1
Weight		kg	0.19	0.39	0.79	1.23	1.46
Bowl material			Polycarbonate			Stainless steel	
Bowl guard			Semi-standard (Steel)	Standard (Polycarbonate)		—	
Drain capacity		cm³	8	25	45	100	

∗1 For the following conditions in accordance with [Measurement: ISO 8573-4:2001, Test method ISO 12500-3:2009 compliant] in addition to the conditions above
- · When the air flow capacity, inlet pressure, and the amount of solid or liquid particles on the filter inlet side are stable
- · When a new element is used

∗2 For the following conditions in accordance with [Measurement: ISO 8573-2:2007, Test method ISO 12500-1:2007 compliant] in addition to the conditions above
- · Oil mist concentration on the filter inlet side = 10 mg/m³
- · When the air flow capacity, inlet pressure, and the oil mist concentration on the filter inlet side are stable
- · When a new element is used

∗3 The bowl seal and other O-rings are slightly lubricated.

∗4 The compressed air purity class is indicated based on ISO 8573-1:2010 Compressed air – Part 1: Contaminants and purity classes.
For details on this standard, refer to page 31.

∗5 The compressed air quality class on the inlet side is [4 : 7 : 4].

∗6 Inlet pressure: 0.7 MPa
Flow at 20 °C, atmospheric pressure, and 65 % of the relative humidity

chanhvinh.com

Mist Separator AM Series

Flow Rate Characteristics (Representative values)

* Compressed air over the max. flow capacity line in the table below may not meet the specifications of the product.

AM20

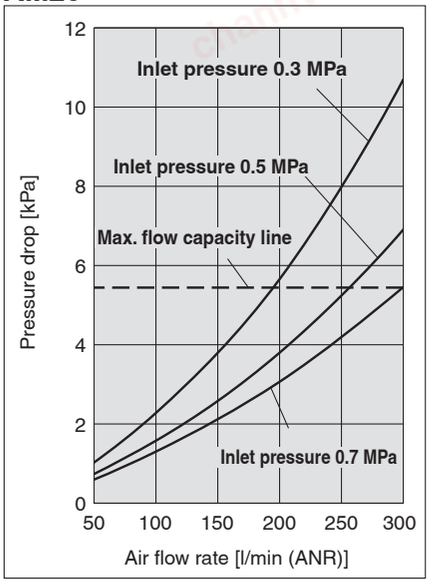

AM30

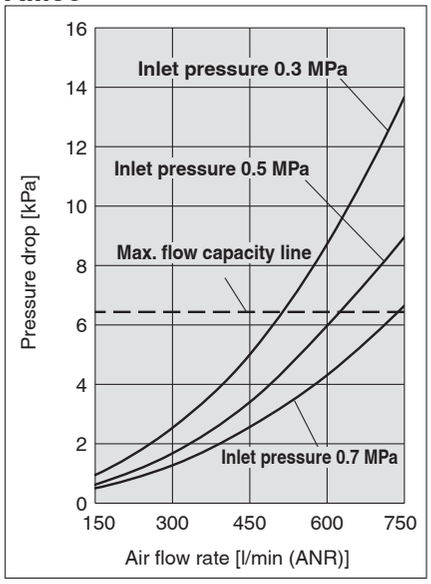

AM40

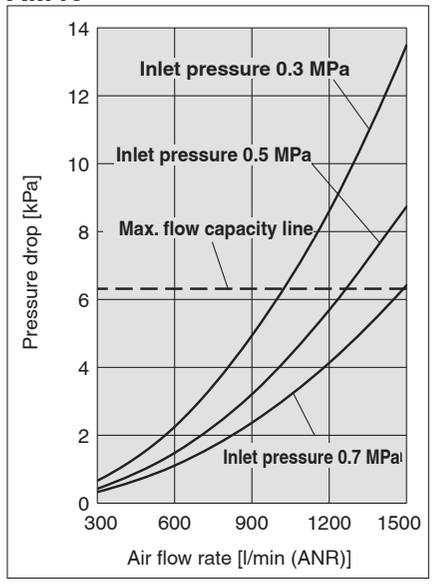

AM50

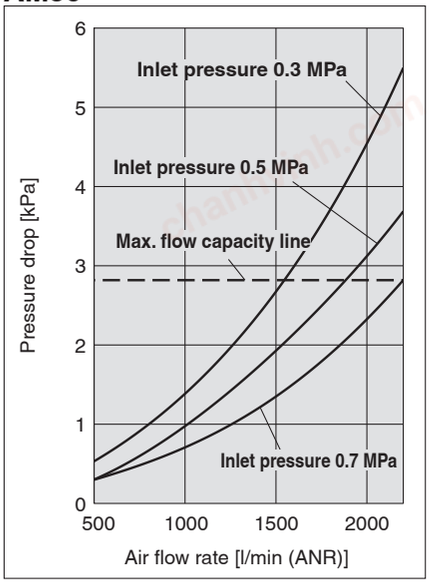

AM60

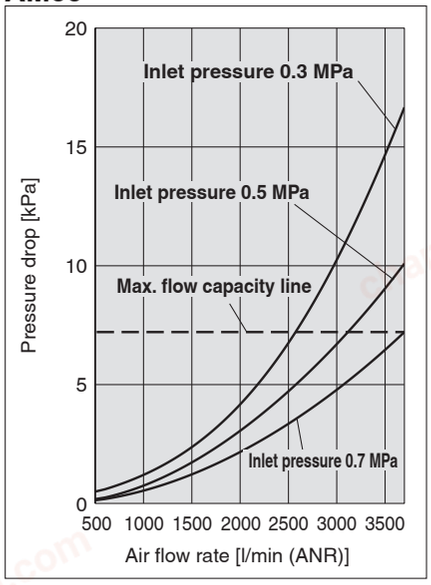

chanhvinh.com

Micro Mist Separator AMD Series

Standard Specifications

Model			AMD20	AMD30	AMD40	AMD50	AMD60
Fluid			Compressed air				
Ambient and fluid temperatures		°C	-5 to 60 (No freezing)				
Proof pressure		MPa	1.5				
Max. operating pressure		MPa	1.0				
Min. operating pressure		MPa	0.05				
Auto drain minimum operating pressure	(N.C.)	MPa	0.1	0.15			
	(N.O.)	MPa	—	0.1			
Nominal filtration rating∗1		μm	0.01 (Filtration efficiency: 99.9 %)				
Oil mist concentration on the outlet side∗2, ∗3		mg/m³	0.1 (≈ 0.08 ppm) or less∗4				
Compressed air purity class∗5		—	ISO 8573-1:2010 [1 : 7 : 2]∗6				
Max. flow capacity∗7		l/min (ANR)	300	750	1500	2200	3700
Port size		—	1/8, 1/4	1/4, 3/8	1/4, 3/8, 1/2	3/4, 1	1
Weight		kg	0.19	0.39	0.79	1.23	1.46
Bowl material			Polycarbonate			Stainless steel	
Bowl guard			Semi-standard (Steel)	Standard (Polycarbonate)		—	
Drain capacity		cm³	8	25	45	100	

∗1 For the following conditions in accordance with [Measurement: ISO 8573-4:2001, Test method ISO 12500-3:2009 compliant] in addition to the conditions above
- When the air flow capacity, inlet pressure, and the amount of solid or liquid particles on the filter inlet side are stable
- When a new element is used

∗2 For the following conditions in accordance with [Measurement: ISO 8573-2:2007, Test method ISO 12500-1:2007 compliant] in addition to the conditions above
- Oil mist concentration on the filter inlet side = 1 mg/m³
- When the air flow capacity, inlet pressure, and the oil mist concentration on the filter inlet side are stable
- When a new element is used

∗3 The bowl seal and other O-rings are slightly lubricated.

∗4 0.01 (≈ 0.008 ppm) or less in the initial state

∗5 The compressed air purity class is indicated based on ISO 8573-1:2010 Compressed air – Part 1: Contaminants and purity classes. For details on this standard, refer to page 31.

∗6 The compressed air quality class on the inlet side is [2 : 7 : 3].

∗7 Inlet pressure: 0.7 MPa
Flow at 20 °C, atmospheric pressure, and 65 % of the relative humidity

chanhvinh.com

Micro Mist Separator AMD Series

Flow Rate Characteristics (Representative values)

∗ Compressed air over the max. flow capacity line in the table below may not meet the specifications of the product.

AMD20

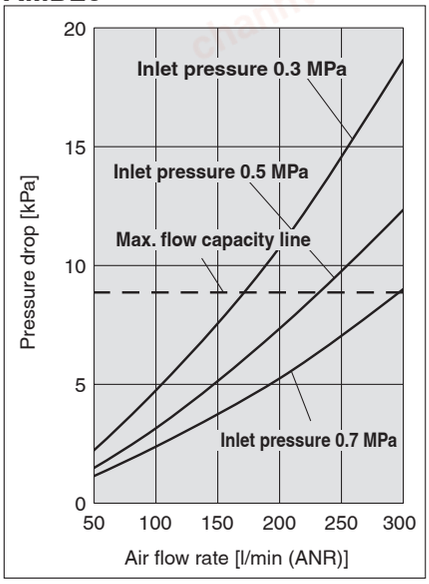

AMD30

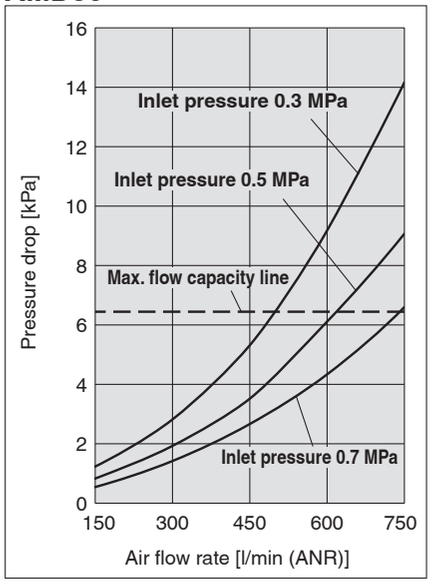

AMD40

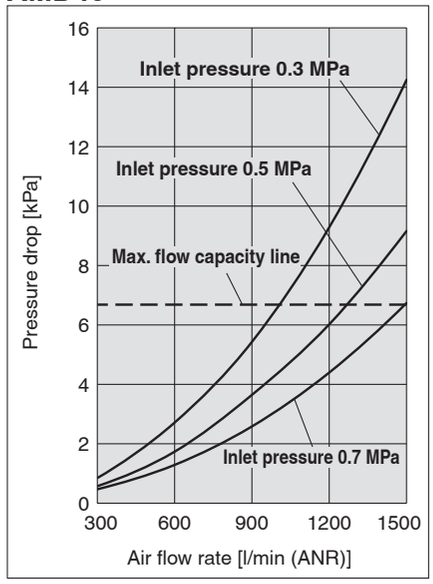

AMD50

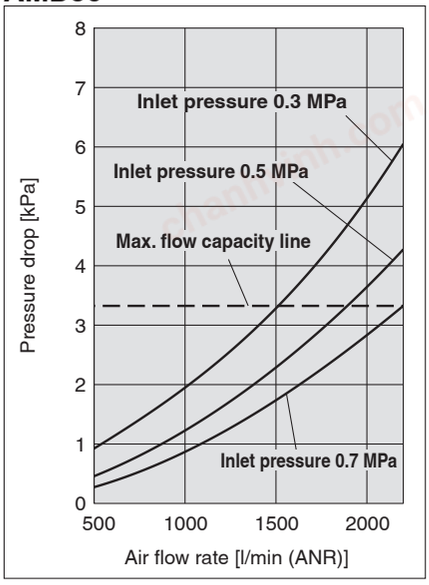

AMD60

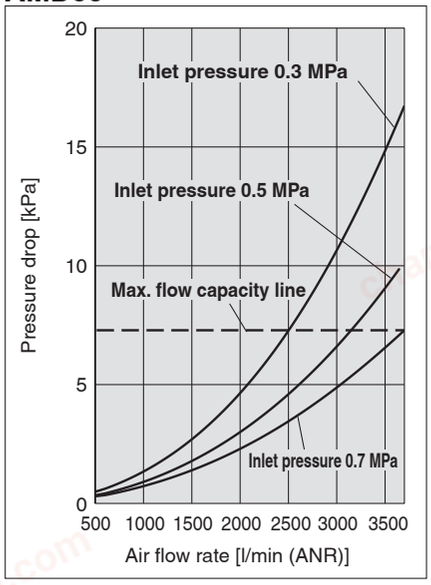

chanhvinh.com

AFF/AM/AMD Series

Construction: AFF, AM, AMD

Size 20 to 40

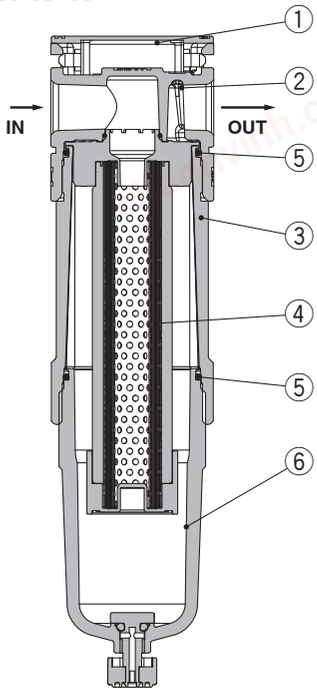

Component Parts

No.	Description	Material
1	**Body cover**	Resin
2	**Body**	Aluminium die-cast
3	**Joint**	Aluminium die-cast

Replacement Parts

No.	Description		Part number		
			20	**30**	**40**
4	**Element**	**AFF**	AFF24P-060AS	AFF34P-060AS	AFF44P-060AS
		AM	AM24P-060AS	AM34P-060AS	AM44P-060AS
		AMD	AMD24P-060AS	AMD34P-060AS	AMD44P-060AS
5	**Bowl seal**		C2SFP-260S	C32FP-260S	C42FP-260S
6	**Bowl assembly**		Refer to “Bowl Assembly/Part Nos.”		

∗ When it is time to replace the element, refer to the maintenance instructions in the specific product precautions (page 34).

Size 50/60

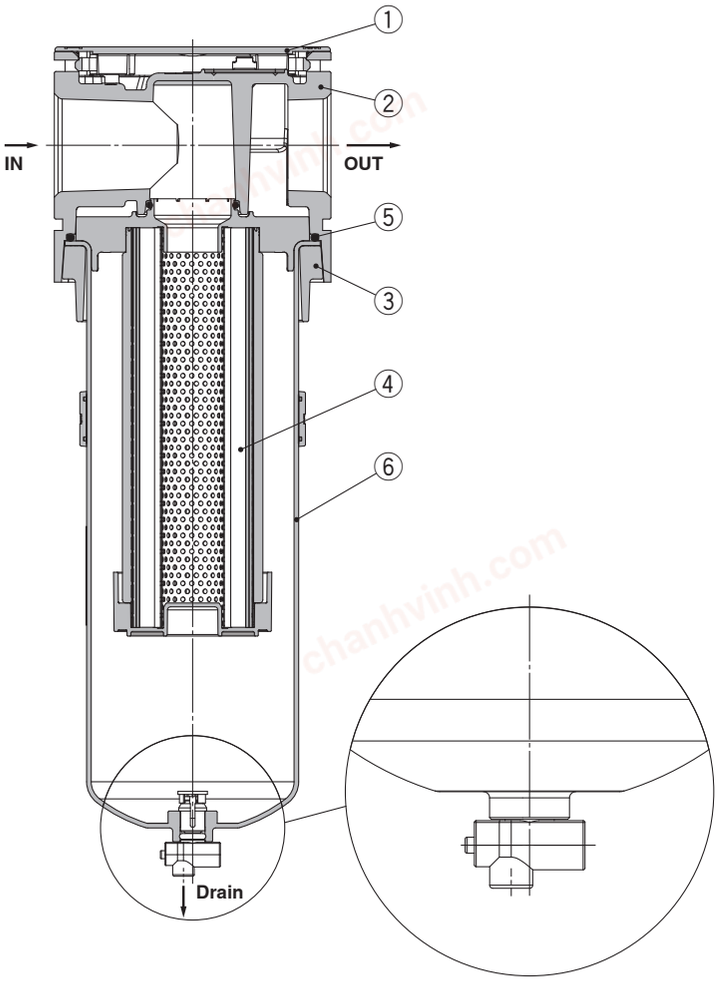

Component Parts

No.	Description	Material
1	**Body cover**	Resin
2	**Body**	Aluminium die-cast
3	**Flange**	Aluminium die-cast

Replacement Parts

No.	Description		Part number	
			50	**60**
4	**Element**	**AFF**	AFF54P-060AS	AFF64P-060AS
		AM	AM54P-060AS	AM64P-060AS
		AMD	AMD54P-060AS	AMD64P-060AS
5	**Bowl seal**		AM54P-160S	
6	**Bowl assembly**		Refer to “Bowl Assembly/Part Nos.”	

chanhvinh.com

Bowl Assembly/Part Nos.

Bowl material	Drain discharge mechanism	Drain port	Other	Model				
				20	**30**	**40**	**50**	**60**
Polycarbonate, Stainless steel	Manual	With drain cock	—	C2SF-D	—	—	AM54P-120AS	AM64P-120AS
			With bowl guard	C2SF-C-D	C3SF-D	C4SF-D	—	—
		Drain cock with barb fitting	With bowl guard	—	C3SF-W-D	C4SF-W-D	AM54P-120AS-W	AM64P-120AS-W
		With drain guide (without valve function)	—	C2SF□-J-D	—	—	AM54P-□120AS-J	AM64P-□120AS-J
			With bowl guard	C2SF□-CJ-D	C3SF□-J-D	C4SF□-J-D	—	—
	Automatic (Auto drain)	Normally closed (N.C.)	—	AD27-D	—	—	AM54P-□120AS-C	AM64P-□120AS-C
			With bowl guard	AD27-C-D	AD37□-D	AD47□-D	—	—
		Normally open (N.O.)	—	—	—	—	AM54P-□120AS-D	AM64P-□120AS-D
			With bowl guard	—	AD38□-D	AD48□-D	—	—
Nylon	Manual	With drain cock	—	C2SF-6-A	—	—	—	—
			With bowl guard	C2SF-6C-A	C3SF-6-D	C4SF-6-D	—	—
		Drain cock with barb fitting	With bowl guard	—	C3SF-6W-D	C4SF-6W-D	—	—
		With drain guide (without valve function)	—	C2SF□-6J-A	—	—	—	—
			With bowl guard	C2SF□-6CJ-A	C3SF□-6J-D	C4SF□-6J-D	—	—
	Automatic (Auto drain)	Normally closed (N.C.)	—	AD27-6-A	—	—	—	—
			With bowl guard	AD27-6C-A	AD37□-6-D	AD47□-6-D	—	—
		Normally open (N.O.)	With bowl guard	—	AD38□-6-D	AD48□-6-D	—	—
Metal	Manual	With drain cock	—	C2SF-2-A	C3SF-2-A	C4SF-2-A	—	—
			With level gauge	—	C3LF-8-A	C4LF-8-A	—	—
		With drain guide (without valve function)	—	C2SF□-2J-A	C3SF□-2J-A	C4SF□-2J-A	—	—
			With level gauge	—	C3LF□-8J-A	C4LF□-8J-A	—	—
	Automatic (Auto drain)	Normally closed (N.C.)	—	AD27-2-A	AD37□-2-A	AD47□-2-A	—	—
			With level gauge	—	AD37□-8-A	AD47□-8-A	—	—
		Normally open (N.O.)	—	—	AD38□-2-A	AD48□-2-A	—	—
			With level gauge	—	AD38□-8-A	AD48□-8-A	—	—

* The bowl assembly for sizes 20 to 40 comes with a bowl seal. The bowl assembly for sizes 50 and 60 comes with a flange and a bowl seal.
* The □ in the bowl assembly part numbers is for indicating the pipe thread type (applicable tubing for the auto drain). No indication is necessary for an Rc thread; however, indicate "N" for an NPT thread, and "F" for a G thread. (For auto drain, —: Ø 10, N: Ø 3/8") Please contact SMC separately for psi and °F unit display specifications.

Option/Part Nos.

Description	Part number			
	20	**30**	**40**	**50, 60**
Bracket assembly	AF24P-070AS	AF34P-070AS	AF44P-070AS	AF54P-070AS
Auto drain	Refer to "Bowl Assembly/Part Nos."			

* The assembly consists of an A and B bracket and 2 mounting screws.

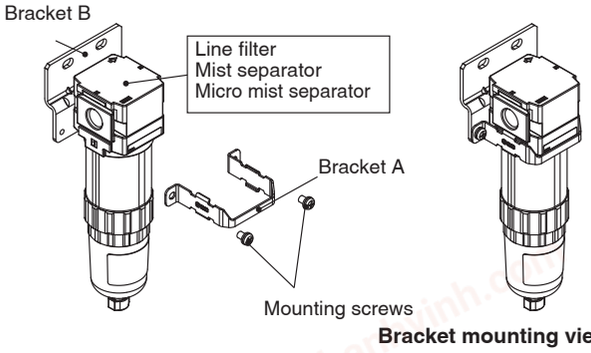

Bracket mounting view

chanhvinh.com

AFF/AM/AMD Series

Dimensions

AFF/AM/AMD20

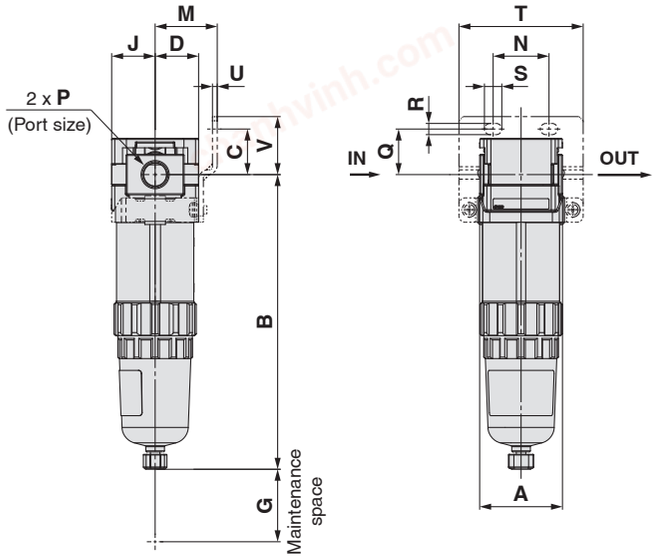

AFF/AM/AMD30
AFF/AM/AMD40

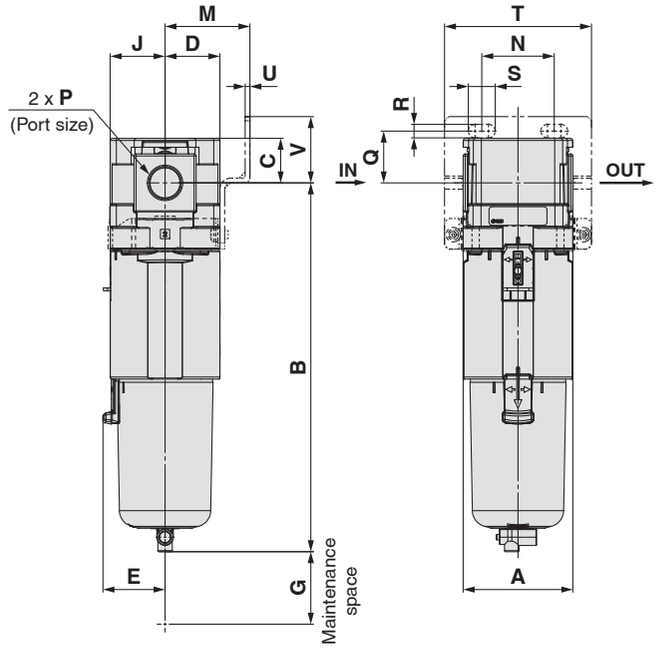

AFF/AM/AMD50
AFF/AM/AMD60

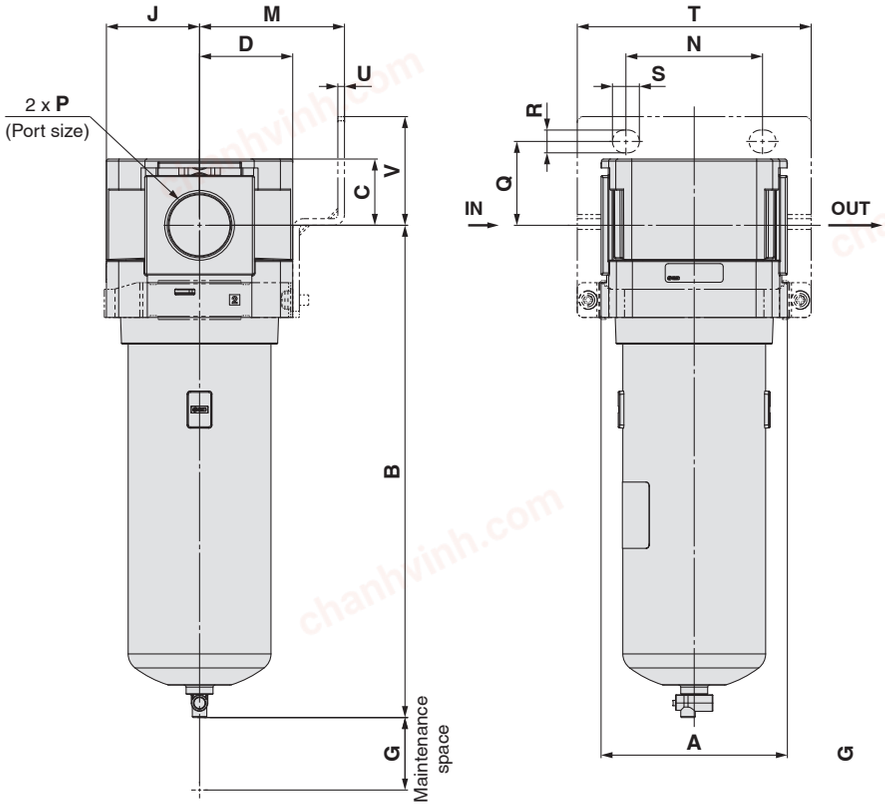

chanhvinh.com

Dimensions

Applicable model	Optional specifications	Semi-standard			
	With auto drain	PC/PA bowl*1 Stainless steel bowl*2		Metal bowl*1	
		Drain cock with barb fitting	With drain guide	With drain cock	With drain guide
AFF/AM/AMD20	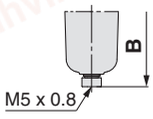		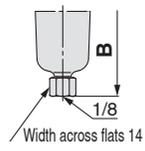	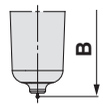	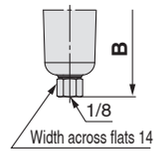
AFF/AM/AMD30 AFF/AM/AMD40 AFF/AM/AMD50 AFF/AM/AMD60	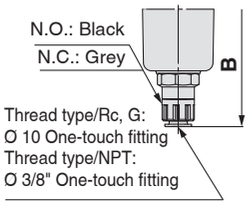	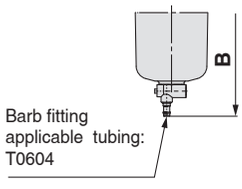	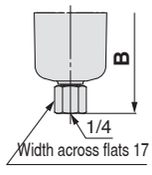	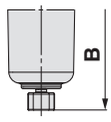	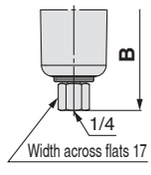

Applicable model	Semi-standard			
	Metal bowl with level gauge*1		Element service indicator	With clogging switch
	With drain cock	With drain guide		
AFF/AM/AMD20			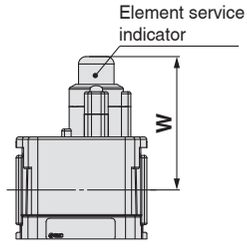	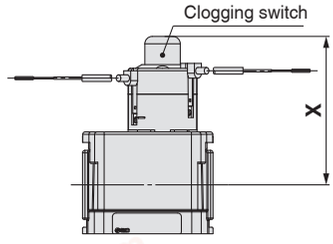
AFF/AM/AMD30 AFF/AM/AMD40 AFF/AM/AMD50 AFF/AM/AMD60	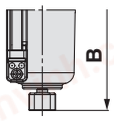	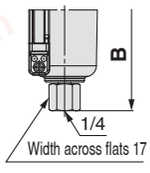		

*1 Available for sizes 20 to 40
*2 Available for sizes 50 and 60

Model	Standard specifications								Optional specifications								
									Bracket mount								With auto drain
	P	A	B	C	D	E	G	J	M	N	Q	R	S	T	U	V	B
AFF20-D/AM20-D/AMD20-D	1/8, 1/4	40	142.3	17.5	21	—	25	21	30	27	22	5.4	8.4	60	2.3	28	159.6
AFF30-D/AM30-D/AMD30-D	1/4, 3/8	53	178.1	21.5	26.5	30	35	26.5	41	35	25	6.5	13	71	2.3	32	219.8
AFF40-D/AM40-D/AMD40-D	1/4, 3/8, 1/2	70	223.5	25.5	35.5	38.4	40	35.5	50	52	30	8.5	12.5	88	2.3	39	263.3
AFF50-D/AM50-D/AMD50-D	3/4, 1	90	237.7	32	45	—	30	45	70	66	40.5	11	13	113	3.2	52.5	259.2
AFF60-D/AM60-D/AMD60-D	1	90	314.8	32	45	—	30	45	70	66	40.5	11	13	113	3.2	52.5	336.3

Model	Semi-standard specifications							
	PC/PA bowl*1 Stainless steel bowl*2		Metal bowl*1		Metal bowl with level gauge*1		Element service indicator	With clogging switch
	With barb fitting	With drain guide	With drain cock	With drain guide	With drain cock	With drain guide		
	B	B	B	B	B	B	W	X
AFF20-D/AM20-D/AMD20-D	—	146.1	142.1	148.6	—	—	50.6	56.6
AFF30-D/AM30-D/AMD30-D	186.6	184.9	180.6	185.1	200.6	205.1	54.3	60.3
AFF40-D/AM40-D/AMD40-D	232	230.3	225.9	230.4	245.9	250.4	58.3	64.3
AFF50-D/AM50-D/AMD50-D	246.2	244.5	—	—	—	—	64.3	70.3
AFF60-D/AM60-D/AMD60-D	323.3	321.6	—	—	—	—	64.3	70.3

*1 Available for sizes 20 to 40
*2 Available for sizes 50 and 60

chanhvinh.com

chanhvinh.com
chanhvinh.com
chanhvinh.com
chanhvinh.com
chanhvinh.com
chanhvinh.com

chanhvinh.com

Compressed Air Preparation Filter

Activated Carbon Filter

AMK Series

RoHS



Symbol



How to Order

AMK ❶ **30** ❷ **–F** ❸ **03** ❹ **B** ❺ **–** ❻ **–D**

· Option/Semi-standard: Select one each for **a** to **d**.
· Option/Semi-standard symbol: When more than one specification is required, indicate in alphanumeric order.
Example) AMK30-N03B-6RZ-D

			Symbol	Description	❷ Body size 20	30	40	50	60
❶	Filter type		**AMK**	Activated carbon filter	●	●	●	●	●
			+						
❸	Thread type		**—**	Rc	●	●	●	●	●
			N	NPT	●	●	●	●	●
			F	G	●	●	●	●	●
			+						
❹	Port size		**01**	1/8	●	—	—	—	—
			02	1/4	●	●	●	—	—
			03	3/8	—	●	●	—	—
			04	1/2	—	—	●	—	—
			06	3/4	—	—	—	●	—
			10	1	—	—	—	●	●
			+						
❺	Option	**a** Mounting	**—**	Without mounting option	●	●	●	●	●
			B∗1	With bracket	●	●	●	●	●
			+						
❻	Semi-standard	**b** Bowl∗2	**—**	Polycarbonate bowl	●	●	●	—	—
				Stainless steel bowl	—	—	—	●	●
			2	Metal bowl	●	●	●	—	—
			6	Nylon bowl	●	●	●	—	—
			C	With bowl guard	●	—∗3	—∗3	—	—
			6C	With bowl guard (Nylon bowl)	●	—∗4	—∗4	—	—
			+						
		c Flow direction	**—**	Flow direction: Left to right	●	●	●	●	●
			R	Flow direction: Right to left	●	●	●	●	●
			+						
		d Pressure unit	**—**	Name plate and caution plate in SI units: MPa/°C	●	●	●	●	●
			Z∗5	Name plate and caution plate in imperial units: psi/°F	○∗6	○∗6	○∗6	○∗6	○∗6

∗1 A bracket is not assembled and supplied loose at the time of shipment. Including 2 mounting screws.
∗2 Refer to the chemical data on page 32 for chemical resistance of the bowl.
∗3 A bowl guard is provided as standard equipment (polycarbonate).
∗4 A bowl guard is provided as standard equipment (nylon).
∗5 For pipe thread type: NPT
∗6 ○: For pipe thread type: NPT only

chanhvinh.com

Activated Carbon Filter AMK Series

Standard Specifications

Model		AMK20	AMK30	AMK40	AMK50	AMK60
Fluid		Compressed air				
Ambient and fluid temperatures	**°C**	- 5 to 60 (No freezing)				
Proof pressure	**MPa**	1.5				
Max. operating pressure	**MPa**	1.0				
Min. operating pressure	**MPa**	0.05				
Oil concentration on the outlet side∗1, ∗2	**mg/m³**	0.003 (≈ 0.0025 ppm) or less				
Compressed air purity class∗3	**—**	ISO 8573-1: 2010 [1 : 4 : 1]∗4				
Max. flow capacity∗5	**l/min (ANR)**	300	750	1500	2200	3700
Port size	**—**	1/8, 1/4	1/4, 3/8	1/4, 3/8, 1/2	3/4, 1	1
Bowl material		Polycarbonate			Stainless steel	
Bowl guard		Semi-standard (Steel)	Standard (Polycarbonate)		—	
Weight	**kg**	0.19	0.39	0.79	1.25	1.50

∗1 For the following conditions in addition to the conditions above
· When a micro mist separator (AMD series) is installed on the inlet side
· When the air flow capacity, upstream pressure, and oil concentration on the filter inlet side are stable
· When a new element is used
∗2 The bowl seal and other O-rings are slightly lubricated.
∗3 The compressed air purity class is indicated based on ISO 8573-1:2010 Compressed air – Part 1: Contaminants and purity classes.
For details on this standard, refer to page 31.
∗4 The compressed air quality class on the inlet side is [1 : 4 : 2].
∗5 Inlet pressure: 0.7 MPa
Flow at 20 °C, atmospheric pressure, and 65 % of the relative humidity

chanhvinh.com

Activated Carbon Filter AMK Series

Flow Rate Characteristics (Representative values)

∗ Compressed air over the max. flow capacity line in the table below may not meet the specifications of the product.

AMK20

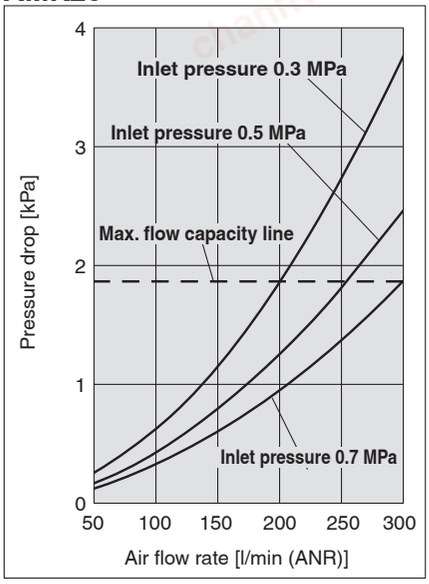

AMK30

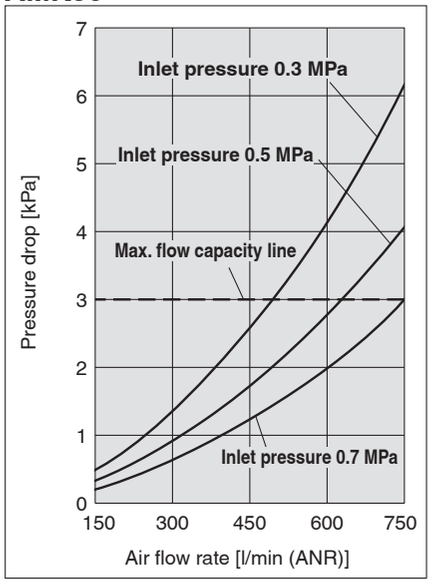

AMK40

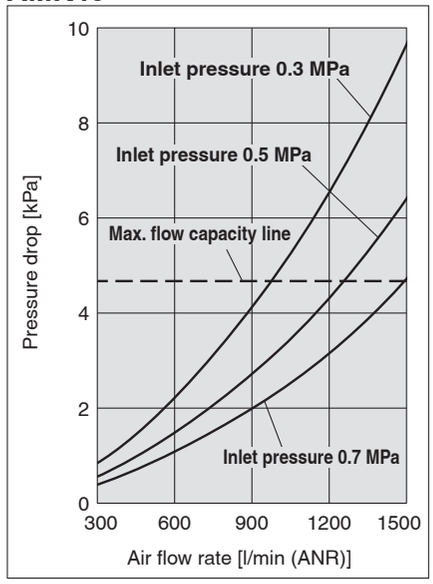

AMK50

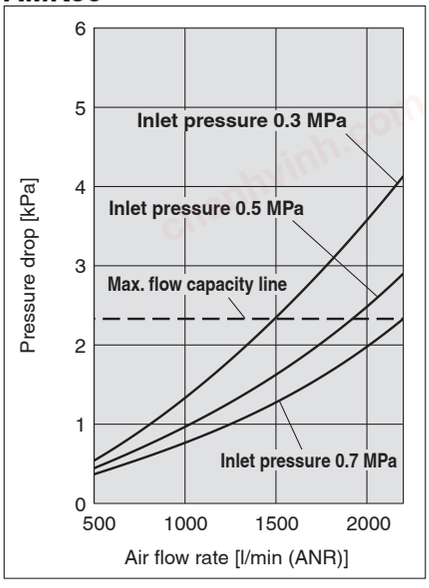

AMK60

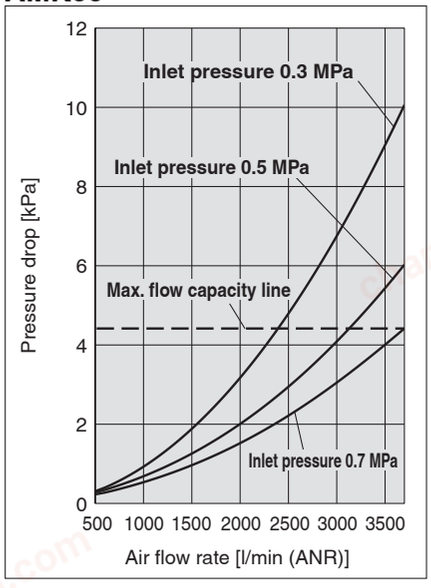

chanhvinh.com

Construction

Size 20 to 40

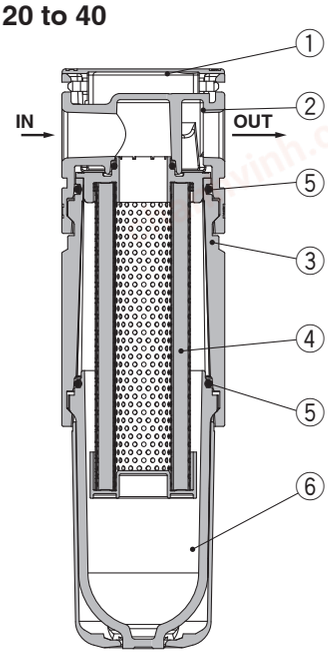

Component Parts

No.	Description	Material
1	**Body cover**	Resin
2	**Body**	Aluminium die-cast
3	**Joint**	Aluminium die-cast

Replacement Parts

No.	Description	Part number		
		AMK20	**AMK30**	**AMK40**
4	**Element**	AMK24P-060AS	AMK34P-060AS	AMK44P-060AS
5	**Bowl seal**	C2SFP-260S	C32FP-260S	C42FP-260S
6	**Bowl assembly**	Refer to “Bowl Assembly/Part Nos.”		

∗ When it is time to replace the element, refer to the maintenance instructions in the specific product precautions (page 34).

Size 50/60

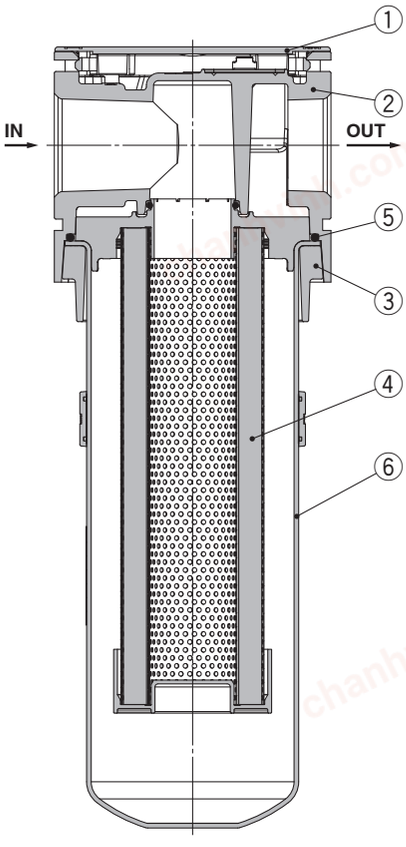

Component Parts

No.	Description	Material
1	**Body cover**	Resin
2	**Body**	Aluminium die-cast
3	**Flange**	Aluminium die-cast

Replacement Parts

No.	Description	Part number	
		50	**60**
4	**Element**	AMK54P-060AS	AMK64P-060AS
5	**Bowl seal**	AM54P-160S	
6	**Bowl assembly**	Refer to “Bowl Assembly/Part Nos.”	

chanhvinh.com

Bowl Assembly/Part Nos.

Bowl material	Other	Model				
		AMK20	**AMK30**	**AMK40**	**AMK50**	**AMK60**
Polycarbonate, Stainless steel	—	C2SF-D-X401	C3SK-D	C4SK-D	AMK54P-120AS	AMK64P-120AS
	With bowl guard	C2SK-C-D	—	—	—	—
Nylon	—	C2SF-6-A-X401	C3SK-6-D	C4SK-6-D	—	—
	With bowl guard	C2SK-6C-D	—	—	—	—
Metal	—	C2SF-2-A-X401	C3SF-2-A-X401	C4SF-2-A-X401	—	—

∗ The bowl assembly for sizes 20 to 40 comes with a bowl seal. The bowl assembly for sizes 50 and 60 comes with a flange and a bowl seal. Please contact SMC separately for psi and °F unit display specifications.

Option/Part Nos.

Description	Part number			
	AMK20	**AMK30**	**AMK40**	**AMK50, 60**
Bracket assembly	AF24P-070AS	AF34P-070AS	AF44P-070AS	AF54P-070AS

∗ The assembly consists of an A and B bracket and 2 mounting screws.

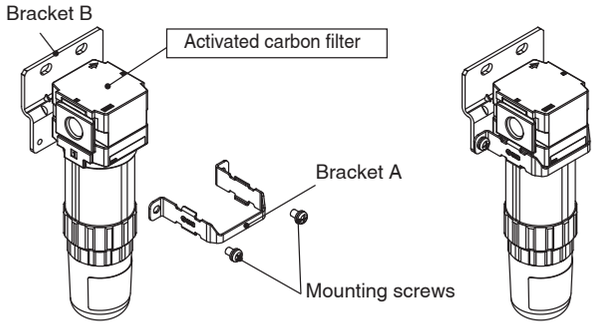

Bracket mounting view

chanhvinh.com

AMK Series

Dimensions

AMK20

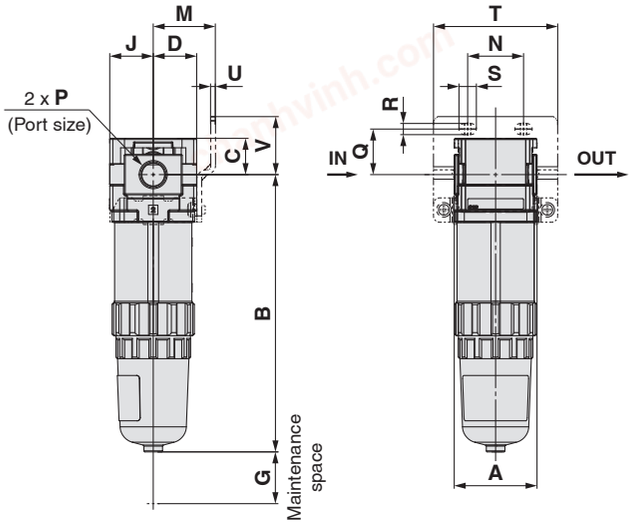

AMK30
AMK40

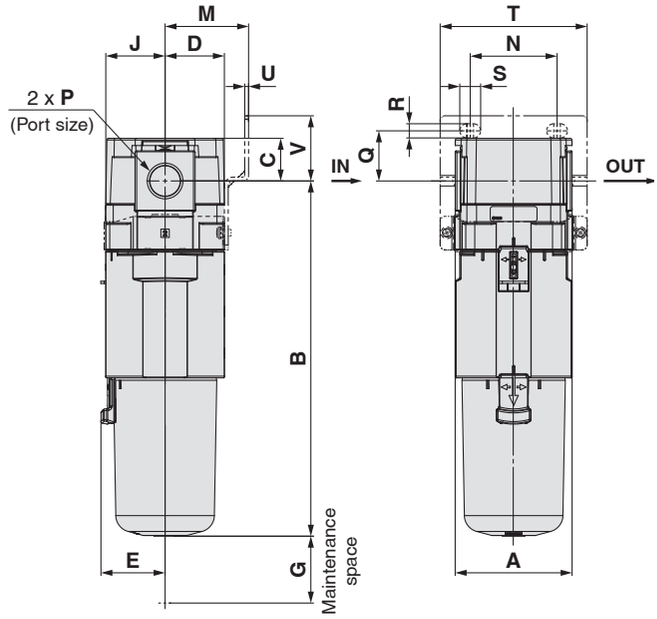

AMK50
AMK60

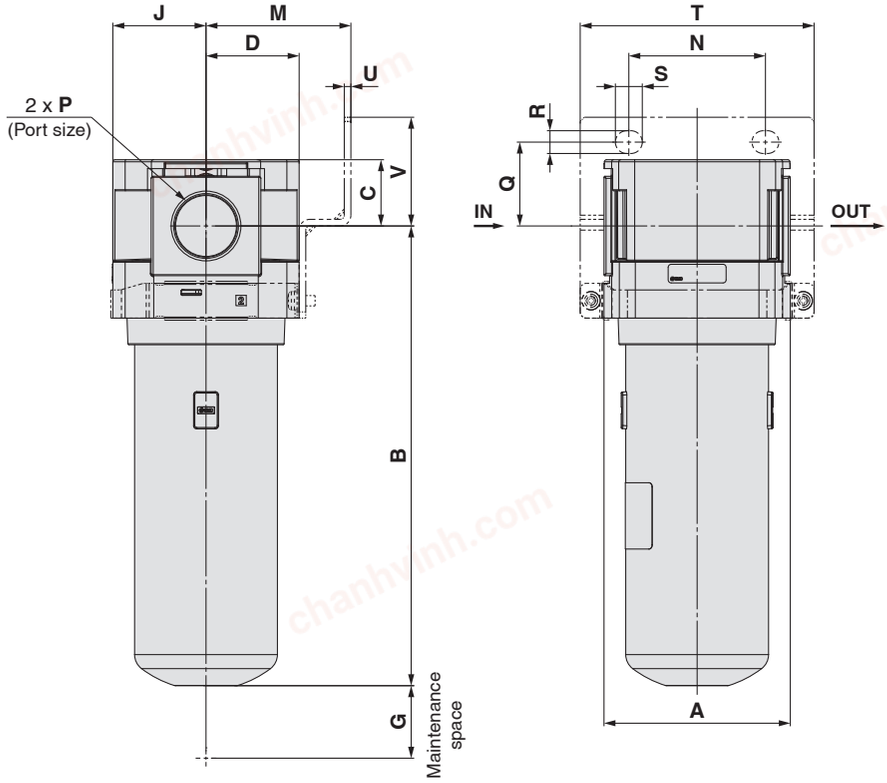

chanhvinh.com

Dimensions

Applicable model	Semi-standard Metal bowl
AMK20-D	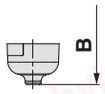
AMK30-D **AMK40-D**	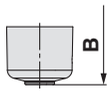

Model	Standard specifications								Optional specifications Bracket mount							
	P	**A**	**B**	**C**	**D**	**E**	**G**	**J**	**M**	**N**	**Q**	**R**	**S**	**T**	**U**	**V**
AMK20-D	1/8, 1/4	40	133.9	17.5	21	—	25	21	30	27	22	5.4	8.4	60	2.3	28
AMK30-D	1/4, 3/8	53	167	21.5	26.5	30	35	26.5	41	35	25	6.5	13	71	2.3	32
AMK40-D	1/4, 3/8, 1/2	70	212.5	25.5	35.5	38.4	40	35.5	50	52	30	8.5	12.5	88	2.3	39
AMK50-D	3/4, 1	90	222	32	45	—	30	45	70	66	40.5	11	13	113	3.2	52.5
AMK60-D	1	90	299.1	32	45	—	30	45	70	66	40.5	11	13	113	3.2	52.5

Model	Semi-standard specifications Metal bowl
	B
AMK20-D	139.1
AMK30-D	167
AMK40-D	212.4
AMK50-D	—
AMK60-D	—

chanhvinh.com

AFF/AM/AMD/AMK Series
Modular Connection Example (Dimensions)

Products do not come assembled. They should be ordered separately and assembled by the customer.

For modular connection units (shipped assembled), the simple specials system can be used. For details, refer to page 6.

Combination example ❶

Line Filter AFF30-03-D ——— 1 pc.
Mist Separator AM30-03-D ——— 1 pc.
Spacer with Bracket Y300T-D ——— 1 pc.

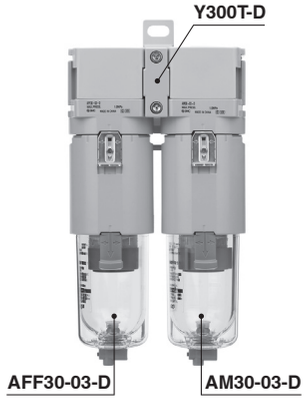

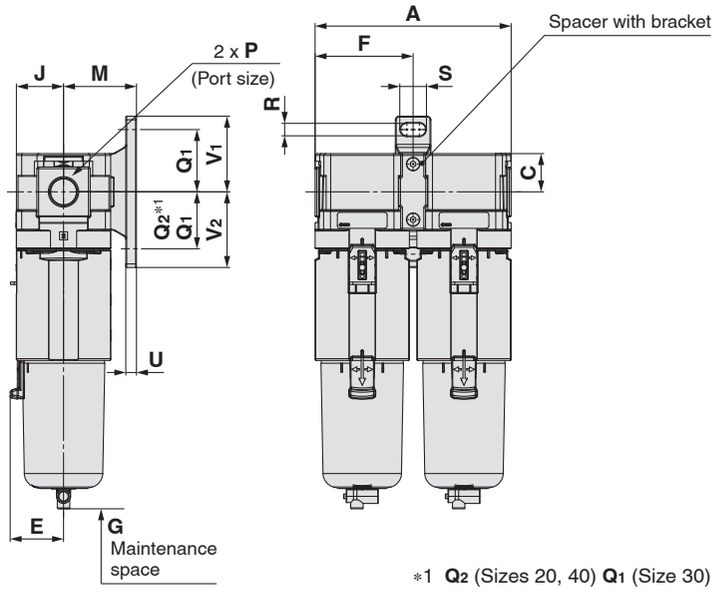

*1 **Q2** (Sizes 20, 40) **Q1** (Size 30)

Combination example ❷

Mist Separator AM30-03-D ——— 1 pc.
Micro Mist Separator AMD30-03-D ——— 1 pc.
Activated Carbon Filter AMK30-03-D ——— 1 pc.
Spacer with Bracket Y300T-D ——— 2 pcs.



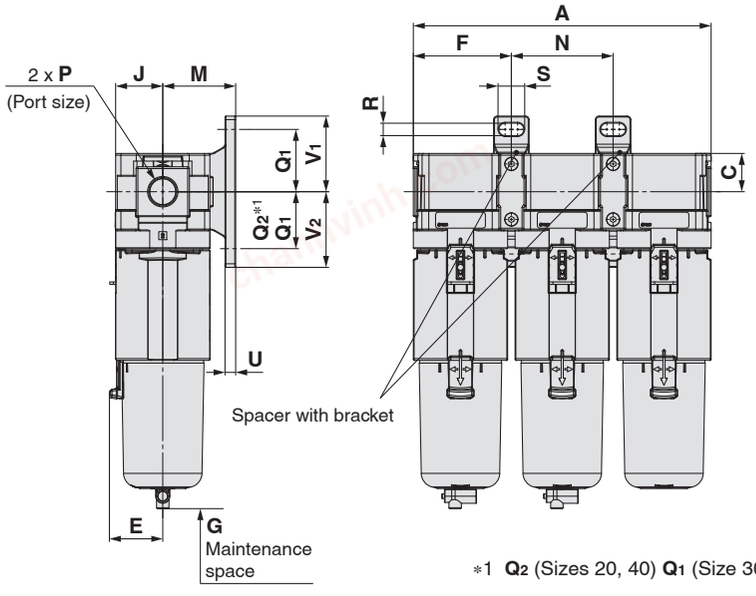

*1 **Q2** (Sizes 20, 40) **Q1** (Size 30)

Model	Number of components	Standard specifications							Optional specifications: Bracket mount								
		P	A	C	E	F	G	J	M	N	Q1	Q2	R	S	U	V1	V2
Size 20	2	1/8, 1/4	83.2	17.5	—	41.6	25	21	30	—	24	33	5.5	11.5	3.5	29	38
	3		126.4							43.2							
Size 30	2	1/4, 3/8	110.2	21.5	30	55.1	35	26.5	41	—	35	—	7	14	6	42.5	42.5
	3		167.4							57.2							
Size 40	2	1/4, 3/8, 1/2	145.2	25.5	38.4	72.6	40	35.5	50	—	40	55	9	18	7	50	65
	3		220.4							75.2							
Size 50	2	3/4, 1	186.2	32	—	93.1	30	45	70	—	50	70	11	20	8	60	80
	3		282.4							96.2							
Size 60	2	1	186.2	32	—	93.1	30	45	70	—	50	70	11	20	8	60	80
	3		282.4							96.2							

chanhvinh.com

Combination example ❸

Line Filter AFF30-03-D ——— 1 pc.
Regulator AR30-03-D ——— 1 pc.
Spacer with Bracket Y300T-D ——— 1 pc.

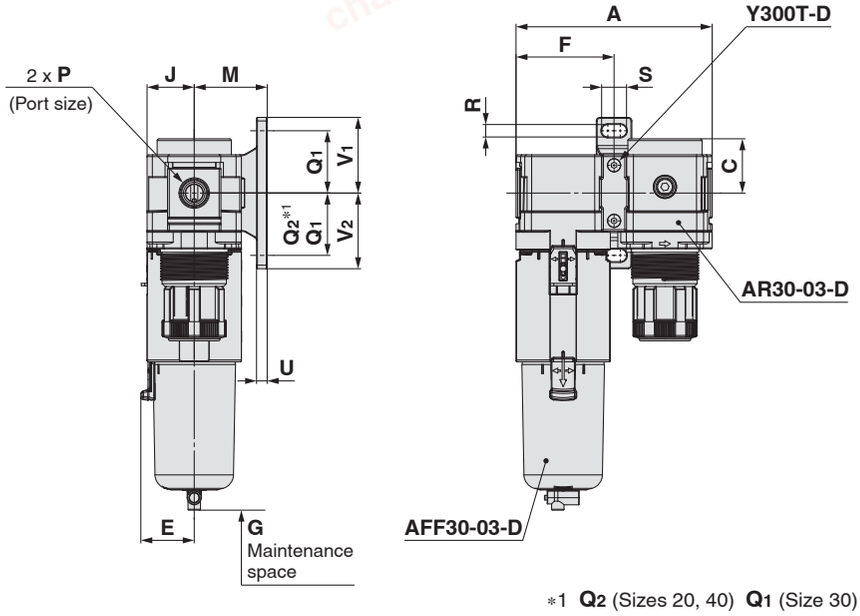

∗1 **Q2** (Sizes 20, 40) **Q1** (Size 30)

Model	Number of components	Standard specifications							Optional specifications Bracket mount							
		P	A	C	E	F	G	J	M	Q1	Q2	R	S	U	V1	V2
Size 20	2	1/8, 1/4	83.2	26.5	—	41.6	25	21	30	24	33	5.5	11.5	3.5	29	38
Size 30	2	1/4, 3/8	110.2	30.5	30	55.1	35	26.5	41	35	—	7	14	6	42.5	42.5
Size 40	2	1/4, 3/8, 1/2	145.2	35.5	38.4	72.6	40	35.5	50	40	55	9	18	7	50	65
Size 50	2	3/4, 1	186.2	43	—	93.1	30	45	70	50	70	11	20	8	60	80
Size 60	2	1	191.2	45	—	93.1	30	45	70	50	70	11	20	8	60	80

Combination example ❹

Pressure Relief 3-port Valve
VHS30-03-D ——— 1 pc.
Filter Regulator AW30K-03-D ——— 1 pc.
Mist Separator AM30-03-D ——— 1 pc.
Micro Mist Separator AMD30-03-D ——— 1 pc.
Spacer with Bracket Y300T-D ——— 3 pcs.

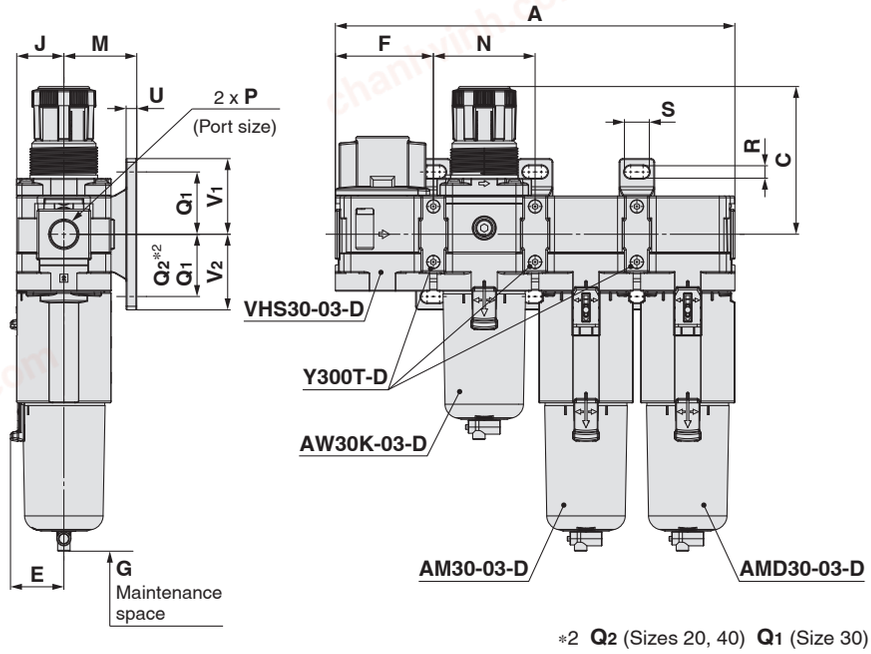

∗2 **Q2** (Sizes 20, 40) **Q1** (Size 30)

Model	Number of components	Standard specifications							Optional specifications Bracket mount								
		P	A	C	E	F	G	J	M	N	Q1	Q2	R	S	U	V1	V2
Size 20	4	1/8, 1/4	169.6	71.8	—	41.6	25	21	30	43.2	24	33	5.5	11.5	3.5	29	38
Size 30	4	1/4, 3/8	224.6	86.5	30	55.1	35	26.5	41	57.2	35	—	7	14	6	42.5	42.5
Size 40	4	1/4, 3/8, 1/2	295.6	91.5	38.4	72.6	40	35.5	50	75.2	40	55	9	18	7	50	65
Size 50	4	3/4, 1	383.6	155	—	93.1	30	45	70	101.2	50	70	11	20	8	60	80

chanhvinh.com

AFF/AM/AMD/AMK Series
Accessories Sold Separately (for Individual Parts)

Spacer / Spacer with Bracket

Y 300 □ – D

❶ ❷

	Symbol	Description	❶ Body size [Applicable size] 200 (AFF20, AM20, AMD20, AMK20)	300 (AFF30, AM30, AMD30, AMK30)	400 (AFF40, AM40, AMD40, AMK40)	600 (AFF50, AFF60, AM50, AM60, AMD50, AMD60, AMK50, AMK60)
❷ Bracket	—	Spacer	●	●	●	●
	T	Spacer with bracket	●	●	●	●

Spacer (Y□-D)



Spacer with bracket (Y□T-D)



Standard Specifications

Fluid	Air
Ambient and fluid temperatures	–5 to 60°C (No freezing)
Proof pressure	1.5 MPa
Max. operating pressure	1.0 MPa

Replacement Parts

Description	Material	Part number Y200-D Y200T-D	Y300-D Y300T-D	Y400-D Y400T-D	Y600-D Y600T-D
Seal	HNBR	Y220P-050S	Y320P-050S	Y420P-050S	Y620P-050S

Dimensions

Spacer

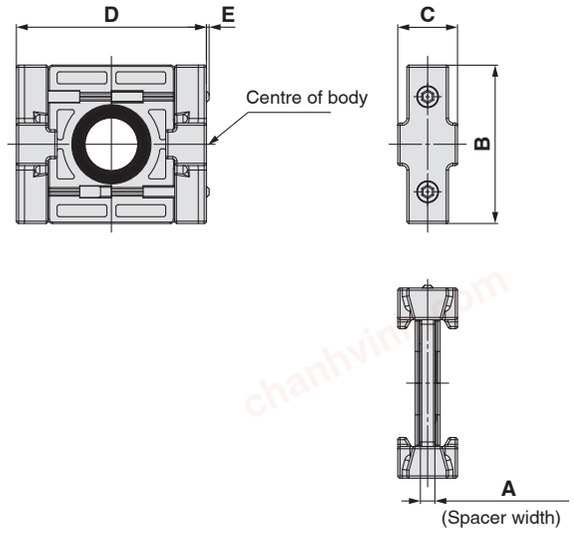

Spacer with bracket

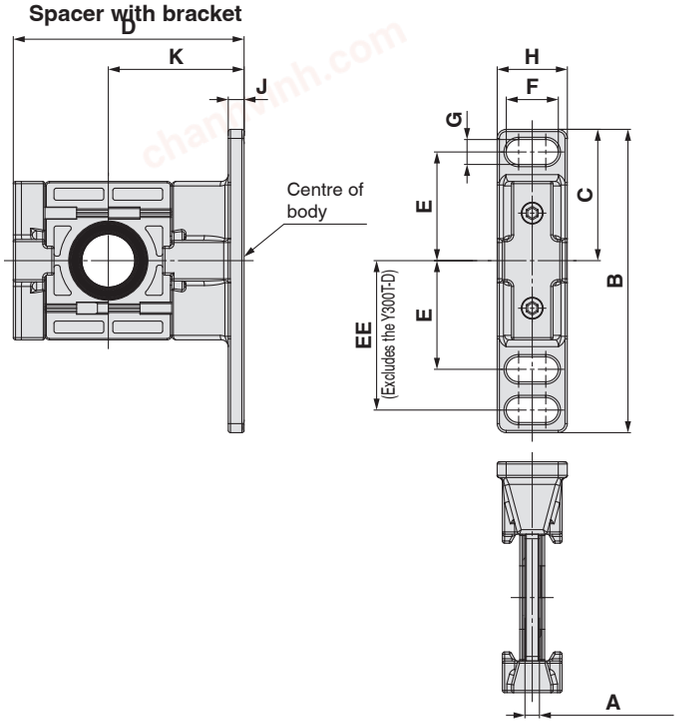

Part no.	A	B	C	D	E	Applicable model
Y200-D	3.2	35	13.2	42	0.6	**AFF/AM/AMD/AMK20**
Y300-D	4.2	43	16.2	53	—	**AFF/AM/AMD/AMK30**
Y400-D	5.2	51	19.2	71	—	**AFF/AM/AMD/AMK40**
Y600-D	6.2	64	27.2	90	—	**AFF/AM/AMD/AMK50 AFF/AM/AMD/AMK60**

Part no.	A	B	C	D	E	EE	F	G	H	J	K	Applicable model
Y200T-D	3.2	67	29	51	24	33	11.5	5.5	15.5	3.5	30	**AFF/AM/AMD/AMK20**
Y300T-D	4.2	85	42.5	67.5	35	—	14	7	20	6	41	**AFF/AM/AMD/AMK30**
Y400T-D	5.2	115	50	85.5	40	55	18	9	26	7	50	**AFF/AM/AMD/AMK40**
Y600T-D	6.2	140	60	115	50	70	20	11	31.2	8	70	**AFF/AM/AMD/AMK50 AFF/AM/AMD/AMK60**

chanhvinh.com

Clogging Switch
Auto Switch Specifications (D-A93VL)

Refer to the SMC website for details on the products conforming to international standards.

Auto switch model	D-A93VL			
Auto switch specifications	Applicable load		Relay, PLC	
	Load voltage		24 VDC	100 VAC
	Load current range and Max. load current∗2		5 to 40 mA∗3	5 to 20 mA
	Internal circuit		∗1	
	Contact protection circuit		None	
	Internal voltage drop		2.7 V or less	
	Indicator light		Red LED illuminates when turned ON.	
	Standards		CE/UKCA marking	
	Leakage current		None	
	Operating time		1.2 ms	
	Impact resistance		300 m/s^2	
	Insulation resistance		50 MΩ or more at 500 VDC Mega	
	Withstand voltage		1000 VAC for 1 min	
	Lead wire length		3 m	
	Weight		30 g	
	Ambient temperature		-10 to 60°C	
	Enclosure		IEC60529 standard IP67	
Oilproof heavy-duty lead wire specifications	Sheath	Outside diameter	Ø 2.7 mm	
	Insulator	Number of cores	2 cores (Brown, Blue)	
		Outside diameter	Ø 0.96 mm	
	Conductor	Effective area	0.18 mm^2	
		Strand diameter	Ø 0.08 mm	
	Lead wire min. bending radius		17 mm	

∗1 Refer to the following circuit diagram for the internal circuit.
∗2 Under 5 mA, the strength of the indicator light is poor. In some cases, visibility of the indicator light will not be possible when the output signal is less than 2.5 mA. However, there is no problem in terms of contact output when the output signal exceeds 1 mA.
∗3 When using at 12 VDC, the auto switch operates normally, but the load may not operate depending on the specifications of the load. For details, refer to the description of the internal voltage drop of the auto switch in the “Reed Auto Switch/Common Precautions” section in the **Web Catalogue**.

2-wire (Reed switch)

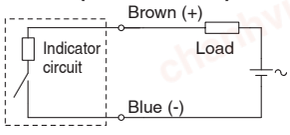

chanhvinh.com

International Standard ISO 8573-1:2010
Compressed Air Purity Classes

Compressed air is used in a variety of manufacturing processes. In this age, compressed air with a high degree of purity is becoming increasingly necessary.
For this reason, it is necessary to remove contaminants from systems which supply compressed air and to secure the quality. The standard which stipulates the class according to the quantities of contaminants in compressed air is ISO 8573-1.

[Outline]
Stipulates the purity class of contaminants (particles, water, oil) mixed in with the compressed air

[Scope]
Can be used in various places in compressed air systems

[Terms and Definitions]
- Purity class: An index assigned for each classification obtained by dividing the concentration of each contaminant into ranges
- Particle: Small discrete mass of solid or liquid matter
- Humidity and liquid water: Water vapor (gas), Water droplets
- Oil: Liquid oil, Oil mist, Oil vapor

[Purity Classes]

Class	Particles				Humidity and liquid water		Oil
	Maximum number of particles per cubic meter as a function of particle size d [μm]			Mass concentration Cp	Pressure dew point	Concentration of liquid water Cw	Concentration of total oil
	0.1 < d ≤ 0.5	0.5 < d ≤ 1.0	1.0 < d ≤ 5.0	[mg/m³]	[°C]	[g/m³]	[mg/m³]
0	As specified by the equipment user or supplier and more stringent than class 1						
1	≤ 20000	≤ 400	≤ 10	—	≤ –70	—	≤ 0.01
2	≤ 400000	≤ 6000	≤ 100	—	≤ –40	—	≤ 0.1
3	—	≤ 90000	≤ 1000	—	≤ –20	—	≤ 1
4	—	—	≤ 10000	—	≤ +3	—	≤ 5
5	—	—	≤ 100000	—	≤ +7	—	—
6	—	—	—	0 < Cp ≤ 5	≤ +10	—	—
7	—	—	—	5 < Cp ≤ 10	—	Cw ≤ 0.5	—
8	—	—	—	—	—	0.5 < Cw ≤ 5	—
9	—	—	—	—	—	5 < Cw ≤ 10	—
x	—	—	—	Cp > 10	—	Cw > 10	> 5

[How to Perform a Test to Check the Performance]
ISO 12500, which sets out the test method to be used in order to check the filter performance for each of the three kinds of contaminants, is indicated below.
- Particle: ISO 12500-3:2009
- Liquid water: ISO 12500-4:2009
- Oil: ISO 12500-1:2007

* Measured using a dedicated evaluation system which has been certified according to ISO 12500-□ and also by a third party (Certified)

[Purity Class Designation Example]

ISO 8573-1:2010 [4 : 6 : 2]

Oil class

2	Concentration of total oil ≤ 0.1 mg/m³

Particle class

4	1.0 μm < d ≤ Particles of 5.0 μm ≤ 10000 particles/m³

Humidity and liquid water class

6	Pressure dew point ≤ +10°C

List of systems which conform to the degree of purity required for compressed air

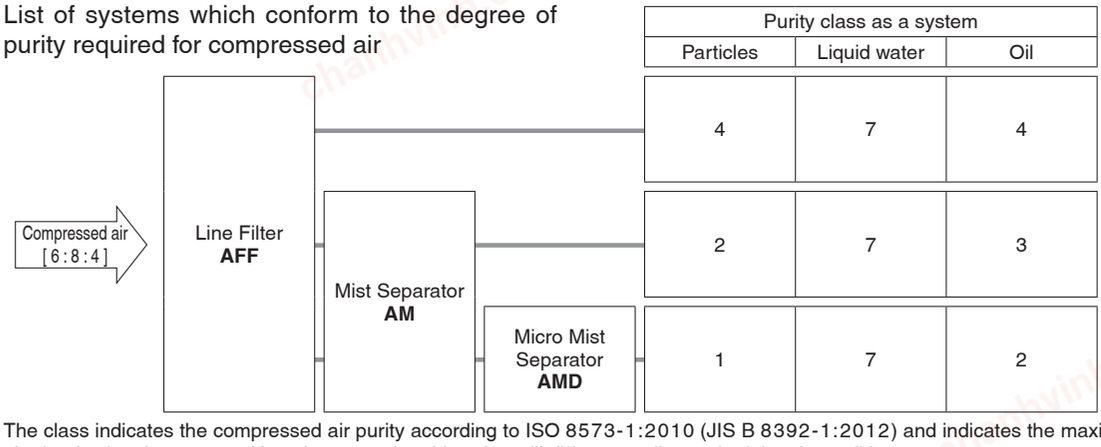

The class indicates the compressed air purity according to ISO 8573-1:2010 (JIS B 8392-1:2012) and indicates the maximum purity class which can be obtained using that system. Note, however, that this value will differ according to the inlet air conditions.

chanhvinh.com

AFF/AM/AMD/AMK Series
Specific Product Precautions 1

Be sure to read this before handling the products. Refer to the back cover for safety instructions. For air preparation equipment precautions, refer to the "Handling Precautions for SMC Products" and the "Operation Manual" on the SMC website: https://www.smc.eu

Design

⚠Warning

1. Resin is used for some of the external parts such as the bowl (Material: polycarbonate).

Organic solvents including thinner, acetone, alcohol, and ethylene chloride; chemicals including sulfuric acid, nitric acid, and hydrochloric acid; cutting oil, synthetic oil, ester-based compressor oil, alkali, kerosene, gasoline, and lock thread adhesive are harmful. Do not use the product where these are present.

Effects of organic solvents and chemicals on the equipment. Shown below is the chemical data of substances which cause degradation for reference.

Type	Chemical name	Application examples	Material	
			Polycarbonate	Nylon
Acid	Hydrochloric acid Sulfuric acid Phosphoric acid Acetic acid Chromic acid	Acid washing liquid for metals	△	×
Alkaline	Sodium hydroxide (Caustic soda) Potash Calcium hydroxide (Slack lime) Ammonia water Sodium carbonate	Degreasing of metals Industrial salts Water-soluble cutting oil	×	○
Inorganic salts	Sodium sulfide Potassium nitrate Sodium sulfate	—	×	△
Chlorine solvents	Carbon tetrachloride Chloroform Ethylene chloride Methylene chloride	Cleansing liquid for metals Printing ink Dilution	×	△
Aromatic series	Benzene Toluene Paint thinner	Coatings Dry cleaning	×	△
Ketone	Acetone Methyl ethyl ketone Cyclohexane	Photographic film Dry cleaning Textile industries	×	×
Alcohol	Ethyl alcohol IPA Methyl alcohol	Antifreeze Adhesives	△	×
Oil	Gasoline Kerosene	—	×	○
Ester	Phthalic acid dimethyl Phthalic acid diethyl	Synthetic oil Anti-rust additives	×	○
Ether	Methyl ether Ethyl ether	Brake oil additives	×	○
Amino	Methyl amino	Cutting oil Brake oil additives Rubber accelerator	×	×
Others	Thread-lock fluid Seawater Leak tester	—	×	△

○: Essentially safe △: Some effects may occur. ×: Effects will occur.

When the above factors are present, or there is some doubt, use a metal bowl for safety.

∗ The display window material is nylon.

Design

⚠Warning

2. Applications in which the difference between the inlet and outlet pressure exceeds 0.1 MPa must be avoided. Failure to do so may result in element breakage.

3. For air blow applications, prevent airborne particles from the operating environment from entering into the compressed air stream. Foreign matter may adhere to workpieces during air blow as a result.

4. If air equipment is installed on the outlet side of the product, particles may be generated from the equipment and thus the required cleanliness may not be obtained. Please consider installing air equipment on the inlet side of the product.

⚠Caution

1. The activated carbon filter (AMK series) adsorbs the oil vapor contained in compressed air and removes the odor derived from it, but it does not remove all odor.

Selection

⚠Warning

1. Select a model so that the max. discharge (instantaneous) flow rate value does not exceed the max. flow capacity.

2. Use the N.O. type auto drain under the following conditions to avoid a malfunction.

Output of compressor: 0.75 kW or more

Discharged flow rate: 100 l/min (ANR) or more

If multiple auto drains are to be used, confirm whether the compressor has a sufficient capacity by multiplying the above capacity by the number of auto drains to be used. { For example, in order to use 2 auto drains, the compressor needs a capacity of 1.5 kW [200 l/min (ANR)] or more. } Set the operating pressure at 0.1 MPa or more.

3. Use the N.C. type auto drain under the following conditions to avoid a malfunction.

Operating pressure for size 20: 0.1 MPa or more

Operating pressure for sizes 30 to 60: 0.15 MPa or more

Mounting

⚠Warning

1. Connect the product according to the " 1 "(IN) and " 2 "(OUT) indications or the arrows for air direction. Incorrect connection may result in a malfunction.

2. Install with adequate space for maintenance beneath the product. Refer to the dimensions of each part for the necessary amount of space.

3. Install vertically so that the drain outlet turns downward. Using with the drain outlet turned horizontal or upward may result in a malfunction.

chanhvinh.com

AFF/AM/AMD/AMK Series
Specific Product Precautions 2

Be sure to read this before handling the products. Refer to the back cover for safety instructions. For air preparation equipment precautions, refer to the "Handling Precautions for SMC Products" and the "Operation Manual" on the SMC website: https://www.smc.eu

Mounting

⚠Warning

4. When using the product with a clogging switch, note the following points.

(1) Refer to the figure below to check the position of the auto switch.

For 1 switch (For symbol "M")	For 2 switches (For symbol "MM")
Only on the right side when looking at the nameplate	**Both the right and left** sides when looking at the nameplate

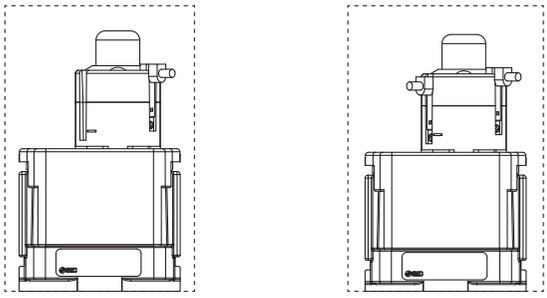

(2) Do not hit the auto switch with a tool or allow it to receive any other impacts. Doing so may cause damage.

(3) Do not attach or detach the auto switch equipped with a clogging switch. Otherwise, the detection accuracy of the clogging switch may be reduced. In addition, note that an auto switch with an element service indicator cannot be installed in combination.

(4) Do not place magnetic objects near the product. Otherwise, a machine failure may result.

Piping

⚠Warning

1. Tighten the 2 holding screws on the spacer with bracket or spacer evenly.

Tighten them to the recommended tightening torque.

Insufficient tightening torque may result in loosening or sealing failure. Excessive tightening torque may damage the thread, etc.

Recommended Torque Unit: N·m

Applicable model	AFF20 AM20 AMD20 AMK20	AFF30 AM30 AMD30 AMK30	AFF40 AM40 AMD40 AMK40	AFF50/AFF60 AM50/AM60 AMD50/AMD60 AMK50/AMK60
Spacer with bracket part number	Y200T-D	Y300T-D	Y400T-D	Y600T-D
Spacer part number	Y200-D	Y300-D	Y400-D	Y600-D
Torque	0.36 ±0.036	1.2 ±0.05	1.2 ±0.05	2.0 ±0.1

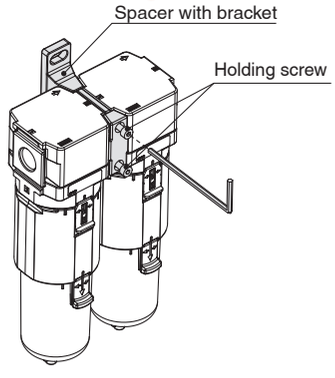

Piping

⚠Warning

2. Piping load and moment

Avoid any torsional or bending moments other than those caused by the equipment's own weight as failure to do so may result in damage.

Support external piping separately. If moment application is unavoidable during operation, the moment should be lower than the max. moment shown below.

Piping materials without flexibility, such as steel tube piping, are prone to being affected by excess moment loads or vibrations from the piping side. Use flexible tubing in between to avoid such effects.

Unit: N·m

Applicable model	AFF20 AM20 AMD20 AMK20	AFF30 AM30 AMD30 AMK30	AFF40 AM40 AMD40 AMK40	AFF50/AFF60 AM50/AM60 AMD50/AMD60 AMK50/AMK60
Max. moment (**M**)	14.5	16	19.5	45

Max. moment (**M**) = Length (**L**) x Load (**F**)

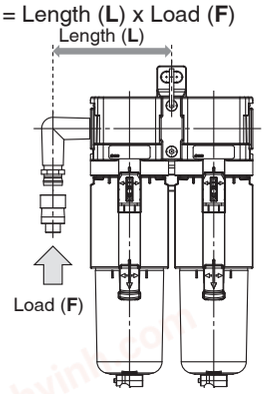

3. Connect piping/fittings using the recommended torque while holding the female thread side tightly.

Insufficient tightening torque can result in loose piping or sealing failure. Over tightening may break the thread. If the female side is not held while tightening, excessive force will be applied to the bracket directly, resulting in breakage.

Recommended Tightening Torque Unit: N·m

Connection thread	1/8	1/4	3/8	1/2	3/4	1
Torque	7 to 9	12 to 14	22 to 24	28 to 30	28 to 30	36 to 38

4. When an SMC One-touch fitting is used, refer to the operation manual for the One-touch fitting.

chanhvinh.com

AFF/AM/AMD/AMK Series
Specific Product Precautions 3

Be sure to read this before handling the products. Refer to the back cover for safety instructions. For air preparation equipment precautions, refer to the "Handling Precautions for SMC Products" and the "Operation Manual" on the SMC website: https://www.smc.eu

Air Supply

⚠Warning

1. Air containing too much moisture may deteriorate product performance. Install a refrigerated air dryer or an aftercooler on the inlet side of the product.

⚠Caution

1. Install a micro mist separator (AMD series) on the inlet side of the activated carbon filter (AMK series) to avoid performance degradation.

Maintenance

⚠Warning

1. Replace the element according to the replacement timing explained below. Failure to do so may result in element breakage.

a. AFF20 to 60-D, AM20 to 60-D, and AMD20 to 60-D

Within 2 years from the start of use or prior to a product pressure drop (difference in outlet pressure in relation to the inlet pressure) of 0.1 MPa

b. AMK20 to 60-D

1 year from the start of use or before the service life reaches 2 0 0 0 hours (The replacement timing of the element varies depending on the operating conditions. Even before the above replacement timing is reached, if an oil smell is emitted from the outlet, replace the element periodically thereafter.)

⚠Caution

1. For the N.C. type auto drain, when there is no pressure, condensate, which is not enough to activate the auto drain mechanism, will remain in the bowl. It is recommended that the residual condensate be released manually at the end of each work day.

2. For models with an element service indicator or clogging switch, as the element becomes more clogged, the indicator will display an increasing level of red. Be sure to replace the element before the level of red reaches the top of the indicator.

Maintenance

⚠Caution

3. For the product equipped with a clogging switch, replace the element even if it has been used for 2 years or less when the installed auto switch (SW) is detected.

Element status when auto switch is detected

Symbol	No. of SW	Installation of SW	When SW is detected
-M	SW 1	No	—
	SW 2	Yes	Warning
-MM	SW 1	Yes	Caution
	SW 2	Yes	Warning

Caution: Replacement is recommended because the element is clogged.

Warning: The element is clogged, which may result in the destruction of the element. Be sure to replace the element.

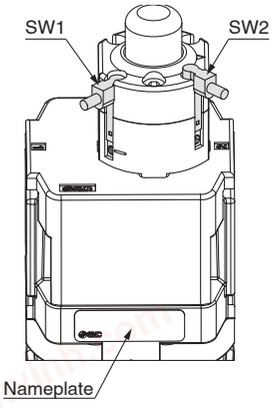

4. Since the clogging switch does not have an output holding mechanism, note that the output will be OFF when there is no air flow in the element (when the equipment is stopped, etc.).

chanhvinh.com

⚠ Safety Instructions

These safety instructions are intended to prevent hazardous situations and/or equipment damage. These instructions indicate the level of potential hazard with the labels of **"Caution," "Warning"** or **"Danger."** They are all important notes for safety and must be followed in addition to International Standards (ISO/IEC) [1], and other safety regulations.

⚠ **Danger:**	**Danger** indicates a hazard with a high level of risk which, if not avoided, will result in death or serious injury.
⚠ **Warning:**	**Warning** indicates a hazard with a medium level of risk which, if not avoided, could result in death or serious injury.
⚠ **Caution:**	**Caution** indicates a hazard with a low level of risk which, if not avoided, could result in minor or moderate injury.

1) ISO 4414: Pneumatic fluid power – General rules and safety requirements for systems and their components.
ISO 4413: Hydraulic fluid power – General rules and safety requirements for systems and their components.
IEC 60204-1: Safety of machinery – Electrical equipment of machines. (Part 1: General requirements)
ISO 10218-1: Robots and robotic devices - Safety requirements for industrial robots - Part 1: Robots.
etc.

⚠ Warning

1. The compatibility of the product is the responsibility of the person who designs the equipment or decides its specifications.
Since the product specified here is used under various operating conditions, its compatibility with specific equipment must be decided by the person who designs the equipment or decides its specifications based on necessary analysis and test results. The expected performance and safety assurance of the equipment will be the responsibility of the person who has determined its compatibility with the product. This person should also continuously review all specifications of the product referring to its latest catalogue information, with a view to giving due consideration to any possibility of equipment failure when configuring the equipment.

2. Only personnel with appropriate training should operate machinery and equipment.
The product specified here may become unsafe if handled incorrectly. The assembly, operation and maintenance of machines or equipment including our products must be performed by an operator who is appropriately trained and experienced.

3. Do not service or attempt to remove product and machinery/equipment until safety is confirmed.
1. The inspection and maintenance of machinery/equipment should only be performed after measures to prevent falling or runaway of the driven objects have been confirmed.
2. When the product is to be removed, confirm that the safety measures as mentioned above are implemented and the power from any appropriate source is cut, and read and understand the specific product precautions of all relevant products carefully.
3. Before machinery/equipment is restarted, take measures to prevent unexpected operation and malfunction.

4. Our products cannot be used beyond their specifications.
Our products are not developed, designed, and manufactured to be used under the following conditions or environments.
Use under such conditions or environments is not covered.
1. Conditions and environments outside of the given specifications, or use outdoors or in a place exposed to direct sunlight.
2. Use for nuclear power, railways, aviation, space equipment, ships, vehicles, military application, equipment affecting human life, body, and property, fuel equipment, entertainment equipment, emergency shut-off circuits, press clutches, brake circuits, safety equipment, etc., and use for applications that do not conform to standard specifications such as catalogues and operation manuals.
3. Use for interlock circuits, except for use with double interlock such as installing a mechanical protection function in case of failure. Please periodically inspect the product to confirm that the product is operating properly.

⚠ Caution

We develop, design, and manufacture our products to be used for automatic control equipment, and provide them for peaceful use in manufacturing industries.
Use in non-manufacturing industries is not covered.
Products we manufacture and sell cannot be used for the purpose of transactions or certification specified in the Measurement Act.
The new Measurement Act prohibits use of any unit other than SI units in Japan.

Limited warranty and Disclaimer/Compliance Requirements

The product used is subject to the following "Limited warranty and Disclaimer" and "Compliance Requirements".Read and accept them before using the product.

Limited warranty and Disclaimer

1. The warranty period of the product is 1 year in service or 1.5 years after the product is delivered, whichever is first. [2] Also, the product may have specified durability, running distance or replacement parts. Please consult your nearest sales branch.
2. For any failure or damage reported within the warranty period which is clearly our responsibility, a replacement product or necessary parts will be provided. This limited warranty applies only to our product independently, and not to any other damage incurred due to the failure of the product.
3. Prior to using SMC products, please read and understand the warranty terms and disclaimers noted in the specified catalogue for the particular products.

2) Vacuum pads are excluded from this 1 year warranty.
A vacuum pad is a consumable part, so it is warranted for a year after it is delivered. Also, even within the warranty period, the wear of a product due to the use of the vacuum pad or failure due to the deterioration of rubber material are not covered by the limited warranty.

Compliance Requirements

1. The use of SMC products with production equipment for the manufacture of weapons of mass destruction (WMD) or any other weapon is strictly prohibited.
2. The exports of SMC products or technology from one country to another are governed by the relevant security laws and regulations of the countries involved in the transaction. Prior to the shipment of a SMC product to another country, assure that all local rules governing that export are known and followed.

chanhvinh.com

Revision History

Edition B	- The AMK series activated carbon filter has been added. - Number of pages has been increased from 16 to 24.	ZO
Edition C	- Sizes 50 and 60 have been added. - An element service indicator has been added. - Number of pages has been increased from 24 to 32.	AQ
Edition D	- A clogging switch has been added. - Number of pages has been increased from 32 to 36.	BW

SMC Corporation (Europe)

Austria	+43 (0)2262622800	www.smc.at	office@smc.at
Belgium	+32 (0)33551464	www.smc.be	info@smc.be
Bulgaria	+359 (0)2807670	www.smc.bg	office@smc.bg
Croatia	+385 (0)13707288	www.smc.hr	office@smc.hr
Czech Republic	+420 541424611	www.smc.cz	office@smc.cz
Denmark	+45 70252900	www.smcdk.com	smc@smcdk.com
Estonia	+372 651 0370	www.smcee.ee	info@smcee.ee
Finland	+358 207513513	www.smc.fi	smcfi@smc.fi
France	+33 (0)164761000	www.smc-france.fr	supportclient@smc-france.fr
Germany	+49 (0)61034020	www.smc.de	info@smc.de
Greece	+30 210 2717265	www.smchellas.gr	sales@smchellas.gr
Hungary	+36 23513000	www.smc.hu	office@smc.hu
Ireland	+353 (0)14039000	www.smcautomation.ie	sales@smcautomation.ie
Italy	+39 03990691	www.smcitalia.it	mailbox@smcitalia.it
Latvia	+371 67817700	www.smc.lv	info@smc.lv
Lithuania	+370 5 2308118	www.smclt.lt	info@smclt.lt
Netherlands	+31 (0)205318888	www.smc.nl	info@smc.nl
Norway	+47 67129020	www.smc-norge.no	post@smc-norge.no
Poland	+48 222119600	www.smc.pl	sales@smc.pl
Portugal	+351 214724500	www.smc.eu	apoioclientept@smc.smces.es
Romania	+40 213205111	www.smcromania.ro	smcromania@smcromania.ro
Russia	+7 (812)3036600	www.smc.eu	sales@smcru.com
Slovakia	+421 (0)413213212	www.smc.sk	office@smc.sk
Slovenia	+386 (0)73885412	www.smc.si	office@smc.si
Spain	+34 945184100	www.smc.eu	post@smc.smces.es
Sweden	+46 (0)86031240	www.smc.nu	smc@smc.nu
Switzerland	+41 (0)523963131	www.smc.ch	info@smc.ch
Turkey	+90 212 489 0 440	www.smcturkey.com.tr	info@smcturkey.com.tr
UK	+44 (0)845 121 5122	www.smc.uk	sales@smc.uk
South Africa	+27 10 900 1233	www.smcza.co.za	zasales@smcza.co.za

Printing BX 00 Printed in Spain

Specifications are subject to change without prior notice and any obligation on the part of the manufacturer