chanhvinh.com

Si826x

5 kV LED Emulator Input, 4.0 A Isolated Gate Drivers

Features

- Pin-compatible, drop-in upgrades for popular high speed opto-coupled gate drivers
- Low power diode emulator simplifies design-in process
- 0.6 and 4.0 Amp peak output drive current
- Rail-to-rail output voltage
- Performance and reliability advantages vs. opto-drivers
  - Resistant to temperature and age
  - 10x lower FIT rate for longer service life
  - 14x tighter part-to-part matching
  - Higher common-mode transient immunity: >50 kV/µs typical
- Robust protection features
  - Multiple UVLO ordering options (5, 8, and 12 V) with hysteresis
- 60 ns propagation delay, independent of input drive current
- Wide V_{DD} range: 6.5 to 30 V
- Up to 5000 V_{RMS} isolation
- 10 kV surge withstand capability
- AEC-Q100 qualified
- Wide operating temperature range
  - –40 to +125 °C
- RoHS-compliant packages
  - SOIC-8 (Narrow body)
  - DIP8 (Gull-wing)
  - SDIP6 (Stretched SO-6)
- Automotive-grade OPNs available
  - AIAG compliant PPAP documentation support
  - IMDS and CAMDS listing support

Applications

- IGBT/ MOSFET gate drives
- Industrial, HEV and renewable energy inverters
- AC, Brushless, and DC motor controls and drives
- Variable speed motor control in consumer white goods
- Isolated switch mode and UPS power supplies

Safety Regulatory Approvals

- UL 1577 recognized
  - Up to 5000 Vrms for 1 minute
- CSA component notice 5A approval
  - IEC 60950-1, 60601-1 (reinforced insulation)
- VDE certification conformity
  - VDE0884-10 (basic/reinforced insulation)
- CQC certification approval
  - GB4943.1

Description

The Si826x isolators are pin-compatible, drop-in upgrades for popular opto-coupled gate drivers, such as 0.6 A ACPL-0302/3020, 2.5 A HCPL-3120/ACPL-3130, HCNW3120/3130, and similar opto-drivers. The devices are ideal for driving power MOSFETs and IGBTs used in a wide variety of inverter and motor control applications. The Si826x isolated gate drivers utilize Skyworks Solutions' proprietary silicon isolation technology, supporting up to 5.0 kV_{RMS} withstand voltage per UL1577 and 10kV surge protection per VDE 0884-10. This technology enables higher-performance, reduced variation with temperature and age, tighter part-to-part matching, and superior common-mode rejection compared to opto-coupled gate drivers. While the input circuit mimics the characteristics of an LED, less drive current is required, resulting in higher efficiency. Propagation delay time is independent of input drive current, resulting in consistently short propagation times, tighter unit-to-unit variation, and greater input circuit design flexibility. As a result, the Si826x series offers longer service life and dramatically higher reliability compared to opto-coupled gate drivers.

Automotive Grade is available for certain part numbers. These products are built using automotive-specific flows at all steps in the manufacturing process to ensure the robustness and low defectivity required for automotive applications.

Pin Assignments:
See page 23

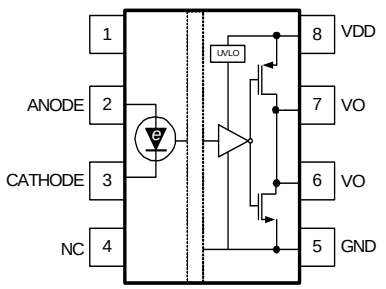

SOIC-8, DIP8
Industry Standard Pinout

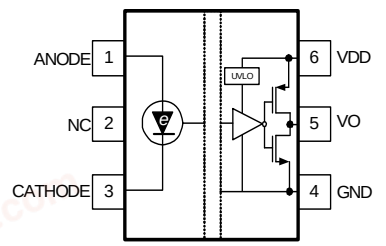

SDIP6
Industry Standard Pinout

Patent pending

chanhvinh.com

Functional Block Diagram

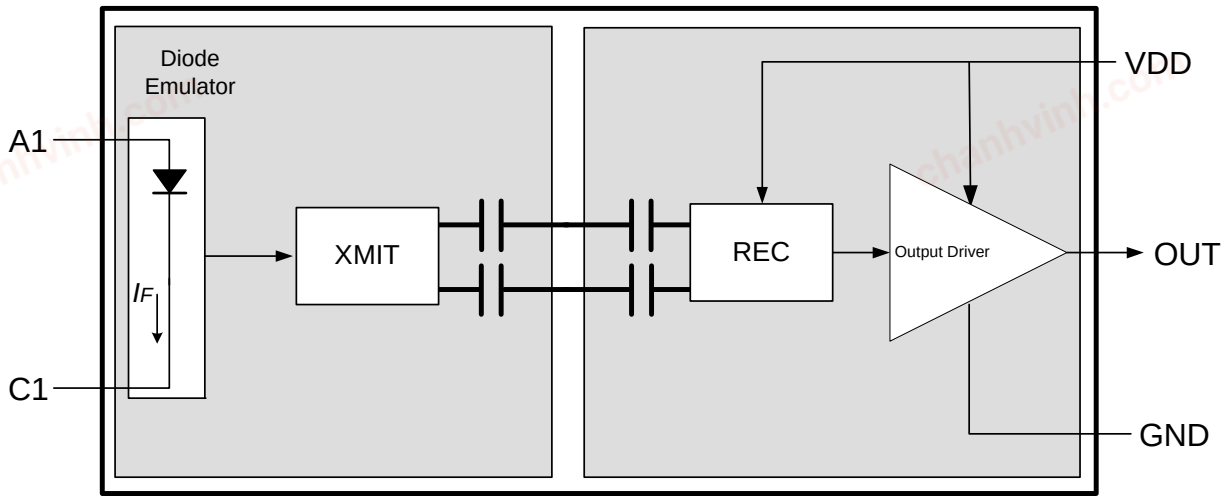

chanhvinh.com

TABLE OF CONTENTS

Section	Page
1. Electrical Specifications	**4**
2. Regulatory Information	**9**
3. Functional Description	**15**
3.1. Theory of Operation	15
4. Technical Description	**16**
4.1. Device Behavior	16
4.2. Device Startup	16
4.3. Under Voltage Lockout (UVLO)	17
5. Applications	**18**
5.1. Input Circuit Design	18
5.2. Output Circuit Design	19
5.3. Layout Considerations	19
5.4. Power Dissipation Considerations	20
6. Pin Descriptions (SOIC-8, DIP8)	**22**
7. Pin Descriptions (SDIP6)	**23**
8. Ordering Guide	**24**
8.1. Automotive Grade OPNs	27
9. Package Outline: 8-Pin Narrow Body SOIC	**28**
10. Land Pattern: 8-Pin Narrow Body SOIC	**29**
11. Package Outline: DIP8	**30**
12. Land Pattern: DIP8	**31**
13. Package Outline: SDIP6	**32**
14. Land Pattern: SDIP6	**34**
15. Top Markings	**35**
15.1. Si826x Top Marking (Narrow Body SOIC)	35
15.2. Top Marking Explanation	35
15.3. Si826x Top Marking (DIP8)	36
15.4. Top Marking Explanation	36
15.5. Si826x Top Marking (SDIP6)	37
15.6. Top Marking Explanation	37
Document Change List	**38**
Contact Information	**39**

chanhvinh.com

1. Electrical Specifications

Table 1. Recommended Operating Conditions

Parameter	Symbol	Min	Typ	Max	Unit
Supply Voltage	V_{DD}	6.5	—	30	V
Input Current	$I_{F(ON)}$ (see Figure 1)	6	—	30	mA
Operating Temperature (Ambient)	T_A	–40	—	125	°C

Table 2. Electrical Characteristics [1]

V_{DD} = 15 V or 30 V, GND = 0 V, I_F = 6 mA, T_A = –40 to +125 °C; typical specs at 25 °C; T_J = –40 to +140 °C

Parameter	Symbol	Test Condition	Min	Typ	Max	Unit
DC Parameters						
Supply Voltage[2]	V_{DD}	(V_{DD} – GND)	6.5	—	30	V
Supply Current (Output High)	I_{DD}	I_F = 10 mA V_{DD} = 15 V V_{DD} = 30 V	 — —	 1.8 2.0	 2.4 2.7	 mA mA
Supply Current (Output Low)	I_{DD}	V_F = 0 V; I_F = 0 mA V_{DD} = 15 V V_{DD} = 30 V	 — —	 1.5 1.7	 2.1 2.4	 mA mA
Input Current Threshold	$I_{F(TH)}$		—	—	3.6	mA
Input Current Hysteresis	I_{HYS}		—	0.34	—	mA
Input Forward Voltage (OFF)	$V_{F(OFF)}$	Measured at ANODE with respect to CATHODE.	—	—	1	V
Input Forward Voltage (ON)	$V_{F(ON)}$	Measured at ANODE with respect to CATHODE.	1.6	—	2.8	V
Input Capacitance	C_I	f = 100 kHz, V_F = 0 V, V_F = 2 V	 — —	 15 15	 — —	pF
Output Resistance High (Source)[3]	R_{OH}	Si826xAxx devices	—	15	—	Ω
		Si826xBxx devices (I_{OH} = -1 A)	—	2.6	5.1	
Output Resistance Low (Sink)[3]	R_{OL}	Si826xAxx devices	—	5	—	
		Si826xBxx devices (I_{OL} = 2 A)	—	0.8	2.0	

Notes:
1. See "8.Ordering Guide" on page 24 for more information.
2. Minimum value of (V_{DD} - GND) decoupling capacitor is 1 µF.
3. Both V_O pins are required to be shorted together for 4.0 A compliance.
4. When performing this test, it is recommended that the DUT be soldered down to the PCB to reduce parasitic inductances, which may cause over-stress conditions due to excessive ringing.
5. Guaranteed by characterization.

chanhvinh.com

Table 2. Electrical Characteristics (Continued)[1]

V_{DD} = 15 V or 30 V, GND = 0 V, I_F = 6 mA, T_A = –40 to +125 °C; typical specs at 25 °C; T_J = –40 to +140 °C

Parameter	Symbol	Test Condition	Min	Typ	Max	Unit
Output High Current (Source)[3,4]	I_{OH}	Si826xAxx devices (I_F = 0), ($t_{PW_IOH} \leq$ 250 ns) (see Figure 3)	—	0.4	—	A
		Si826xBxx devices (I_F = 0), ($t_{PW_IOH} \leq$ 250 ns), ($V_{DD} – V_O$ = 7.5 V) (see Figure 3)	0.5	1.8	—	
Output Low Current (Sink)[3,4]	I_{OL}	Si826xAxx devices (I_F = 10 mA), ($t_{PW_IOL} \leq$ 250 ns) (see Figure 2)	—	0.6	—	A
		Si826xBxx devices (I_F = 10 mA), ($t_{PW_IOL} \leq$ 250 ns), (V_O - GND = 4.2 V) (see Figure 2)	1.2	4.0	—	
High-Level Output Voltage	V_{OH}	Si826xAxx devices (I_{OUT} = –100 mA)	—	V_{DD}– 0.4	—	V
		Si826xBxx devices (I_{OUT} = –100 mA)	V_{DD}– 0.5	V_{DD}– 0.25	—	
		Si826xBxx devices (I_{OUT} = 0 mA), (I_F = 0 mA)	—	V_{DD}	—	
Low-Level Output Voltage	V_{OL}	Si826xAxx devices (I_{OUT} = 100 mA), (I_F = 10 mA)	—	320	—	mV
		Si826xBxx devices (I_{OUT} = 100 mA), (I_F = 10 mA)	—	80	200	
UVLO Threshold + (Si826xxAx mode)	VDD_{UV+}	See Figure 10 on page 17. V_{DD} rising	5	5.6	6.3	V
UVLO Threshold – (Si826xxAx mode)	$VDD_{UV–}$	See Figure 10 on page 17. V_{DD} falling	4.7	5.3	6.0	V

Notes:

1. See "8.Ordering Guide" on page 24 for more information.
2. Minimum value of (V_{DD} - GND) decoupling capacitor is 1 µF.
3. Both V_O pins are required to be shorted together for 4.0 A compliance.
4. When performing this test, it is recommended that the DUT be soldered down to the PCB to reduce parasitic inductances, which may cause over-stress conditions due to excessive ringing.
5. Guaranteed by characterization.

chanhvinh.com

Table 2. Electrical Characteristics (Continued)[1]

V_{DD} = 15 V or 30 V, GND = 0 V, I_F = 6 mA, T_A = –40 to +125 °C; typical specs at 25 °C; T_J = –40 to +140 °C

Parameter	Symbol	Test Condition	Min	Typ	Max	Unit
UVLO lockout hysteresis (Si826xxAx mode)	VDD_{HYS}		—	300	—	mV
UVLO Threshold + (Si826xxBx mode)	VDD_{UV+}	See Figure 11 on page 17. V_{DD} rising	7.5	8.4	9.4	V
UVLO Threshold – (Si826xxBx mode)	VDD_{UV-}	See Figure 11 on page 17. V_{DD} falling	6.9	7.9	8.9	V
UVLO lockout hysteresis (Si826xxBx mode)	VDD_{HYS}		—	500	—	mV
UVLO Threshold + (Si826xxCx mode)	VDD_{UV+}	See Figure 12 on page 17. V_{DD} rising	10.5	12	13.5	V
UVLO Threshold – (Si826xxCx mode)	VDD_{UV-}	See Figure 12 on page 17. V_{DD} falling	9.4	10.7	12.2	V
UVLO lockout hysteresis (Si826xxCx mode)	VDD_{HYS}		—	1.3	—	V
AC Switching Parameters						
Input noise filter cut-off pulse width	t_{NFC}		—	—	15	ns
Minimum pulse width	t_{PMIN}		—	30	—	ns
Propagation delay (Low-to-High)	t_{PLH}	C_L = 200 pF	20	40	60	ns
Propagation delay (High-to-Low)	t_{PHL}	C_L = 200 pF	10	30	50	ns
Pulse Width Distortion	PWD	$\lvert t_{PLH} - t_{PHL} \rvert$	—	17	28	ns
Propagation Delay Difference[5]	PDD	$t_{PHLMAX} - t_{PLHMIN}$	-1	—	25	ns
Rise time	t_R	C_L = 200 pF	—	5.5	15	ns
Fall time	t_F	C_L = 200 pF	—	8.5	20	ns
Device Startup Time	t_{START}		—	16	30	µs
Common Mode Transient Immunity	CMTI	Output = low or high (V_{CM} = 1500 V), ($I_F \geq$ 6 mA) (See Figure 4)	35	50	—	kV/µs

Notes:
1. See "8.Ordering Guide" on page 24 for more information.
2. Minimum value of (V_{DD} - GND) decoupling capacitor is 1 µF.
3. Both V_O pins are required to be shorted together for 4.0 A compliance.
4. When performing this test, it is recommended that the DUT be soldered down to the PCB to reduce parasitic inductances, which may cause over-stress conditions due to excessive ringing.
5. Guaranteed by characterization.

chanhvinh.com

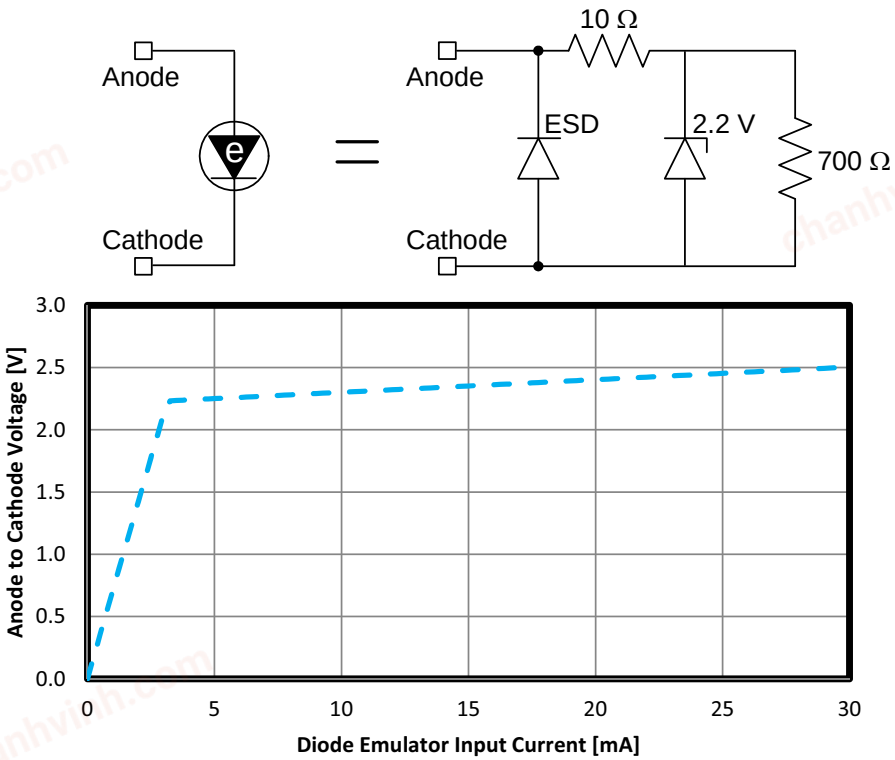

Figure 1. Diode Emulator Model and I-V Curve

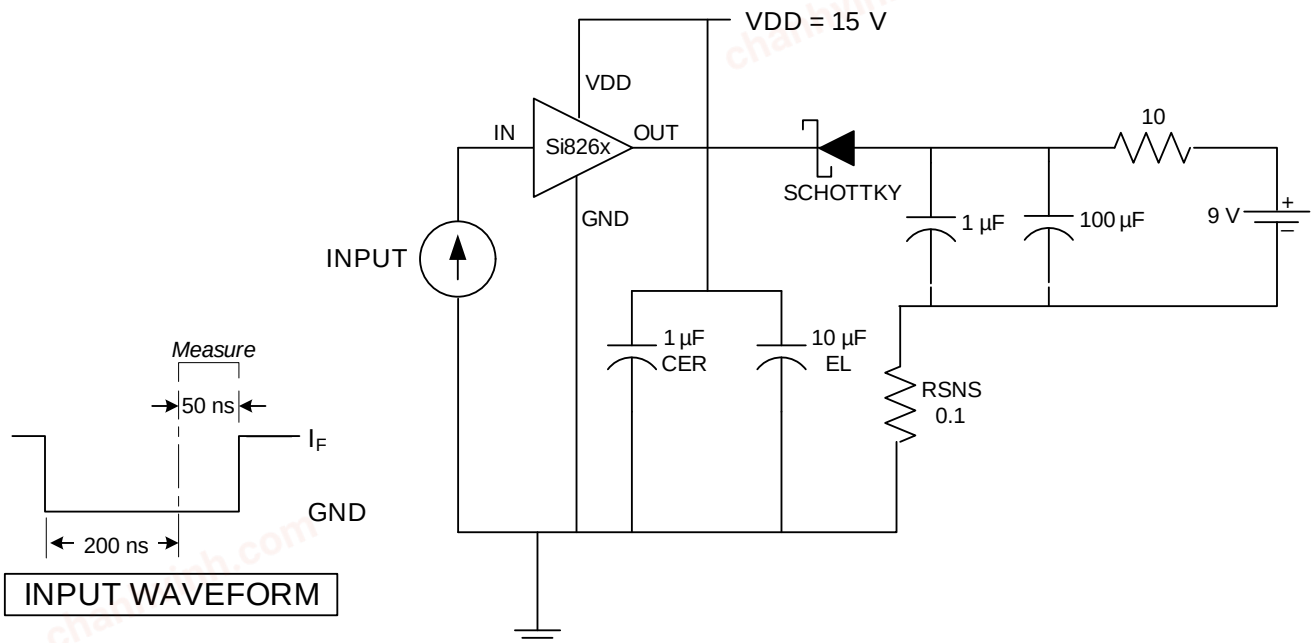

Figure 2. IOL Sink Current Test Circuit

chanhvinh.com

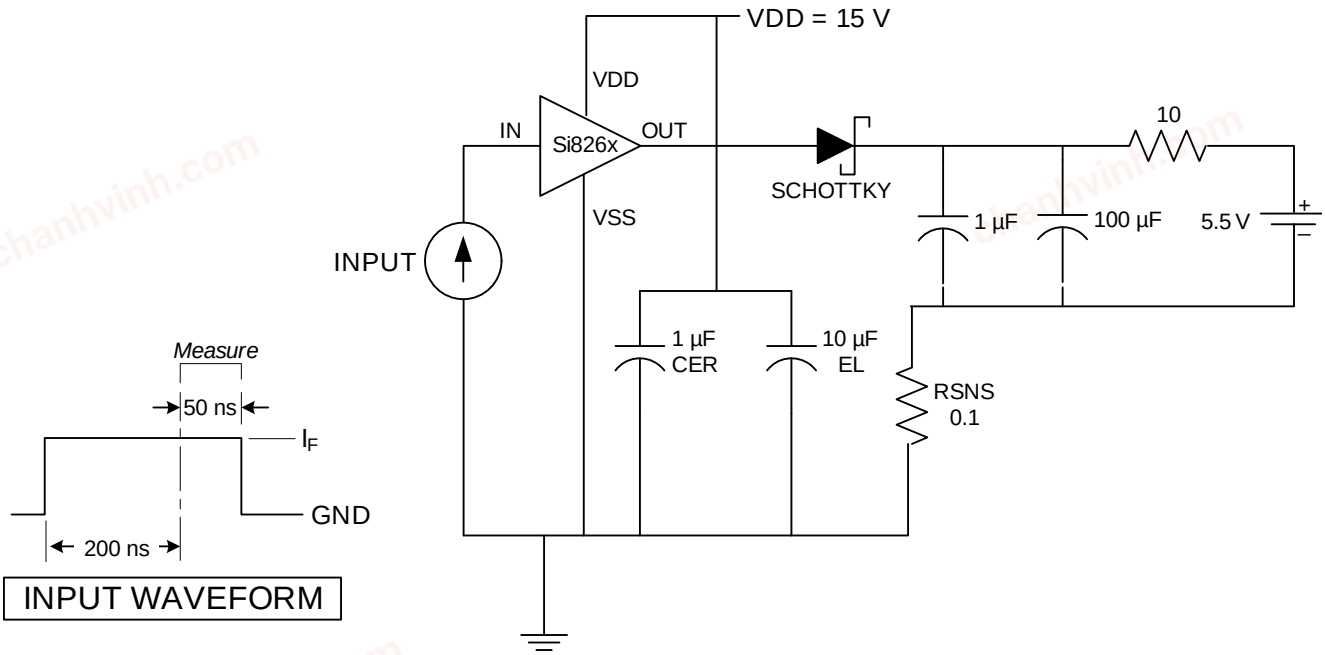

Figure 3. IOH Source Current Test Circuit

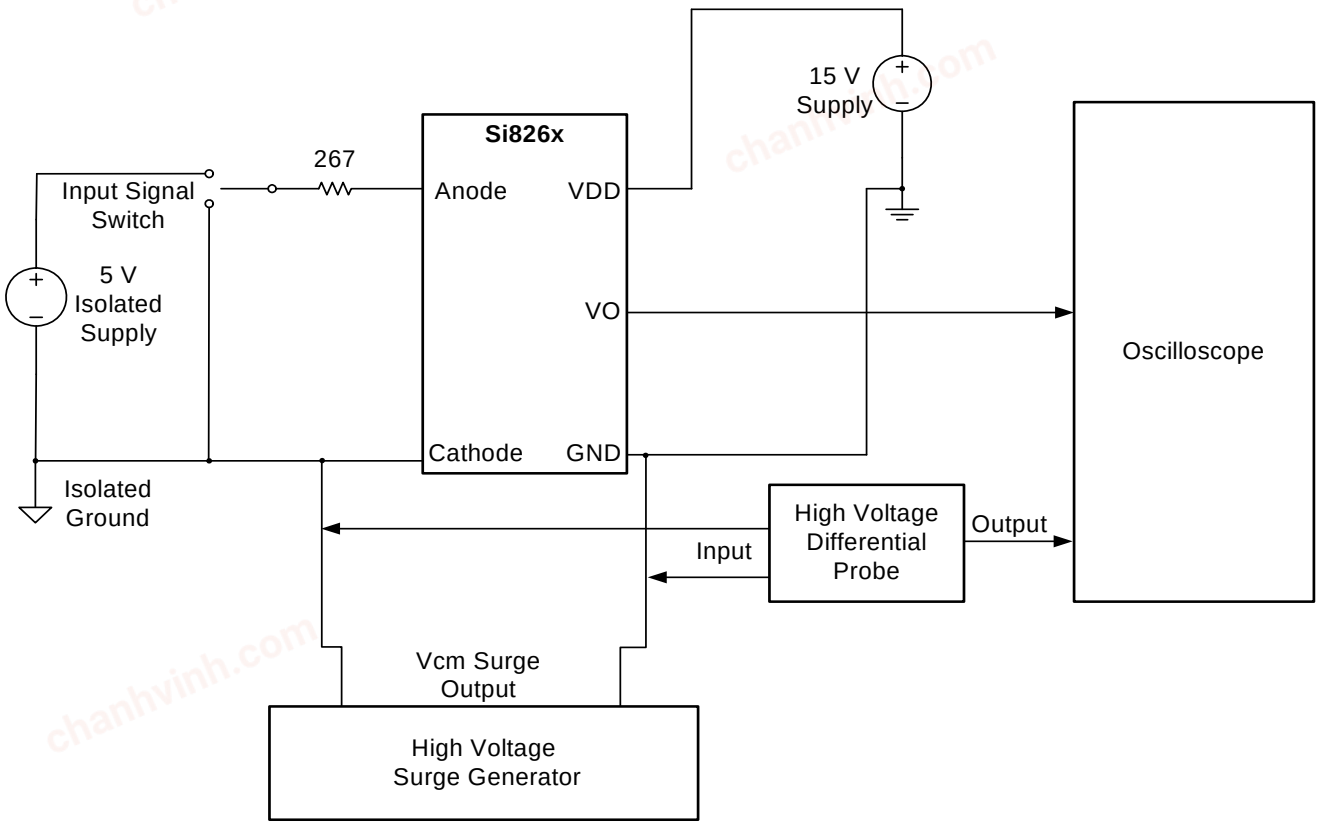

Figure 4. Common Mode Transient Immunity Characterization Circuit

chanhvinh.com

2. Regulatory Information

Table 3. Regulatory Information*

CSA
The Si826x is certified under CSA Component Acceptance Notice 5A. For more details, see Master Contract Number 232873.
60950-1: Up to 1000 V_{RMS} reinforced insulation working voltage; up to 1000 V_{RMS} basic insulation working voltage.
60601-1: Up to 250 V_{RMS} working voltage and 2 MOPP (Means of Patient Protection).
VDE
The Si826x is certified according to VDE0884-10. For more details, see certificate 40037519.
VDE0884 Part 10: Up to 1414 V_{peak} for reinforced insulation working voltage.
UL
The Si826x is certified under UL1577 component recognition program. For more details, see File E257455.
Rated up to 5000 V_{RMS} isolation voltage for basic protection.
CQC
The Si826x is certified under GB4943.1-2011. For more details, see certificates CQC15001121282 and CQC15001121283.
Rated up to 1000 V_{RMS} reinforced insulation working voltage; up to 1000 V_{RMS} basic insulation working voltage.
***Note:** Regulatory Certifications apply to 3.75 kV_{RMS} rated devices which are production tested to 4.5 kV_{RMS} for 1 sec. Regulatory Certifications apply to 5.0 kV_{RMS} rated devices which are production tested to 6.0 kV_{RMS} for 1 sec. For more information, see "8.Ordering Guide" on page 24.

Table 4. Insulation and Safety-Related Specifications

Parameter	Symbol	Test Condition	Value			Unit
			SOIC-8	DIP8	SDIP6	
Nominal External Air Gap (Clearance)	CLR		4.7 min	7.2 min	9.6 min	mm
Nominal External Tracking (Creepage)	CPG		3.9 min	7.0 min	8.3 min	mm
Minimum Internal Gap (Internal Clearance)	DTI		0.016	0.016	0.016	mm
Tracking Resistance	CTI or PTI	IEC60112	600	600	600	V
Erosion Depth	ED		0.031	0.031	0.057	mm
Resistance (Input-Output)*	R_{IO}		10^{12}	10^{12}	10^{12}	Ω
Capacitance (Input-Output)*	C_{IO}	f = 1 MHz	1	1	1	pF
***Note:** To determine resistance and capacitance, the Si826x is converted into a 2-terminal device. Pins 1–4 (1–3, SDIP6) are shorted together to form the first terminal, and pins 5–8 (4–6, SDIP6) are shorted together to form the second terminal. The parameters are then measured between these two terminals.						

chanhvinh.com

Table 5. IEC 60664-1 Ratings

Parameter	Test Conditions	Specification		
		SOIC-8	DIP8	SDIP6
Basic Isolation Group	Material Group	I	I	I
Installation Classification	Rated Mains Voltages ≤ 150 V_{RMS}	I-IV	I-IV	I-IV
	Rated Mains Voltages ≤ 300 V_{RMS}	I-IV	I-IV	I-IV
	Rated Mains Voltages ≤ 450 V_{RMS}	I-III	I-III	I-IV
	Rated Mains Voltages ≤ 600 V_{RMS}	I-III	I-III	I-IV
	Rated Mains Voltages ≤ 1000 V_{RMS}	I-II	I-II	I-III

Table 6. VDE 0884-10 Insulation Characteristics*

Parameter	Symbol	Test Condition	Characteristic			Unit
			SOIC-8	DIP8	SDIP6	
Maximum Working Insulation Voltage	V_{IORM}		630	891	1140	V peak
Input to Output Test Voltage	V_{PR}	Method b1 (V_{IORM} x 1.875 = V_{PR}, 100% Production Test, t_m = 1 sec, Partial Discharge < 5 pC)	1181	1671	2138	V peak
Transient Overvoltage	V_{IOTM}	t = 60 sec	6000	6000	8000	V peak
Surge Voltage	V_{IOSM}	Tested per IEC 60065 with surge voltage of 1.2 µs/50 µs Si826x tested with magnitude 6250 V x 1.6 = 10 kV	6250	6250	6250	V peak
Pollution Degree (DIN VDE 0110, Table 1)			2	2	2	
Insulation Resistance at T_S, V_{IO} = 500 V	R_S		$>10^9$	$>10^9$	$>10^9$	Ω

***Note:** This isolator is suitable for reinforced electrical isolation only within the safety limit data. Maintenance of the safety data is ensured by protective circuits. The Si826x provides a climate classification of 40/125/21.

chanhvinh.com

Table 7. IEC Safety Limiting Values*

Parameter	Symbol	Test Condition	Max			Unit
			SOIC-8	DIP8	SDIP6	
Case Temperature	T_S		140	140	140	°C
Input Current	I_S	θ_{JA} = 110 °C/W (SOIC-8), 110 °C/W (DIP8), 105 °C/W (SDIP6), V_F = 2.8 V, T_J = 140 °C, T_A = 25 °C	370	370	390	mA
Output Power	P_S		1	1	1	W

***Note:** Maximum value allowed in the event of a failure; also see the thermal derating curve in Figures 5, 6, 7, and 8.

chanhvinh.com

Table 8. Thermal Characteristics

Parameter	Symbol	Typ			Unit
		SOIC-8	DIP8	SDIP6	
IC Junction-to-Air Thermal Resistance	θ_{JA}	110	110	105	°C/W

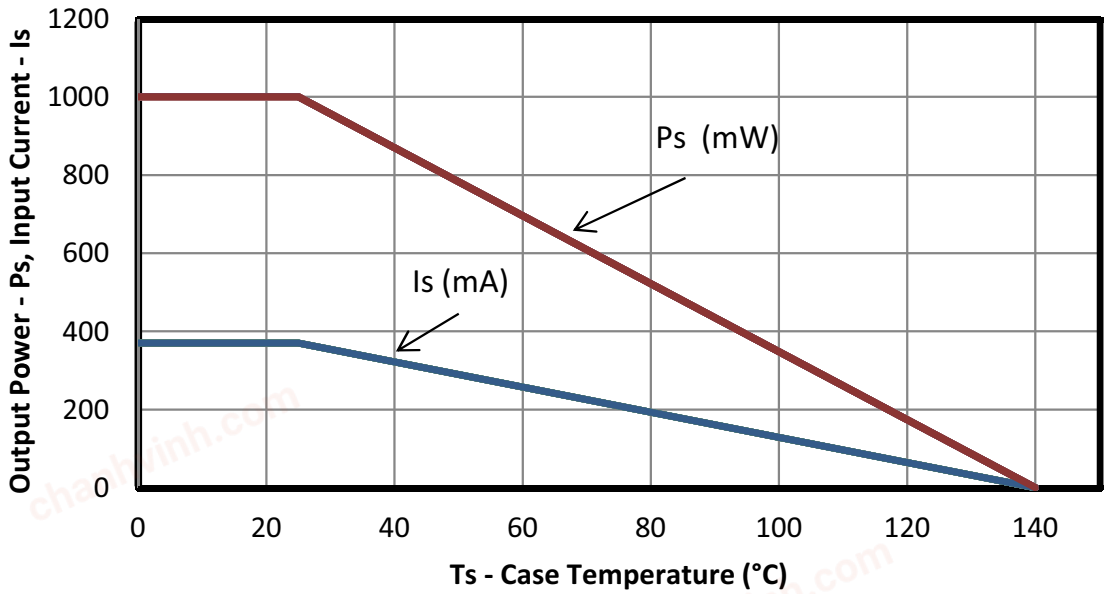

Figure 5. (SOIC-8) Thermal Derating Curve, Dependence of Safety Limiting Values with Case Temperature per VDE0884-10

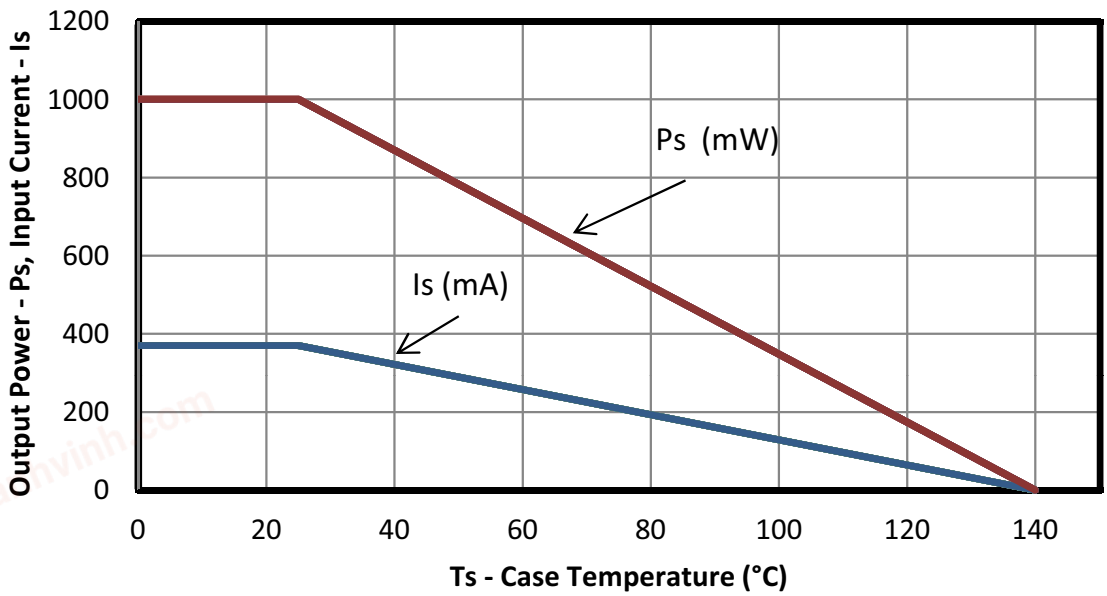

Figure 6. (DIP8) Thermal Derating Curve, Dependence of Safety Limiting Values with Case Temperature per VDE0884-10

chanhvinh.com

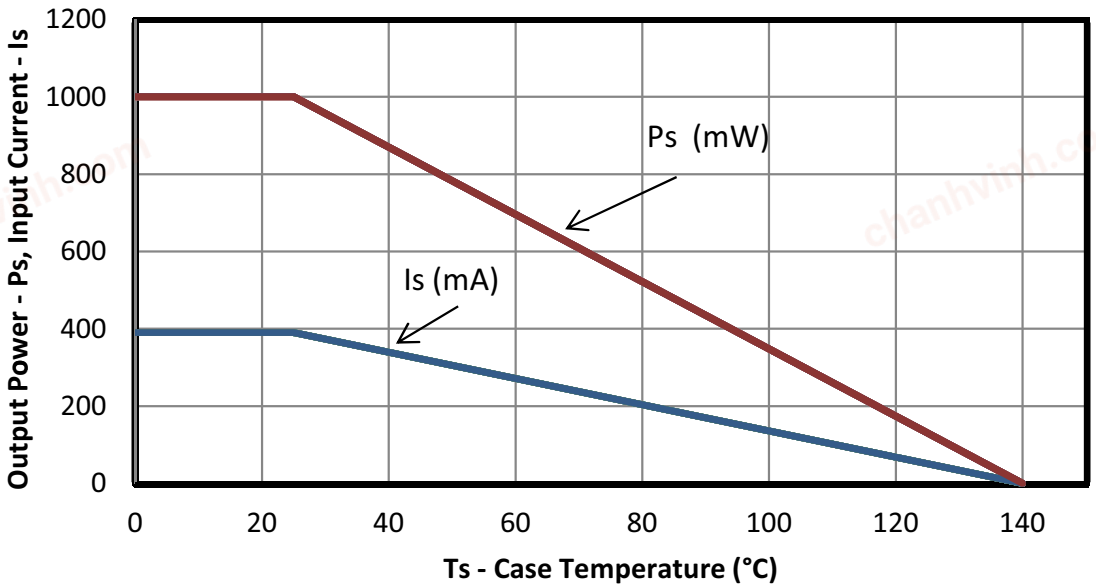

Figure 7. (SDIP6) Thermal Derating Curve, Dependence of Safety Limiting Values with Case Temperature per VDE0884-10

chanhvinh.com

Table 9. Absolute Maximum Ratings*

Parameter	Symbol	Min	Max	Unit
Storage Temperature	T_{STG}	–65	+150	°C
Operating Temperature	T_A	–40	+125	°C
Junction Temperature	T_J	—	+140	°C
Average Forward Input Current	$I_{F(AVG)}$	—	30	mA
Peak Transient Input Current (< 1 µs pulse width, 300 ps)	I_{FTR}	—	1	A
Reverse Input Voltage	V_R	—	0.3	V
Supply Voltage	VDD	–0.5	36	V
Output Voltage	V_{OUT}	–0.5	36	V
Peak Output Current (t_{PW} = 10 µs, duty cycle = 0.2%) (0.6 Amp versions)	I_{OPK}	—	0.6	A
Peak Output Current (t_{PW} = 10 µs, duty cycle = 0.2%) (4.0 Amp versions)	I_{OPK}	—	4.0	A
Input Power Dissipation	P_I	—	75	mW
Output Power Dissipation	P_O	—	225	mW
Total Power Dissipation (all packages limited by thermal derating curve)	P_T	—	300	mW
Lead Solder Temperature (10 s)		—	260	°C
HBM Rating ESD		4	—	kV
Machine Model ESD		300	—	V
CDM		2000	—	V
Maximum Isolation Voltage (1 s) SOIC-8		—	4500	V_{RMS}
Maximum Isolation Voltage (1 s) DIP8		—	6500	V_{RMS}
Maximum Isolation Voltage (1 s) SDIP6		—	6500	V_{RMS}

***Note:** Permanent device damage may occur if the absolute maximum ratings are exceeded. Functional operation should be restricted to the conditions specified in the operational sections of this data sheet.

chanhvinh.com

3. Functional Description

3.1. Theory of Operation

The Si826x is a functional upgrade for popular opto-isolated drivers, such as the Avago HPCL-3120, HPCL-0302, Toshiba TLP350, and others. The operation of an Si826x channel is analogous to that of an opto coupler, except an RF carrier is modulated instead of light. This simple architecture provides a robust isolated data path and requires no special considerations or initialization at start-up. The Si826x also includes a noise filter that suppresses propagation of any pulse narrower than 15 ns. A simplified block diagram for the Si826x is shown in Figure 8.

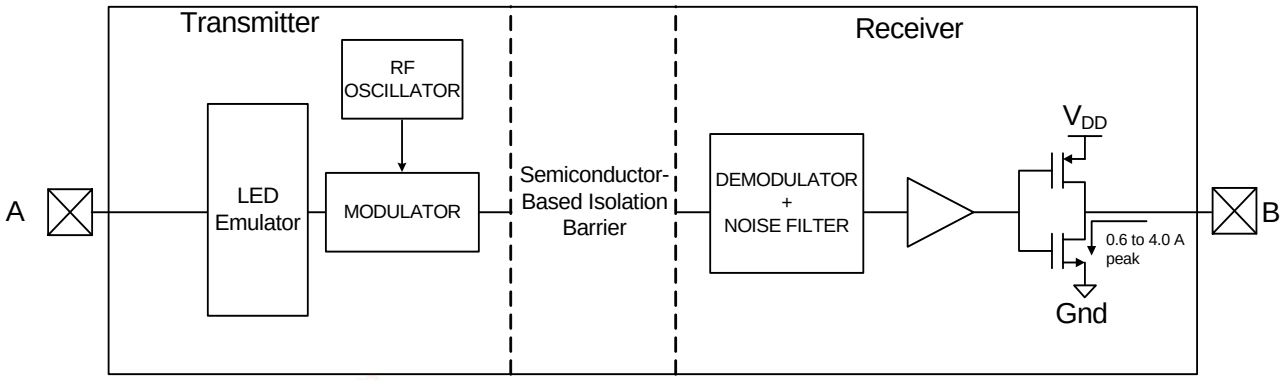

Figure 8. Simplified Channel Diagram

chanhvinh.com

4. Technical Description

4.1. Device Behavior

Truth tables for the Si826x are summarized in Table 10.

Table 10. Si826x Truth Table Summary*

Input	V_{DD}	V_O
OFF	> UVLO	LOW
OFF	< UVLO	LOW
ON	> UVLO	HIGH
ON	< UVLO	LOW

***Note:** This truth table assumes VDD is powered. If VDD is below UVLO, see "4.3.Under Voltage Lockout (UVLO)" on page 17 for more information.

4.2. Device Startup

Output V_O is held low during power-up until V_{DD} rises above the UVLO+ threshold for a minimum time period of t_{START}. Following this, the output is high when the current flowing from anode to cathode is > $I_{F(ON)}$. Device startup, normal operation, and shutdown behavior is shown in Figure 9.

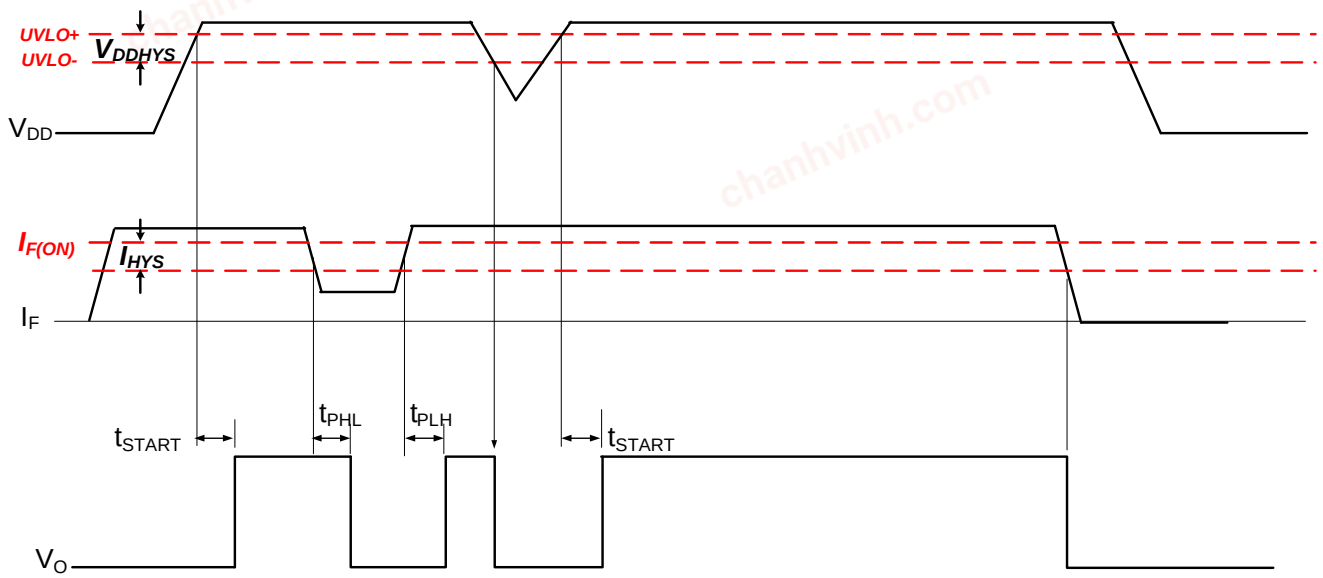

Figure 9. Si826x Operating Behavior ($I_F \geq I_{F(MIN)}$ when $V_F \geq V_{F(MIN)}$)

chanhvinh.com

4.3. Under Voltage Lockout (UVLO)

The UVLO circuit unconditionally drives V_O low when V_{DD} is below the lockout threshold. Referring to Figures 10 through 12, upon power up, the Si826x is maintained in UVLO until VDD rises above VDD_{UV+}. During power down, the Si826x enters UVLO when VDD falls below the UVLO threshold plus hysteresis (i.e., VDD ≤ VDD_{UV+} – VDD_{HYS}).

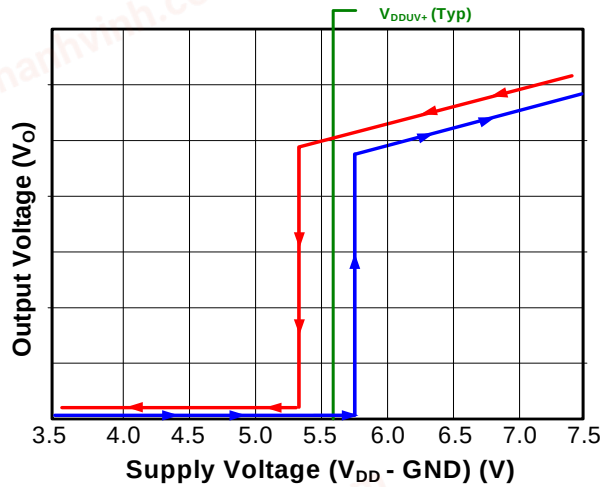

Figure 10. Si826xxAx UVLO Response (5 V)

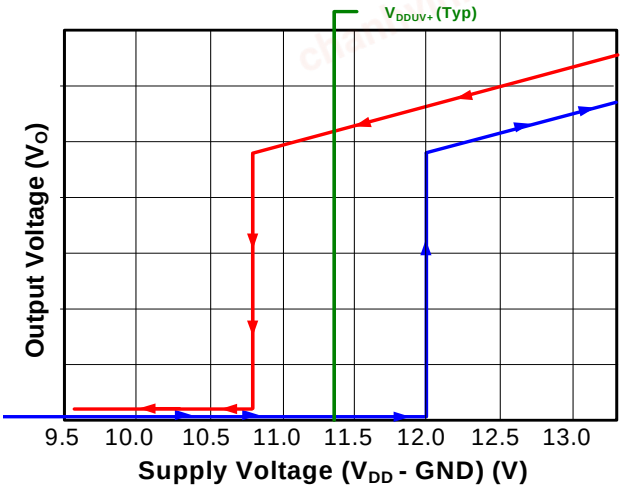

Figure 12. Si826xxCx UVLO Response (12 V)

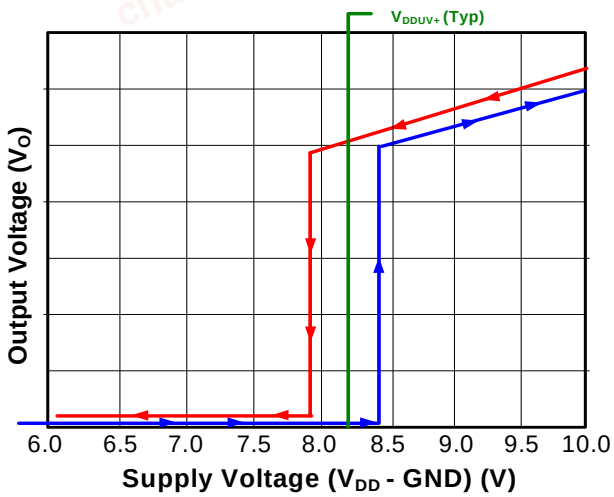

Figure 11. Si826xxBX UVLO Response (8 V)

chanhvinh.com

5. Applications

The following sections detail the input and output circuits necessary for proper operation. Power dissipation and layout considerations are also discussed.

5.1. Input Circuit Design

Opto driver manufacturers typically recommend the circuits shown in Figures 13 and 14. These circuits are specifically designed to improve opto-coupler input common-mode rejection and increase noise immunity.

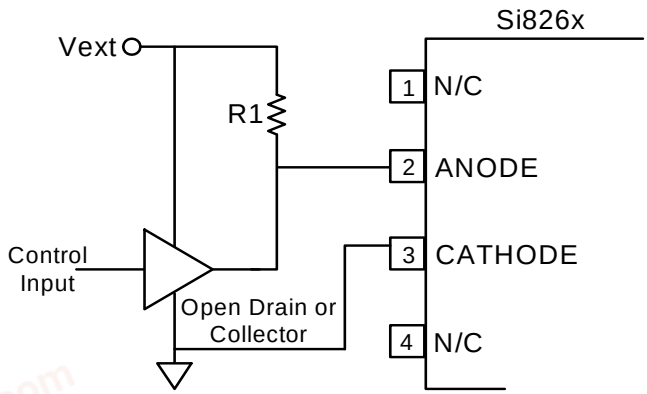

Figure 13. Si826x Input Circuit

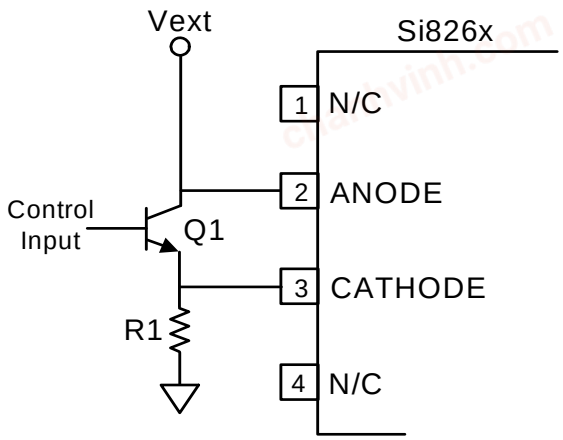

Figure 14. High CMR Si826x Input Circuit

The optically-coupled driver circuit of Figure 13 turns the LED on when the control input is high. However, internal capacitive coupling from the LED to the power and ground conductors can momentarily force the LED into its off state when the anode and cathode inputs are subjected to a high common-mode transient. The circuit shown in Figure 14 addresses this issue by using a value of R1 sufficiently low to overdrive the LED, ensuring it remains on during an input common-mode transient. Q1 shorts the LED off in the low output state, again increasing common-mode transient immunity.

Some opto driver applications recommend reverse-biasing the LED when the control input is off to prevent coupled noise from energizing the LED. The Si826x input circuit requires less current and has twice the off-state noise margin compared to opto couplers. However, high CMR opto coupler designs that overdrive the LED (see Figure 14) may require increasing the value of R1 to limit input current I_F to its maximum rating when using the Si826x. In addition, there is no benefit in driving the Si826x input diode into reverse bias when in the off state.

chanhvinh.com

Consequently, opto coupler circuits using this technique should either leave the negative bias circuitry unpopulated or modify the circuitry (e.g., add a clamp diode or current limiting resistor) to ensure that the anode pin of the Si826x is no more than –0.3 V with respect to the cathode when reverse-biased.

New designs should consider the input circuit configurations of Figure 15, which are more efficient than those of Figures 13 and 14. As shown, S1 and S2 represent any suitable switch, such as a BJT or MOSFET, analog transmission gate, processor I/O, etc. Also, note that the Si826x input can be driven from the I/O port of any MCU or FPGA capable of sourcing a minimum of 6 mA (see Figure 15C). Additionally, note that the Si826x propagation delay and output drive do not significantly change for values of I_F between $I_{F(MIN)}$ and $I_{F(MAX)}$.

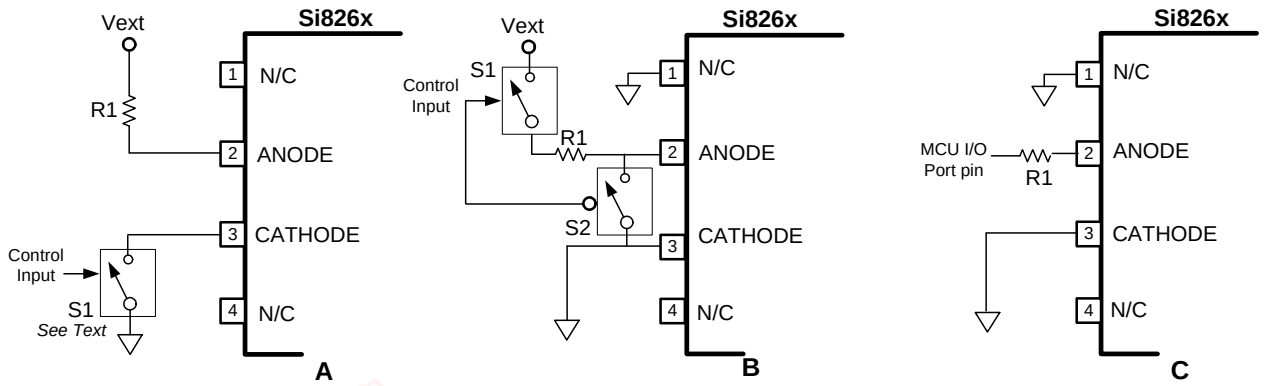

Figure 15. Si826x Other Input Circuit Configurations

5.2. Output Circuit Design

GND can be biased at, above, or below ground as long as the voltage on V_{DD} with respect to GND is a maximum of 30 V. V_{DD} decoupling capacitors should be placed as close to the package pins as possible. The optimum values for these capacitors depend on load current and the distance between the chip and its power source. It is recommended that 0.1 and 10 µF bypass capacitors be used to reduce high-frequency noise and maximize performance.

5.3. Layout Considerations

It is most important to minimize ringing in the drive path and noise on the V_{DD} lines. Care must be taken to minimize parasitic inductance in these paths by locating the Si826x as close as possible to the device it is driving. In addition, the V_{DD} supply and ground trace paths must be kept short. For this reason, the use of power and ground planes is highly recommended. A split ground plane system having separate ground and V_{DD} planes for power devices and small signal components provides the best overall noise performance.

chanhvinh.com

5.4. Power Dissipation Considerations

Proper system design must assure that the Si826x operates within safe thermal limits across the entire load range. The Si826x total power dissipation is the sum of the power dissipated by bias supply current, internal switching losses, and power delivered to the load, as shown in Equation 1.

$$P_D = I_F \times V_F \times DC + V_{DD} \times [I_{DDQ} + (Q_d + C_L \times V_{DD}) \times f]$$

where: P_D is the total device power dissipation (W)

I_F is the diode current (30 mA max)

V_F is the diode anode to cathode voltage (2.8 V max)

DC is duty cycle (0.5 typical)

V_{DD} is the driver-side supply voltage (30 V max)

I_{DDQ} is the driver maximum bias current (2.5 mA)

Q_d is 3 nC

C_L is the load capacitance

f is the switching frequency (Hz)

Equation 1.

The maximum allowable power dissipation for the Si826x is a function of the package thermal resistance, ambient temperature, and maximum allowable junction temperature, as shown in Equation 2.

$$P_{Dmax} \leq \frac{T_{jmax} - T_A}{\theta_{ja}}$$

where:

P_{Dmax} is the maximum allowable power dissipation (W)

T_{jmax} is the maximum junction temperature (140 °C)

T_A is the ambient temperature (°C)

θ_{ja} is the package junction-to-air thermal resistance (110 °C/W)

Equation 2.

Substituting values for P_{Dmax} T_{jmax}, T_A, and θ_{ja} into Equation 2 results in a maximum allowable total power dissipation of 1.0 W. Note that the maximum allowable load is found by substituting this limit and the appropriate datasheet values from Table 2 on page 4 into Equation 1 and simplifying. Graphs are shown in Figures 16 and 18. All points along the load lines in these graphs represent the package dissipation-limited value of C_L for the corresponding switching frequency.

chanhvinh.com

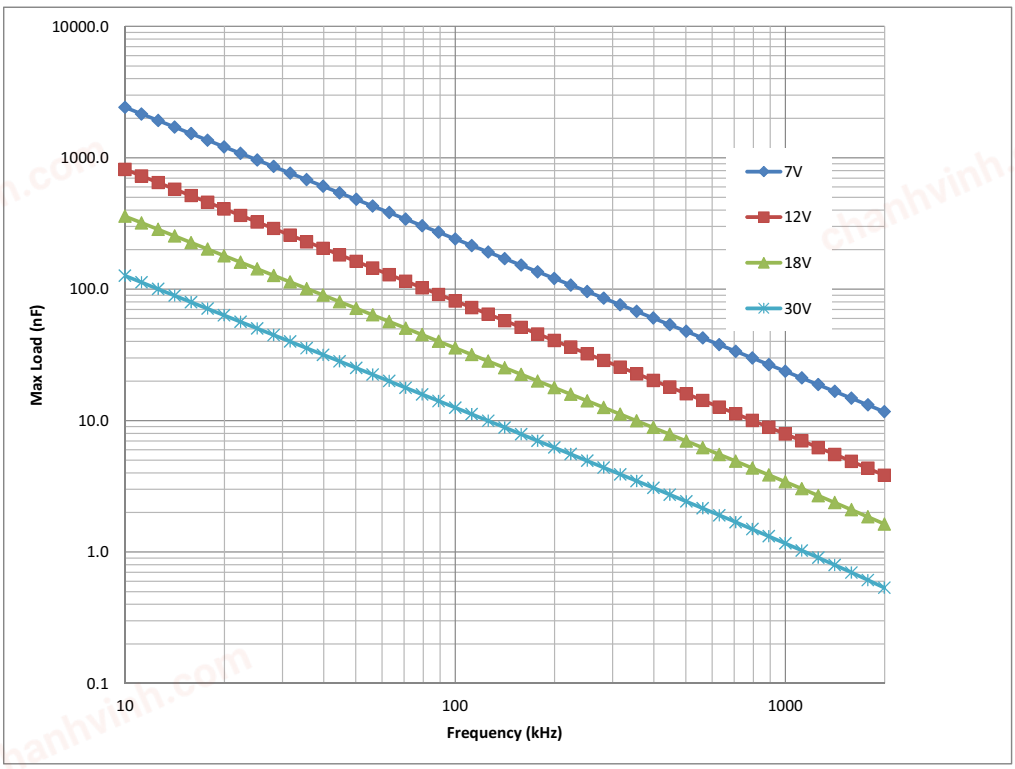

Figure 16. (SOIC-8, DIP8, SDIP6) Maximum Load vs. Switching Frequency (25 °C)

chanhvinh.com

6. Pin Descriptions (SOIC-8, DIP8)

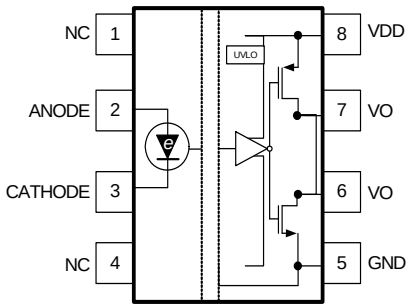

SOIC-8, DIP8
Industry Standard Pinout

Figure 17. Pin Configuration

Table 11. Pin Descriptions (SOIC-8, DIP8)

Pin	Name	Description
1	NC*	No connect.
2	ANODE	Anode of LED emulator. V_O follows the signal applied to this input with respect to the CATHODE input.
3	CATHODE	Cathode of LED emulator. V_O follows the signal applied to ANODE with respect to this input.
4	NC*	No connect.
5	GND	External MOSFET source connection and ground reference for V_{DD}. This terminal is typically connected to ground but may be tied to a negative or positive voltage.
6	V_O	Output signal. Both V_O pins are required to be shorted together for 4.0 A compliance.
7	V_O	Output signal. Both V_O pins are required to be shorted together for 4.0 A compliance.
8	V_{DD}	Output-side power supply input referenced to GND (30 V max).
***Note:** No Connect. These pins are not internally connected. To maximize CMTI performance, these pins should be connected to the ground plane.		

chanhvinh.com

7. Pin Descriptions (SDIP6)

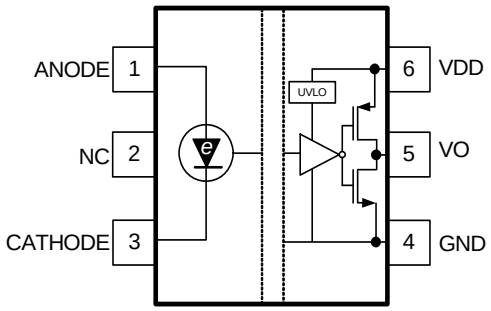

SDIP6
Industry Standard Pinout

Figure 18. Pin Configuration

Table 12. Pin Descriptions (SDIP6)

Pin	Name	Description
1	ANODE	Anode of LED emulator. V_O follows the signal applied to this input with respect to the CATHODE input.
2	NC*	No connect.
3	CATHODE	Cathode of LED emulator. V_O follows the signal applied to ANODE with respect to this input.
4	GND	External MOSFET source connection and ground reference for V_{DD}. This terminal is typically connected to ground but may be tied to a negative or positive voltage.
5	V_O	Output signal.
6	V_{DD}	Output-side power supply input referenced to GND (30 V max).
***Note:** No Connect. These pins are not internally connected. To maximize CMTI performance, these pins should be connected to the ground plane.		

chanhvinh.com

8. Ordering Guide

Table 13. Si826x Ordering Guide[1,2,3]

New Ordering Part Number (OPN)	Ordering Options					
	Output Configuration	Cross Reference	UVLO Voltage	Insulation Rating	Temp Range	Pkg Type
Si8261AAC-C-IS	0.6 A driver	HCPL-0314	5 V	3.75 kVrms	–40 to +125 °C	SOIC-8
Si8261BAC-C-IS	4.0 A driver	—	5 V	3.75 kVrms	–40 to +125 °C	SOIC-8
Si8261AAC-C-IP	0.6 A driver	HCPL-3140	5 V	3.75 kVrms	–40 to +125 °C	DIP8/GW
Si8261BAC-C-IP	4.0 A driver	TLP 350 HCPL-3120	5 V	3.75 kVrms	–40 to +125 °C	DIP8/GW
Si8261AAD-C-IS	0.6 A driver	ACPL-W314	5 V	5.0 kVrms	–40 to +125 °C	SDIP6
Si8261BAD-C-IS	4.0 A driver	TLP 700F	5 V	5.0 kVrms	–40 to +125 °C	SDIP6

Notes:
1. All packages are RoHS-compliant with peak solder reflow temperatures of 260 °C according to the JEDEC industry standard classifications.
2. “Si” and “SI” are used interchangeably.
3. AEC-Q100 qualified.

chanhvinh.com

Table 13. Si826x Ordering Guide[1,2,3]

New Ordering Part Number (OPN)	Ordering Options					
	Output Configuration	Cross Reference	UVLO Voltage	Insulation Rating	Temp Range	Pkg Type
Si8261ABC-C-IS	0.6 A driver	HCPL-0314	8 V	3.75 kVrms	–40 to +125 °C	SOIC-8
Si8261BBC-C-IS	4.0 A driver	—	8 V	3.75 kVrms	–40 to +125 °C	SOIC-8
Si8261ABC-C-IP	0.6 A driver	HCPL-3140	8 V	3.75 kVrms	–40 to +125 °C	DIP8/GW
Si8261BBC-C-IP	4.0 A driver	TLP 350 HCPL-3120	8 V	3.75 kVrms	–40 to +125 °C	DIP8/GW
Si8261ABD-C-IS	0.6 A driver	ACPL-W314	8 V	5.0 kVrms	–40 to +125 °C	SDIP6
Si8261BBD-C-IS	4.0 A driver	TLP 700F	8 V	5.0 kVrms	–40 to +125 °C	SDIP6

Notes:
1. All packages are RoHS-compliant with peak solder reflow temperatures of 260 °C according to the JEDEC industry standard classifications.
2. “Si” and “SI” are used interchangeably.
3. AEC-Q100 qualified.

chanhvinh.com

Table 13. Si826x Ordering Guide[1,2,3]

New Ordering Part Number (OPN)	Ordering Options					
	Output Configuration	Cross Reference	UVLO Voltage	Insulation Rating	Temp Range	Pkg Type
Si8261ACC-C-IS	0.6 A driver	HCPL-0314	12 V	3.75 kVrms	–40 to +125 °C	SOIC-8
Si8261BCC-C-IS	4.0 A driver	—	12 V	3.75 kVrms	–40 to +125 °C	SOIC-8
Si8261ACC-C-IP	0.6 A driver	HCPL-3140	12 V	3.75 kVrms	–40 to +125 °C	DIP8/GW
Si8261BCC-C-IP	4.0 A driver	TLP 350 HCPL-3120	12 V	3.75 kVrms	–40 to +125 °C	DIP8/GW
Si8261ACD-C-IS	0.6 A driver	ACPL-W314	12 V	5.0 kVrms	–40 to +125 °C	SDIP6
Si8261BCD-C-IS	4.0 A driver	TLP 700F	12 V	5.0 kVrms	–40 to +125 °C	SDIP6

Notes:
1. All packages are RoHS-compliant with peak solder reflow temperatures of 260 °C according to the JEDEC industry standard classifications.
2. “Si” and “SI” are used interchangeably.
3. AEC-Q100 qualified.

chanhvinh.com

8.1. Automotive Grade OPNs

Automotive-grade devices are built using automotive-specific flows at all steps in the manufacturing process to ensure robustness and low defectivity. These devices are supported with AIAG-compliant Production Part Approval Process (PPAP) documentation, and feature International Material Data System (IMDS) and China Automotive Material Data System (CAMDS) listing. Qualifications are compliant with AEC-Q100, and a zero-defect methodology is maintained throughout definition, design, evaluation, qualification, and mass production steps.

Table 14. Si826x Ordering Guide[1,2,3]

New Ordering Part Number (OPN)	Ordering Options					
	Output Configuration	Cross Reference	UVLO Voltage	Insulation Rating	Temp Range	Pkg Type
Si8261BBC-AP	4.0 A driver	TLP 350 HCPL-3120	8 V	3.75 kVrms	–40 to +125 °C	DIP8/GW
Si8261BBC-AS	4.0 A driver	—	8 V	3.75 kVrms	–40 to +125 °C	SOIC-8
Si8261BCC-AS	4.0 A driver	—	12 V	3.75 kVrms	–40 to +125 °C	SOIC-8
Si8261BCD-AS	4.0 A driver	TLP 700F	12 V	5.0 kVrms	–40 to +125 °C	SDIP6

Notes:

1. All packages are RoHS-compliant with peak solder reflow temperatures of 260 °C according to the JEDEC industry standard classifications.
2. “Si” and “SI” are used interchangeably.
3. AEC-Q100 qualified
4. An "R" at the end of the part number denotes tape and reel packaging option.
5. Automotive-Grade devices (with an "–A" suffix) are identical in construction materials, topside marking, and electrical parameters to their Industrial-Grade (with a "–I" suffix) version counterparts. Automotive-Grade products are produced utilizing full automotive process flows and additional statistical process controls throughout the manufacturing flow. The Automotive-Grade part number is included on shipping labels.
6. Additional Ordering Part Numbers may be available in Automotive-Grade. Please contact your local Skyworks Solutions sales representative for further information.
7. In Chapter 15.Top Markings on page 35, the Manufacturing Code represented by either “RTTTTT” or “TTTTTT” contains as its first character a letter in the range N through Z to indicate Automotive-Grade.

chanhvinh.com

9. Package Outline: 8-Pin Narrow Body SOIC

Figure 19 illustrates the package details for the Si826x in an 8-pin narrow-body SOIC package. Table 15 lists the values for the dimensions shown in the illustration.

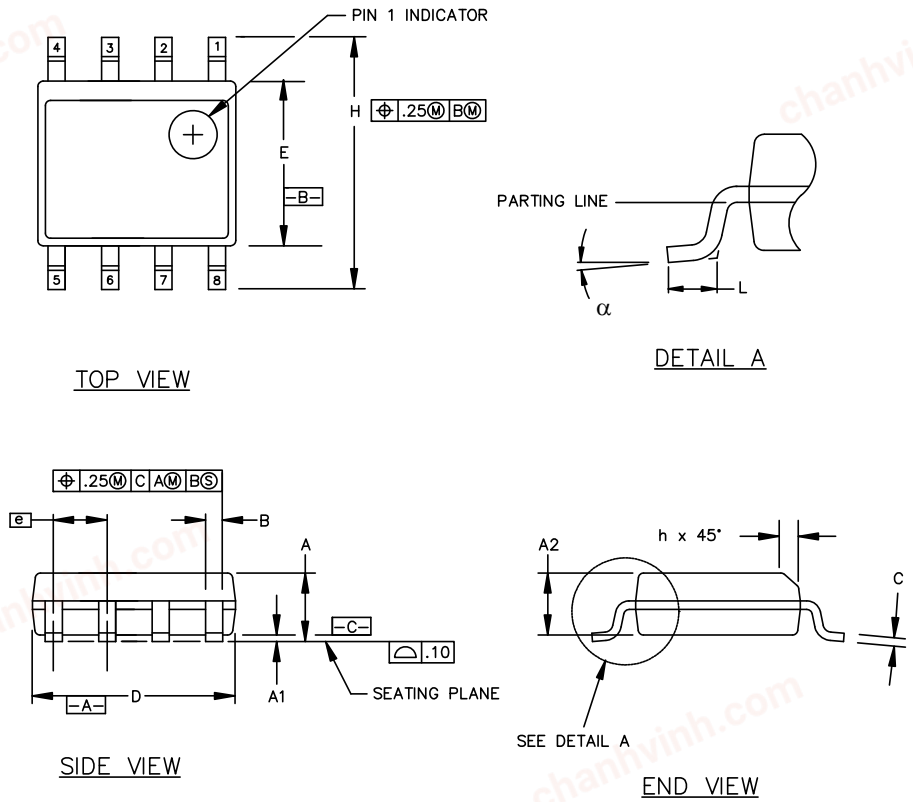

Figure 19. 8-Pin Narrow Body SOIC Package

Table 15. 8-Pin Narrow Body SOIC Package Diagram Dimensions

Symbol	Millimeters	
	Min	Max
A	1.35	1.75
A1	0.10	0.25
A2	1.40 REF	1.55 REF
B	0.33	0.51
C	0.19	0.25
D	4.80	5.00
E	3.80	4.00
e	1.27 BSC	
H	5.80	6.20
h	0.25	0.50
L	0.40	1.27
∝	0°	8°

chanhvinh.com

10. Land Pattern: 8-Pin Narrow Body SOIC

Figure 20 illustrates the recommended land pattern details for the Si826x in an 8-pin narrow-body SOIC. Table 16 lists the values for the dimensions shown in the illustration.

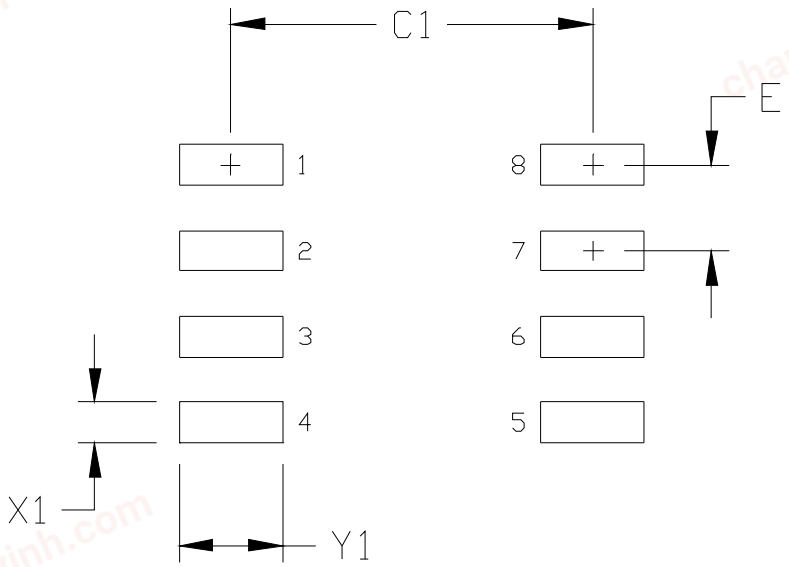

Figure 20. 8-Pin Narrow Body SOIC Land Pattern

Table 16. 8-Pin Narrow Body SOIC Land Pattern Dimensions

Dimension	Feature	(mm)
C1	Pad Column Spacing	5.40
E	Pad Row Pitch	1.27
X1	Pad Width	0.60
Y1	Pad Length	1.55

Notes:
1. This Land Pattern Design is based on IPC-7351 pattern SOIC127P600X173-8N for Density Level B (Median Land Protrusion).
2. All feature sizes shown are at Maximum Material Condition (MMC) and a card fabrication tolerance of 0.05 mm is assumed.

chanhvinh.com

11. Package Outline: DIP8

Figure 21 illustrates the package details for the Si826x in a DIP8 package. Table 17 lists the values for the dimensions shown in the illustration.

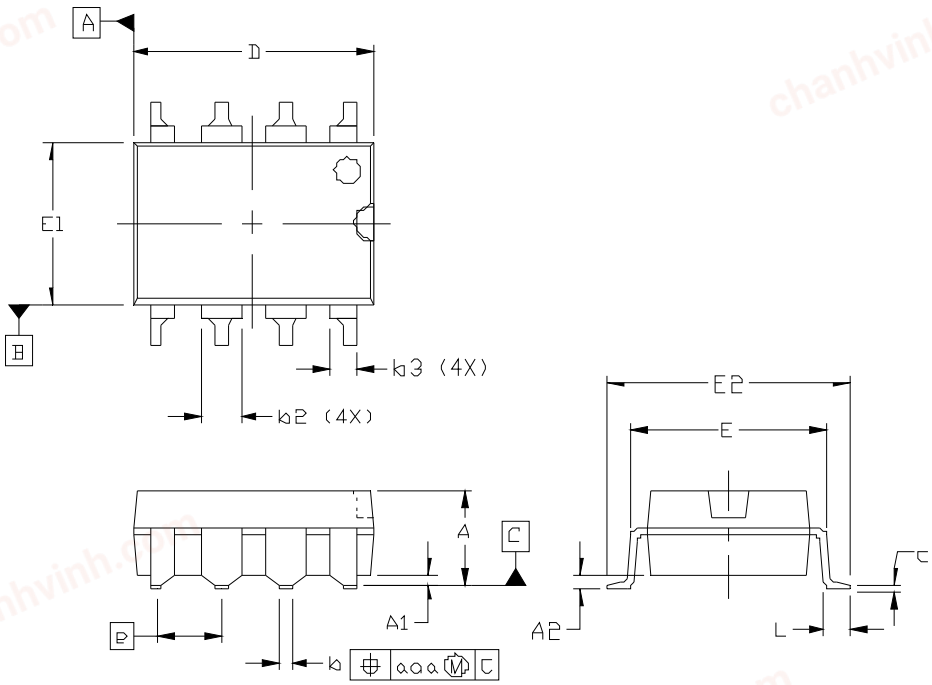

Figure 21. DIP8 Package

Table 17. DIP8 Package Diagram Dimensions

Dimension	Min	Max
A	—	4.19
A1	0.55	0.75
A2	3.17	3.43
b	0.35	0.55
b2	1.14	1.78
b3	0.76	1.14
c	0.20	0.33
D	9.40	9.90
E	7.37	7.87
E1	6.10	6.60
E2	9.40	9.90
e	2.54 BSC.	
L	0.38	0.89
aaa	—	0.25

Notes:
1. All dimensions shown are in millimeters (mm) unless otherwise noted.
2. Dimensioning and Tolerancing per ANSI Y14.5M-1994.

chanhvinh.com

12. Land Pattern: DIP8

Figure 22 illustrates the recommended land pattern details for the Si826x in a DIP8 package. Table 18 lists the values for the dimensions shown in the illustration.

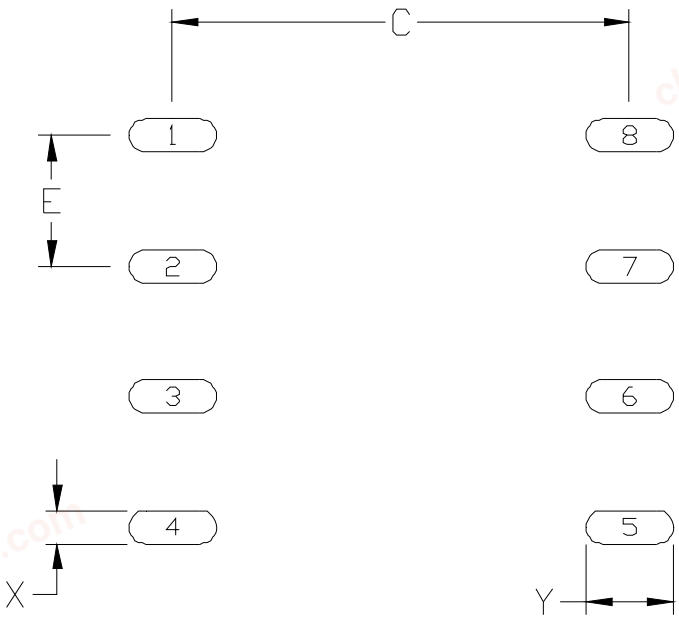

Figure 22. DIP8 Land Pattern

Table 18. DIP8 Land Pattern Dimensions*

Dimension	Min	Max
C	8.85	8.90
E	2.54 BSC	
X	0.60	0.65
Y	1.65	1.70
***Note:** This Land Pattern Design is based on the IPC-7351 specification.		

chanhvinh.com

13. Package Outline: SDIP6

Figure 23 illustrates the package details for the Si826x in an SDIP6 package. Table 19 lists the values for the dimensions shown in the illustration.

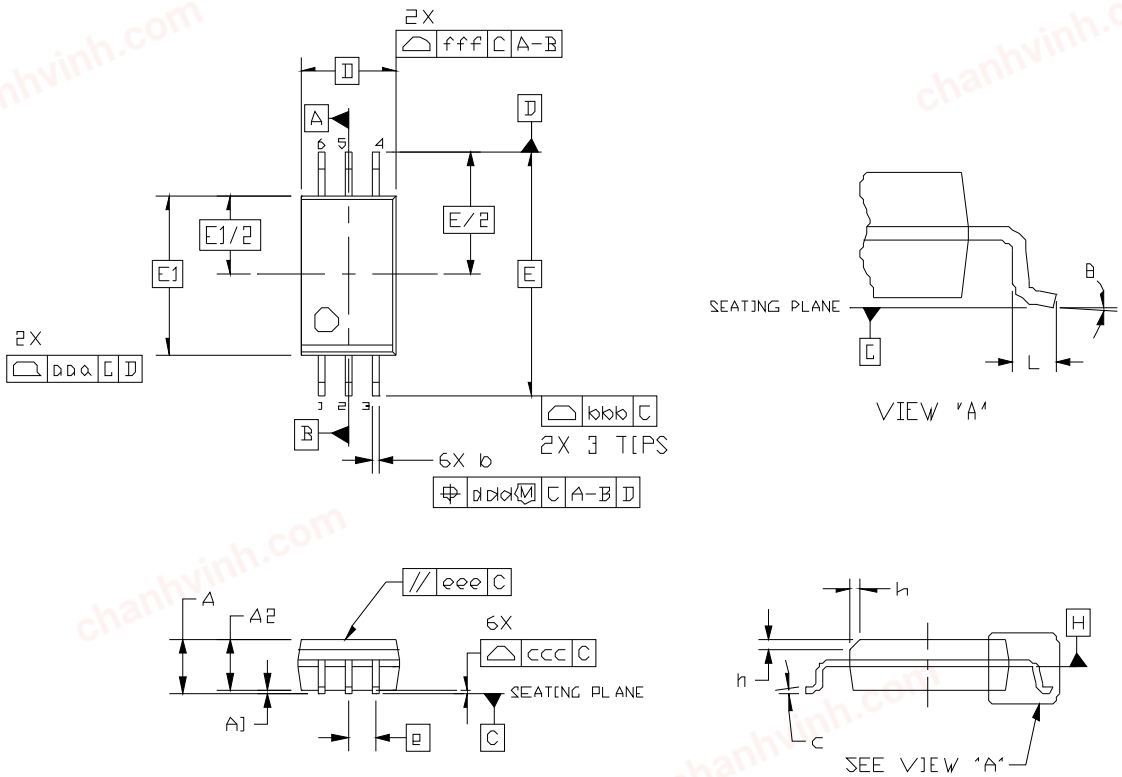

Figure 23. SDIP6 Package

Table 19. SDIP6 Package Diagram Dimensions

Dimension	Min	Max
A	—	2.65
A1	0.10	0.30
A2	2.05	—
b	0.31	0.51
c	0.20	0.33
D	4.58 BSC	
E	11.50 BSC	
E1	7.50 BSC	
e	1.27 BSC	

Notes:
1. All dimensions shown are in millimeters (mm) unless otherwise noted.
2. Dimensioning and Tolerancing per ANSI Y14.5M-1994.

chanhvinh.com

Table 19. SDIP6 Package Diagram Dimensions (Continued)

Dimension	Min	Max
L	0.40	1.27
h	0.25	0.75
θ	0°	8°
aaa	—	0.10
bbb	—	0.33
ccc	—	0.10
ddd	—	0.25
eee	—	0.10
fff	—	0.20

Notes:
1. All dimensions shown are in millimeters (mm) unless otherwise noted.
2. Dimensioning and Tolerancing per ANSI Y14.5M-1994.

chanhvinh.com

14. Land Pattern: SDIP6

Figure 24 illustrates the recommended land pattern details for the Si826x in an SDIP6 package. Table 20 lists the values for the dimensions shown in the illustration.

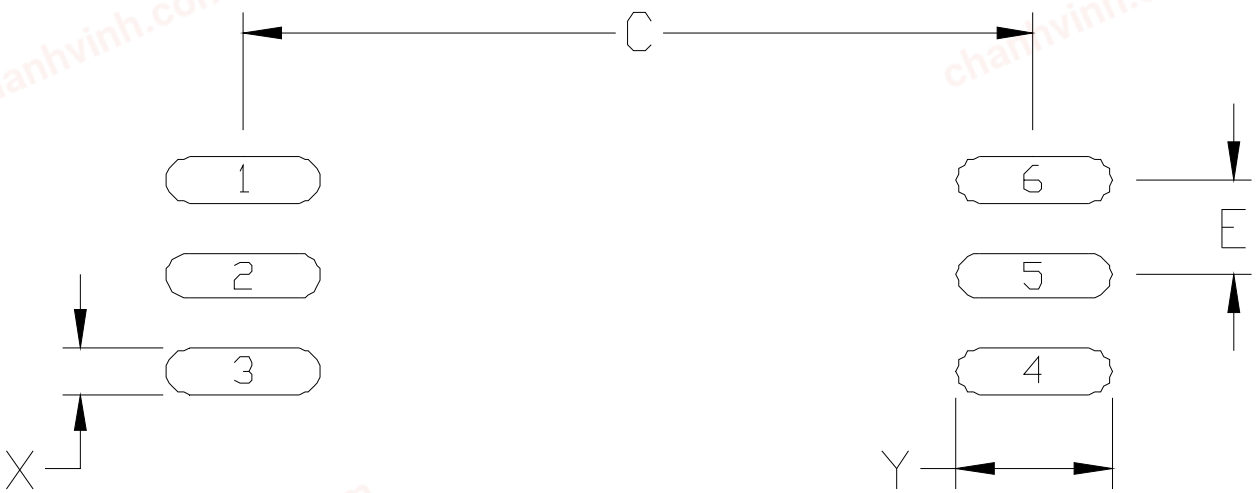

Figure 24. SDIP6 Land Pattern

Table 20. SDIP6 Land Pattern Dimensions*

Dimension	Min	Max
C	10.45	10.50
E	1.27 BSC	
X	0.55	0.60
Y	2.00	2.05
***Note:** This Land Pattern Design is based on the IPC-7351 specification.		

chanhvinh.com

15. Top Markings

15.1. Si826x Top Marking (Narrow Body SOIC)

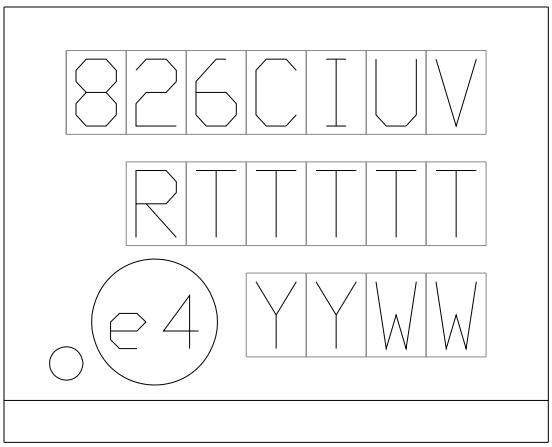

15.2. Top Marking Explanation

Line 1 Marking:	Customer Part Number	826 = ISOdriver product series C = Input configuration 1 = Opto input type I = Peak output current A = 0.6 A; B = 4.0 A U = UVLO level A = 5 V; B = 8 V; C = 12 V V = Isolation rating C = 3.75 kV; D = 5.0 kV
Line 2 Marking:	RTTTTT = Mfg Code	Manufacturing Code from the Assembly Purchase Order form. “R” indicates revision.
Line 3 Marking:	Circle = 43 mils Diameter Left-Justified	“e4” Pb-Free Symbol
	YY = Year WW = Work Week	Assigned by the Assembly House. Corresponds to the year and work week of the mold date.

chanhvinh.com

15.3. Si826x Top Marking (DIP8)

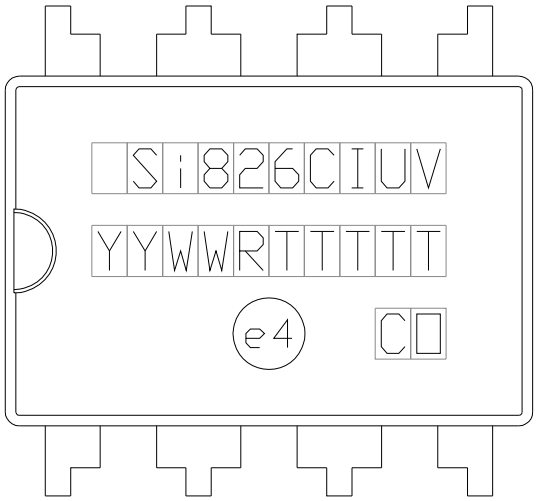

15.4. Top Marking Explanation

Line 1 Marking:	Customer Part Number	Si826 = ISOdriver product series C = Input configuration 1 = Opto input type I = Peak output current A = 0.6 A; B = 4.0 A U = UVLO level A = 5 V; B = 8 V; C = 12 V V = Isolation rating C = 3.75 kV; D = 5.0 kV
Line 2 Marking:	YY = Year WW = Work Week	Assigned by the Assembly House. Corresponds to the year and work week of the mold date.
	RTTTTT = Mfg Code	Manufacturing Code from the Assembly Purchase Order form. “R” indicates revision.
Line 3 Marking:	Circle = 51 mils Diameter Center-Justified	“e4” Pb-Free Symbol
	CO = Country of Origin	Country of Origin ISO Code Abbreviation

chanhvinh.com

15.5. Si826x Top Marking (SDIP6)

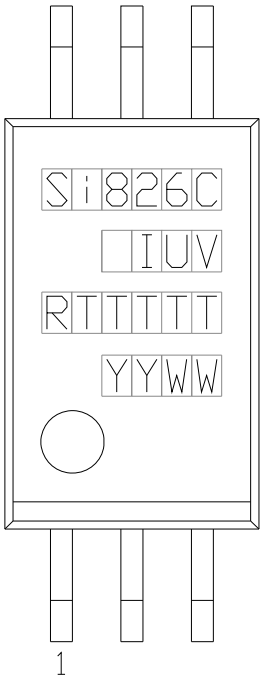

15.6. Top Marking Explanation

Line 1 Marking:	Device	Si826 = ISOdriver product series C = Input configuration 1 = Opto input type
Line 2 Marking:	Device Rating	I = Peak output current A = 0.6 A; B = 4.0 A U = UVLO level A = 5 V; B = 8 V; C = 12 V V = Isolation rating C = 3.75 kV; D = 5.0 kV
Line 3 Marking:	RTTTTT = Mfg Code	Manufacturing Code from the Assembly Purchase Order form. “R” indicates revision.
Line 4 Marking:	YY = Year WW = Work Week	Assigned by the Assembly House. Corresponds to the year and work week of the mold date.

chanhvinh.com

Document Change List

Revision 0.9 to Revision 1.0

- Updated Table 2 on page 4.
- Added Figure 1 on page 7.
- Updated "3.1.Theory of Operation" on page 15.
- Updated Figures 10, 11, and 12 on page 17.
- Removed “5.5. Parametric Differences between Si826x and HCPL-0302 and HCPL-3120 Opto Drivers”.

Revision 1.0 to Revision 1.1

- Updated Figure 1 on page 7.
- Updated Ordering Guide Table 13 on page 24.
  - Removed references to moisture sensitivity levels from table note.

Revision 1.1 to Revision 1.2

- Removed “Sampling” from Ordering Guide Table 13 on page 24.

Revision 1.2 to Revision 1.3

- Updated Table 3 on page 9.
  - Added CQC certificate numbers.
- Updated Table 5 on page 10.
  - Updated Rated Mains Voltage for 1000 V_{RMS} ratings.
- Updated Table 6 on page 10.
  - Removed V_{IOSM} specification.
- Updated Table 9 on page 14.
  - Replaced I_O with Peak Output Current I_{OPK}.
- Updated Figure 13 on page 18.
- Updated Figure 14 on page 18.
- Updated Figure 15 on page 19.
- Changed V_{DD} minimum throughout document to reflect 6.5 V, not 5 V, as normal operation.

Revision 1.3 to Revision 1.4

- Removed references to LGA8 throughout.
- Deleted all IEC 60747-5 and IEC 61010 references throughout and added VDE 0884-10 references throughout.
- Updated all certification body’s certificate and file reference numbers throughout.

Revision 1.4 to Revision 1.5

- Added Automotive-grade Ordering Guide and other introductory information.

Revision 1.5 to Revision 1.51

- Added Automotive-grade Ordering Guide
  - Si8261BBC-AP
  - Si8261BCC-AS
  - Si8261BCD-AS

chanhvinh.com

SKYWORKS®

Connecting Everyone and Everything, All the Time



Portfolio
www.skyworksinc.com

Quality
www.skyworksinc.com/quality

Support & Resources
www.skyworksinc.com/support

Copyright © 2021 Skyworks Solutions, Inc. All Rights Reserved.

Information in this document is provided in connection with Skyworks Solutions, Inc. ("Skyworks") products or services. These materials, including the information contained herein, are provided by Skyworks as a service to its customers and may be used for informational purposes only by the customer. Skyworks assumes no responsibility for errors or omissions in these materials or the information contained herein. Skyworks may change its documentation, products, services, specifications or product descriptions at any time, without notice. Skyworks makes no commitment to update the materials or information and shall have no responsibility whatsoever for conflicts, incompatibilities, or other difficulties arising from any future changes.

No license, whether express, implied, by estoppel or otherwise, is granted to any intellectual property rights by this document. Skyworks assumes no liability for any materials, products or information provided hereunder, including the sale, distribution, reproduction or use of Skyworks products, information or materials, except as may be provided in Skyworks' Terms and Conditions of Sale.

THE MATERIALS, PRODUCTS AND INFORMATION ARE PROVIDED "AS IS" WITHOUT WARRANTY OF ANY KIND, WHETHER EXPRESS, IMPLIED, STATUTORY, OR OTHERWISE, INCLUDING FITNESS FOR A PARTICULAR PURPOSE OR USE, MERCHANTABILITY, PERFORMANCE, QUALITY OR NON-INFRINGEMENT OF ANY INTELLECTUAL PROPERTY RIGHT; ALL SUCH WARRANTIES ARE HEREBY EXPRESSLY DISCLAIMED. SKYWORKS DOES NOT WARRANT THE ACCURACY OR COMPLETENESS OF THE INFORMATION, TEXT, GRAPHICS OR OTHER ITEMS CONTAINED WITHIN THESE MATERIALS. SKYWORKS SHALL NOT BE LIABLE FOR ANY DAMAGES, INCLUDING BUT NOT LIMITED TO ANY SPECIAL, INDIRECT, INCIDENTAL, STATUTORY, OR CONSEQUENTIAL DAMAGES, INCLUDING WITHOUT LIMITATION, LOST REVENUES OR LOST PROFITS THAT MAY RESULT FROM THE USE OF THE MATERIALS OR INFORMATION, WHETHER OR NOT THE RECIPIENT OF MATERIALS HAS BEEN ADVISED OF THE POSSIBILITY OF SUCH DAMAGE.

Skyworks products are not intended for use in medical, lifesaving or life-sustaining applications, or other equipment in which the failure of the Skyworks products could lead to personal injury, death, physical or environmental damage. Skyworks customers using or selling Skyworks products for use in such applications do so at their own risk and agree to fully indemnify Skyworks for any damages resulting from such improper use or sale.

Customers are responsible for their products and applications using Skyworks products, which may deviate from published specifications as a result of design defects, errors, or operation of products outside of published parameters or design specifications. Customers should include design and operating safeguards to minimize these and other risks. Skyworks assumes no liability for applications assistance, customer product design, or damage to any equipment resulting from the use of Skyworks products outside of Skyworks' published specifications or parameters.

Skyworks, the Skyworks symbol, Sky5®, SkyOne®, SkyBlue™, Skyworks Green™, Clockbuilder®, DSPLL®, ISOmodem®, ProSLIC®, and SiPHY® are trademarks or registered trademarks of Skyworks Solutions, Inc. or its subsidiaries in the United States and other countries. Third-party brands and names are for identification purposes only and are the property of their respective owners. Additional information, including relevant terms and conditions, posted at www.skyworksinc.com, are incorporated by reference.

Skyworks Solutions, Inc. | Nasdaq: SWKS | sales@skyworksinc.com | www.skyworksinc.com
USA: 781-376-3000 | Asia: 886-2-2735 0399 | Europe: 33 (0)1 43548540 |