chanhvinh.com

Si7050/1/3/4/5-A20/1

I²C Temperature Sensors

Features

- High Accuracy Temperature Sensors
  - Si7051: ±0.1 °C (max)
  - Si7053: ±0.3 °C (max)
  - Si7054: ±0.4 °C (max)
  - Si7055: ±0.5 °C (max)
  - Si7050: ±1.0 °C (max)
- Wide operating voltage (1.9 to 3.6 V)
- –40 to +125 °C operating range
- Accuracy maintained over the entire operating temperature and voltage range
- Low Power Consumption
  - 195 nA average current @ 1 Hz sample rate
- 14-bit resolution
- Factory calibrated
- I²C interface
- 3x3 mm DFN package

Applications

- HVAC/R
- Thermostats
- White goods
- Computer equipment
- Portable consumer devices
- Asset tracking
- Cold chain storage
- Battery protection
- Industrial controls
- Medical equipment

Description

The Si705x Digital Temperature Sensors offer industry-leading low power consumption and high accuracy across the entire operating voltage and temperature range. These monolithic CMOS ICs feature a band-gap temperature sensor element, an analog-to-digital converter with up to 14-bit resolution, signal processing, calibration data, and an I²C interface. The patented use of novel signal processing and analog design enables the sensors to maintain their accuracy over a wide temperature and voltage range, while consuming very little current.

The temperature sensors are factory-calibrated and the calibration data is stored in the on-chip non-volatile memory. This ensures that the sensors are fully interchangeable, with no recalibration or software changes required.

The Si705x devices are available in a 3x3 mm DFN package, and the industry-standard I²C interface can operate at up to 400 kHz. Requiring just 195 nA of average current when sampled once per second, the Si705x can operate for several years with just a single coin cell battery.

The Si705x devices offer an accurate, low-power, factory-calibrated digital solution ideal for measuring temperature in applications ranging from HVAC/R and asset tracking to industrial and consumer platforms.



Ordering Information:

See page 19.

Pin Assignments

Top View

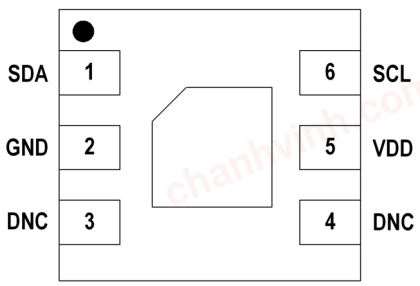

Patent Protected. Patents pending

Copyright © 2021 by Silicon Laboratories

chanhvinh.com

Functional Block Diagram

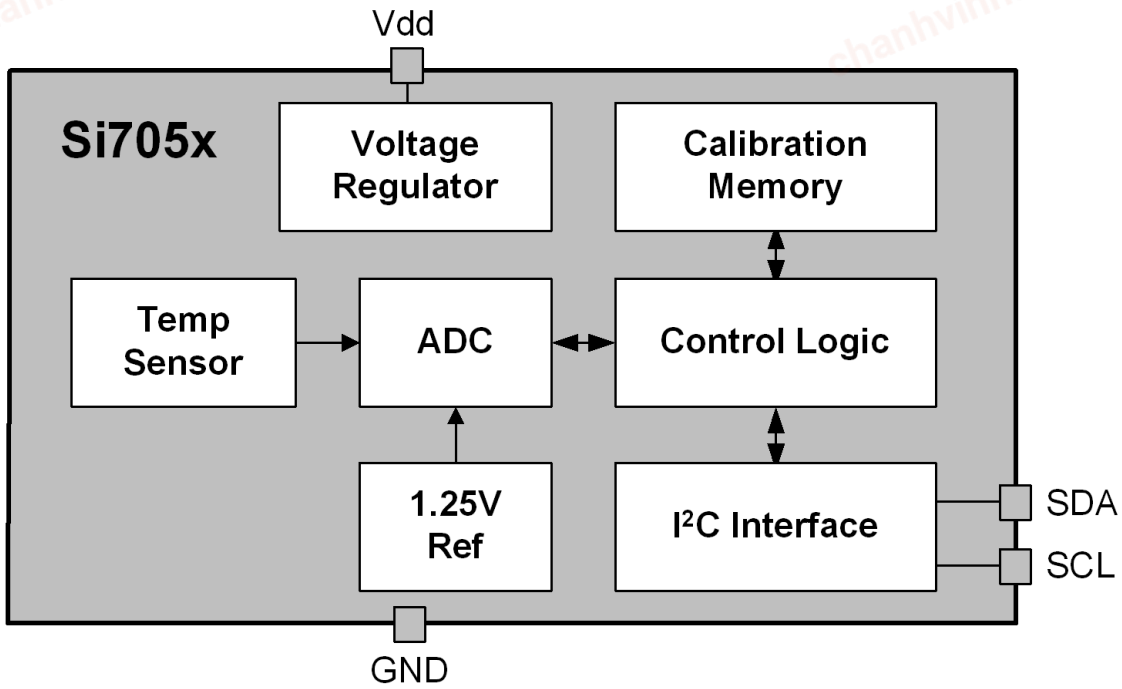

chanhvinh.com

TABLE OF CONTENTS

Section **Page**

1. Electrical Specifications 4
2. Typical Application Circuits 9
3. Bill of Materials 10
4. Functional Description 11
5. I2C Interface 12
5.1. Issuing a Measurement Command 13
5.2. Reading and Writing User Registers 14
5.3. Electronic Serial Number 15
5.4. Firmware Revision 16
6. Control Registers 17
6.1. Register Descriptions 17
7. Pin Descriptions: Si705x (Top View) 18
8. Ordering Guide 19
9. Package Outline 20
9.1. Package Outline: 3x3 6-Pin DFN 20
10. PCB Land Pattern and Solder Mask Design 21
11. Top Marking 22
11.1. Si705x Top Marking 22
11.2. Top Marking Explanation 22
11.3. Si7055-A20-ZM (Matte Tin Finish Lead Frame) Top Marking 23
11.4. Si7055-A20-ZM (Matte Tin Finish Lead Frame) Top Marking Explanation 23
12. Additional Reference Resources 24
Document Change List 25

chanhvinh.com

1. Electrical Specifications

Unless otherwise specified, all min/max specifications apply over the recommended operating conditions.

Table 1. Recommended Operating Conditions

Parameter	Symbol	Test Condition	Min	Typ	Max	Unit
Power Supply	V_{DD}		1.9	—	3.6	V
Operating Temperature	T_A		–40	—	+125	°C

Table 2. General Specifications

1.9 ≤ V_{DD} ≤ 3.6 V; T_A = –40 to 125 °C default conversion time unless otherwise noted.

Parameter	Symbol	Test Condition	Min	Typ	Max	Unit
Input Voltage High	V_{IH}	SCL, SDA pins	0.7 x V_{DD}	—	—	V
Input Voltage Low	V_{IL}	SCL, SDA pins	—	—	0.3 x V_{DD}	V
Input Voltage Range	V_{IN}	SCL, SDA pins with respect to GND	0.0	—	V_{DD}	V
Input Leakage	I_{IL}	SCL, SDA pins	—	—	1	µA
Output Voltage Low	V_{OL}	SDA pin; I_{OL} = 2.5 mA; V_{DD} = 3.3 V	—	—	0.6	V
		SDA pin; I_{OL} = 1.2 mA; V_{DD} = 1.9 V	—	—	0.4	V
Current Consumption	I_{DD}	Temperature conversion in progress	—	90	120	µA
		Standby, –40 to +85 °C[1]	—	0.06	0.62	µA
		Standby, –40 to +125 °C[1]	—	0.06	3.8	µA
		Peak IDD during powerup[2]	—	3.5	4.0	mA
		Peak IDD during I^2C operations[3]	—	3.5	4.0	mA
Conversion Time	t_{CONV}	14-bit temperature	—	7	10.8	ms
		13-bit temperature	—	4	6.2	ms
		12-bit temperature	—	2.4	3.8	ms
		11-bit temperature	—	1.5	2.4	ms
Powerup Time	t_{PU}	From V_{DD} ≥ 1.9 V to ready for a conversion, 25 °C	—	18	25	ms
		From V_{DD} ≥ 1.9 V to ready for a conversion, full temperature range	—	—	80	
		After issuing a software reset command	—	5	15	

Notes:
1. No conversion or I^2C transaction in progress. Typical values measured at 25 °C.
2. Occurs once during powerup. Duration is <5 msec.
3. Occurs during I^2C commands for Reset, Read/Write User Registers, Read EID, and Read Firmware Version. Duration is <100 µs when I^2C clock speed is >100 kHz (>200 kHz for 2-byte commands).

chanhvinh.com

Table 3. I²C Interface Specifications[1]

1.9 ≤ V_{DD} ≤ 3.6 V; T_A = –40 to +125 °C unless otherwise noted.

Parameter	Symbol	Test Condition	Min	Typ	Max	Unit
Hysteresis	V_{HYS}	High-to-low versus low-to-high transition	0.05 x V_{DD}	—	—	V
SCLK Frequency[2]	f_{SCL}		—	—	400	kHz
SCL High Time	t_{SKH}		0.6	—	—	µs
SCL Low Time	t_{SKL}		1.3	—	—	µs
Start Hold Time	t_{STH}		0.6	—	—	µs
Start Setup Time	t_{STS}		0.6	—	—	µs
Stop Setup Time	t_{SPS}		0.6	—	—	µs
Bus Free Time	t_{BUF}	Between Stop and Start	1.3	—	—	µs
SDA Setup Time	t_{DS}		100	—	—	ns
SDA Hold Time	t_{DH}		100	—	—	ns
SDA Valid Time	$t_{VD;DAT}$	From SCL low to data valid	—	—	0.9	µs
SDA Acknowledge Valid Time	$t_{VD;ACK}$	From SCL low to data valid	—	—	0.9	µs
Suppressed Pulse Width[3]	t_{SPS}		50	—	—	ns

Notes:

1. All values are referenced to V_{IL} and/or V_{IH}.
2. Depending on the conversion command, the Si705x may hold the master during the conversion (clock stretch). At above 100 kHz SCL, the Si705x may also hold the master briefly for user register and device ID transactions. At the highest I²C speed of 400 kHz the stretching will be <10 µs.
3. Pulses up to and including 50 ns will be suppressed.

chanhvinh.com

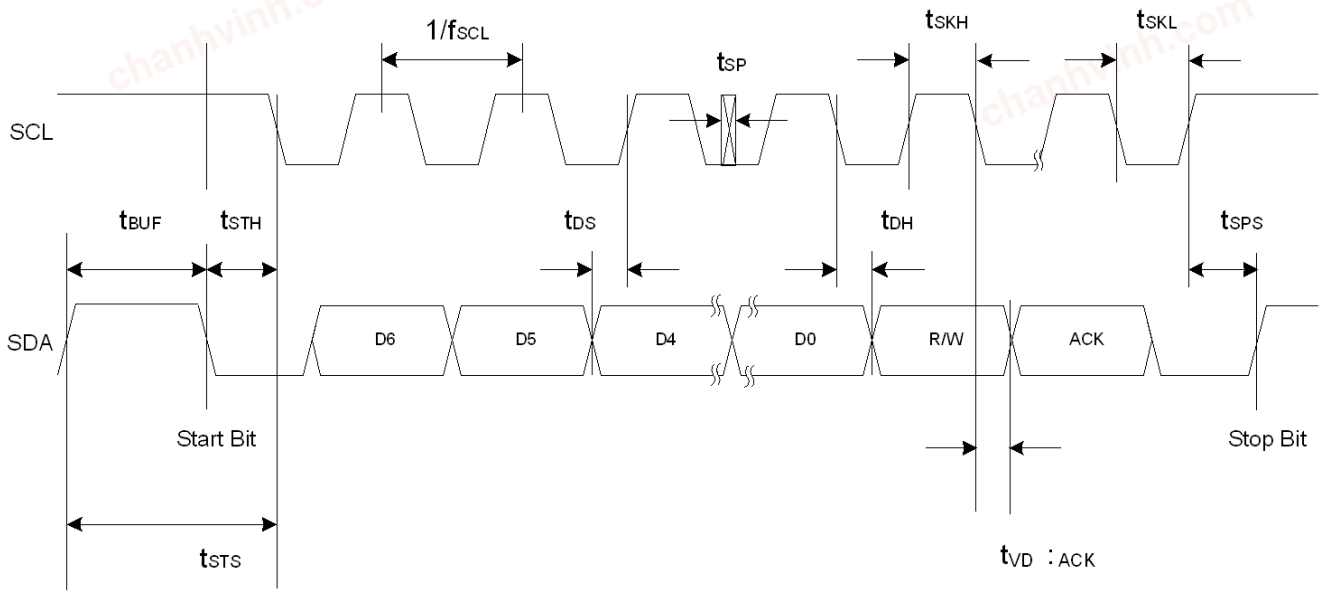

Figure 1. I²C Interface Timing Diagram

chanhvinh.com

Table 4. Temperature Sensor

1.9 ≤ V_{DD} ≤ 3.6 V; T_A = –40 to +125 °C default conversion time unless otherwise noted.

Parameter	Symbol	Test Condition	Min	Typ	Max	Unit
Operating Range			–40	—	+125	°C
Accuracy[1]		Si7051	—	—	±0.1[2]	°C
		Si7053	—	±0.2	±0.3	°C
		Si7054	—	±0.3	±0.4	°C
		Si7055	—	±0.4	±0.5	°C
		Si7050	—	±0.5	±1.0	°C
Repeatability/Noise		14-bit resolution	—	0.01	—	°C RMS
		13-bit resolution	—	0.02	—	
		12-bit resolution	—	0.04	—	
		11-bit resolution	—	0.08	—	
Response Time[3]	$T_{63\%}$	Unmounted device	—	0.7	—	s
		Si705x-EB board	—	5.1	—	s
Long Term Stability			—	≤ 0.01	—	°C/Yr

Notes:

1. 14b measurement resolution (default). Values apply to the full operating temperature and voltage range of the device.
2. ±0.1 °C: +35.8 °C to 41 °C; ±0.13 °C: 20.0 °C to 70.0 °C; ±0.25 °C: –40 °C to +125 °C.
3. Time to reach 63% of final value in response to a step change in temperature. Actual response time will vary dependent on system thermal mass and air-flow.

chanhvinh.com

Table 5. Thermal Characteristics

Parameter	Symbol	Test Condition	DFN-6	Unit
Junction to Air Thermal Resistance	θ_{JA}	JEDEC 2-Layer board, No Airflow	256	°C/W
Junction to Air Thermal Resistance	θ_{JA}	JEDEC 2-Layer board, 1 m/s Airflow	224	°C/W
Junction to Air Thermal Resistance	θ_{JA}	JEDEC 2-Layer board, 2.5 m/s Airflow	205	°C/W
Junction to Case Thermal Resistance	θ_{JC}	JEDEC 2-Layer board	22	°C/W
Junction to Board Thermal Resistance	θ_{JB}	JEDEC 2-Layer board	134	°C/W

Table 6. Absolute Maximum Ratings[1]

Parameter	Symbol	Test Condition	Min	Typ	Max	Unit
Ambient temperature under bias			–55	—	125	°C
Storage Temperature[2]			–65	—	150	°C
Voltage on I/O pins			–0.3	—	VDD+0.3 V	V
Voltage on VDD with respect to GND			–0.3		4.2	V
ESD Tolerance		HBM	—	—	2	kV
		CDM	—	—	1.25	kV
		MM	—	—	250	V

Notes:
1. Absolute maximum ratings are stress ratings only, operation at or beyond these conditions is not implied and may shorten the life of the device or alter its performance.
2. Special handling considerations apply; see application note, “AN607: Si70xx Humidity and Temperature Sensor Designer’s Guide”.

chanhvinh.com

2. Typical Application Circuits

Figure 2 demonstrates the typical application circuit for Si705x sensors.

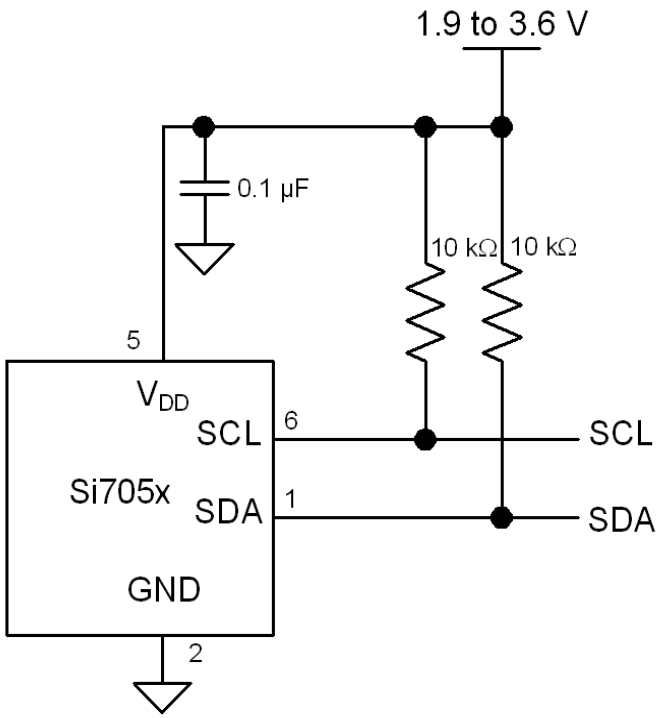

Figure 2. Typical Application Circuit for Temperature Measurement

chanhvinh.com

3. Bill of Materials

Table 7. Typical Application Circuit BOM for Temperature Measurement

Reference	Description	Mfr Part Number	Manufacturer
R1	Resistor, 10 kΩ, ±5%, 1/16 W, 0603	CR0603-16W-103JT	Venkel
R2	Resistor, 10 kΩ, ±5%, 1/16 W, 0603	CR0603-16W-103JT	Venkel
C1	Capacitor, 0.1 µF, 16 V, X7R, 0603	C0603X7R160-104M	Venkel
U1	IC, Digital Temperature Sensor	Si705x-A20-IM	Silicon Labs

chanhvinh.com

4. Functional Description

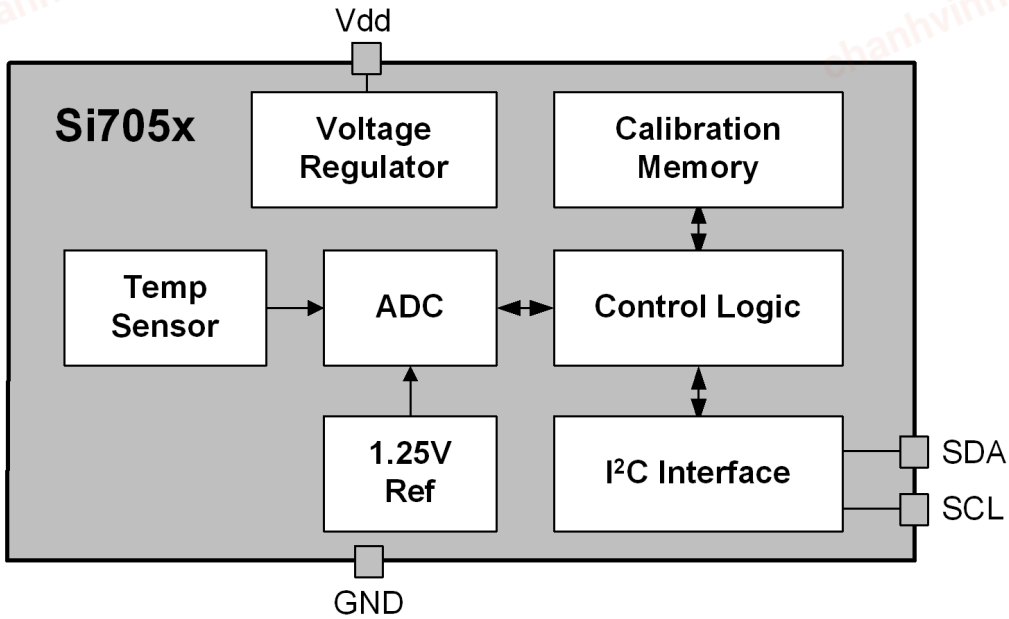

Figure 3. Si705x Block Diagram

The Si705x Digital Temperature Sensors offer industry-leading low power consumption and high accuracy across the entire operating voltage and temperature range. These monolithic CMOS ICs feature a band-gap temperature sensor element, an analog-to-digital converter with up to 14-bit resolution, signal processing, calibration data, and an I^2C interface. The patented use of novel signal processing and analog design enables the sensors to maintain their accuracy over a wide temperature and voltage range, while consuming very little current.

The temperature sensors are factory-calibrated and the calibration data is stored in the on-chip non-volatile memory. This ensures that the sensors are fully interchangeable, with no recalibration or software changes required.

The Si705x devices are available in a 3x3 mm DFN package, and the industry-standard I^2C interface can operate at up to 400 kHz. Requiring just 195nA of average current when sampled once per second, the Si705x can operate for several years with just a single coin cell battery.

The Si705x devices offer an accurate, low-power, factory-calibrated digital solution ideal for measuring temperature in applications ranging from HVAC/R and asset tracking to industrial and consumer platforms.

chanhvinh.com

5. I²C Interface

The Si705x communicates with the host controller over a digital I²C interface. The 7-bit base slave address is 0x40 or 0x70 depending on the OPN (see "8. Ordering Guide" on page 19). When sending commands to the device, the R/W bit is set high for a read command and low for a write command.

Table 8. I²C Slave Address Byte

A6	A5	A4	A3	A2	A1	A0	R/W
1	0	0	0	0	0	0	0

Master I²C devices communicate with the Si705x using a command structure. The commands are listed in the I²C command table. Commands other than those documented below are undefined and should not be sent to the device. When sending commands to the device, the R/W bit is set high for a read command and low for a write command.

Table 9. I²C Command Table

Command Description	Command Code
Measure Temperature, Hold Master Mode	0xE3
Measure Temperature, No Hold Master Mode	0xF3
Reset	0xFE
Write User Register 1	0xE6
Read User Register 1	0xE7
Read Electronic ID 1st Byte	0xFA 0x0F
Read Electronic ID 2nd Byte	0xFC 0xC9
Read Firmware Revision	0x84 0xB8

chanhvinh.com

5.1. Issuing a Measurement Command

The measurement command instructs the Si705x to perform a temperature measurement. While the measurement is in progress, the option of either clock stretching (Hold Master Mode) or Not Acknowledging read requests (No Hold Master Mode) is available to indicate to the master that the measurement is in progress; the chosen command code determines which mode is used.

Optionally, a checksum byte can be returned from the slave for use in checking for transmission errors. The checksum byte will follow the least significant measurement byte if it is acknowledged by the master. The checksum byte is not returned if the master "not acknowledges" the least significant measurement byte. The checksum byte is calculated using a CRC generator polynomial of $x^8 + x^5 + x^4 + 1$, with an initialization of 0x00.

The checksum byte is optional after initiating a temperature measurement with commands 0xE3, and 0xF3. The checksum byte is required for reading the electronic ID with commands 0xFA 0x0F and 0xFC 0xC9. For all other commands, the checksum byte is not supported.

Table 10. I²C Bit Descriptions

Name	Symbol	Description
START	S	SDA goes low while SCL high
STOP	P	SDA goes high while SCL high
Repeated START	Sr	SDA goes low while SCL high. It is allowable to generate a STOP before the repeated start. SDA can transition to high before or after SCL goes high in preparation for generating the START.
READ	R	Read bit = 0
WRITE	W	Write bit = 1
All other bits	—	SDA value must remain high or low during the entire time SCL is high (this is the set up and hold time in Figure 1)

In the I²C sequence diagrams in the following sections, bits produced by the master and slave are color coded as shown:



Sequence to perform a measurement and read back result (Hold Master Mode)

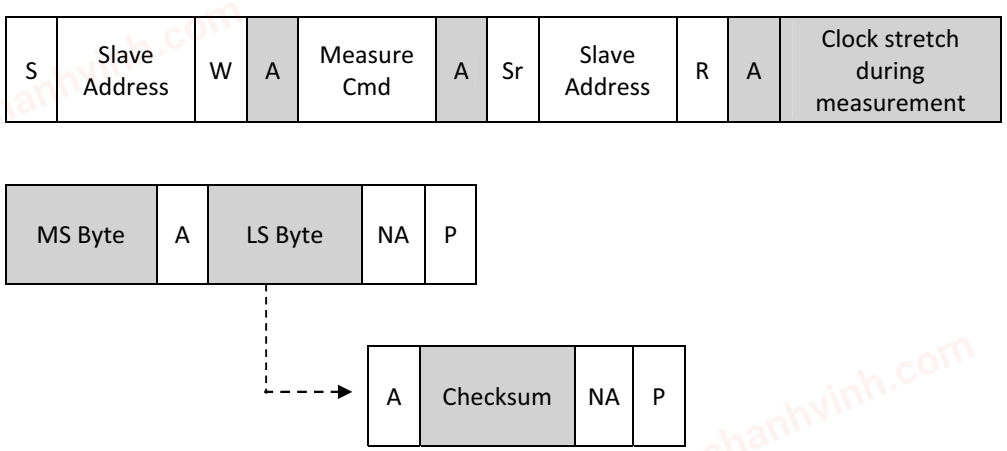

chanhvinh.com

Sequence to perform a measurement and read back result (No Hold Master Mode)

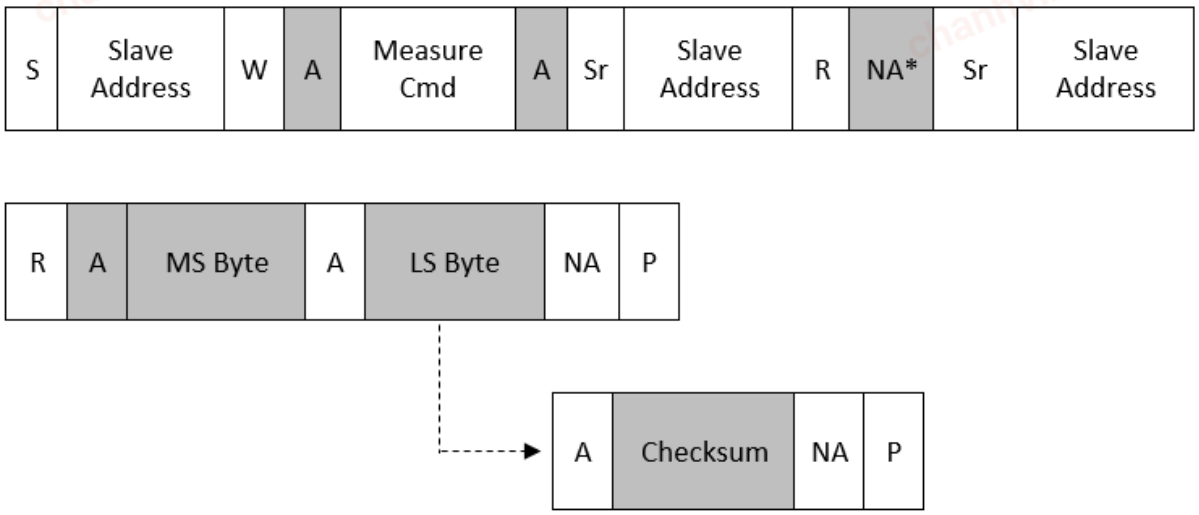

***Note:** Device will NACK the slave address byte until conversion is complete.

5.1.1. Measuring Temperature

The measure temperature commands 0xE3 and 0xF3 will perform a temperature measurement and return the measurement value.

The results of the temperature measurement may be converted to temperature in degrees Celsius (°C) using the following expression:

$$\text{Temperature (°C)} = \frac{175.72 * \text{Temp_Code}}{65536} - 46.85$$

Where:

Temperature (°C) is the measured temperature value in °C

Temp_Code is the 16-bit word returned by the Si705x

A temperature measurement will always return XXXXXX00 in the LSB field.

5.2. Reading and Writing User Registers

There is one user register on the Si705x that allows the user to set the configuration of the Si705x. The procedure for accessing that register is described below.

The checksum byte is not supported after reading a user register.

Sequence to read a register

S	Slave Address	W	A	Read Reg Cmd	A	Sr	Slave Address	R	A	Read Data	NA	P

Sequence to write a register

S	Slave Address	W	A	Write Reg Cmd	A	Write Data	A	P

chanhvinh.com

5.3. Electronic Serial Number

The Si705x provides a serial number individualized for each device that can be read via the I^2C serial interface.

Two I^2C commands are required to access the device memory and retrieve the complete serial number. The command sequence, and format of the serial number response is described in the figure below:

Master	Slave

First access:

S	Slave Address	W	ACK	0xFA	ACK	0X0F	ACK		
S	Slave Address	R	ACK						
	SNA_3	ACK	CRC	ACK	SNA_2	ACK	CRC	ACK	
	SNA_1	ACK	CRC	ACK	SNA_0	ACK	CRC	NACK	P

2nd access:

S	Slave Address	W	ACK	0xFC	ACK	0XC9	ACK
S	Slave Address	R	ACK				
	SNB_3	ACK	SNB_2	ACK	CRC	ACK	
	SNB_1	ACK	SNB_0	ACK	CRC	NACK	P

The format of the complete serial number is 64-bits in length, divided into 8 data bytes. The complete serial number sequence is shown below:

SNA_3	SNA_2	SNA_1	SNA_0	SNB_3	SNB_2	SNB_1	SNB_0

The SNB3 field contains the device identification to distinguish between the different Silicon Labs devices. The value of this field maps to the following devices according to this table:

0x00 or 0xFF engineering samples

50 = 0x32 = Si7050

51 = 0x33 = Si7051

53 = 0x35 = Si7053

54 = 0x36 = Si7054

55 = 0x37 = Si7055

chanhvinh.com

5.4. Firmware Revision

The internal firmware revision can be read with the following I²C transaction:

S	Slave Address	W	A	0x84	A	0xB8	A	S	Slave Address

R	A	FWREV	NA	P

The values in this field are encoded as follows:

0xFF = Firmware version 1.0

0x20 = Firmware version 2.0

chanhvinh.com

6. Control Registers

Table 11. Register Summary

Register	Bit 7	Bit 6	Bit 5	Bit 4	Bit 3	Bit 2	Bit 1	Bit 0
User Register 1	RES1	VDDS	RSVD	RSVD	RSVD	RSVD	RSVD	RES0

Notes:
1. Any register not listed here is reserved and must not be written. The result of a read operation on these bits is undefined.
2. Except where noted, reserved register bits will always read back as "1," and are not affected by write operations. For future compatibility, it is recommended that prior to a write operation, registers should be read. Then the values read from the RSVD bits should be written back unchanged during the write operation.

6.1. Register Descriptions

Register 1. User Register 1

Bit	D7	D6	D5	D4	D3	D2	D1	D0
Name	RES1	VDDS	RSVD	RSVD	RSVD	RSVD	RSVD	RES0
Type	R/W	R	R/W	R/W		R/W	R/W	R/W

Reset Settings = 0011_1010

Bit	Name	Function
D7; D0	RES[1:0]	Measurement Resolution: 00: 14 bit 01: 12 bit 10: 13 bit 11: 11 bit
D6	VDDS	VDD Status: 0: V_{DD} OK 1: V_{DD} Low The minimum recommended operating voltage is 1.9 V. A transition of the VDD status bit from 0 to 1 indicates that VDD is between 1.8 V and 1.9 V. If the VDD drops below 1.8 V, the device will no longer operate correctly.
D5, D4, D3, D2, D1	RSVD	Reserved

chanhvinh.com

7. Pin Descriptions: Si705x (Top View)

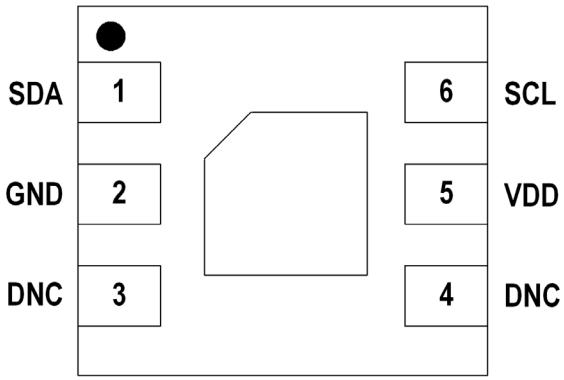

Pin Name	Pin #	Pin Description
SDA	1	I^2C data
GND	2	Ground. This pin is connected to ground on the circuit board through a trace. Do not connect directly to GND plane.
VDD	5	Power. This pin is connected to power on the circuit board.
SCL	6	I^2C clock
DNC	3,4	These pins should be soldered to pads on the PCB for mechanical stability; they can be electrically floating or tied to VDD (do not tie to GND).
T_{GND}	Paddle	This pad is connected to GND internally. This pad is the main thermal input to the on-chip temperature sensor. The paddle should be soldered to a floating pad.

chanhvinh.com

8. Ordering Guide

Table 12. Device Ordering Guide

Part Number	Description	Max. Accuracy	Pkg	Packing Format
Si7050-A20-IM	Digital temperature sensor	±1 °C	DFN 6	Cut Tape
Si7050-A20-IMR	Digital temperature sensor	±1 °C	DFN 6	Tape and Reel
Si7051-A20-IM	Digital temperature sensor	±0.1 °C	DFN 6	Cut Tape
Si7051-A20-IMR	Digital temperature sensor	±0.1 °C	DFN 6	Tape and Reel
Si7053-A20-IM	Digital temperature sensor	±0.3 °C	DFN 6	Cut Tape
Si7053-A20-IMR	Digital temperature sensor	±0.3 °C	DFN 6	Tape and Reel
Si7054-A20-IM	Digital temperature sensor	±0.4 °C	DFN 6	Cut Tape
Si7054-A20-IMR	Digital temperature sensor	±0.4 °C	DFN 6	Tape and Reel
Si7055-A20-IM	Digital temperature sensor	±0.5 °C	DFN 6	Cut Tape
Si7055-A20-IMR	Digital temperature sensor	±0.5 °C	DFN 6	Tape and Reel
Si7055-A21-IM	Digital temperature sensor	±0.5 °C	DFN 6	Cut Tape
Si7055-A21-IMR	Digital temperature sensor	±0.5 °C	DFN 6	Tape and Reel

Note: The “A” denotes product revision A and “20” denotes firmware version 2.0. Part Numbers with -A21 denotes an I2C address of 0x70.

chanhvinh.com

9. Package Outline

9.1. Package Outline: 3x3 6-Pin DFN

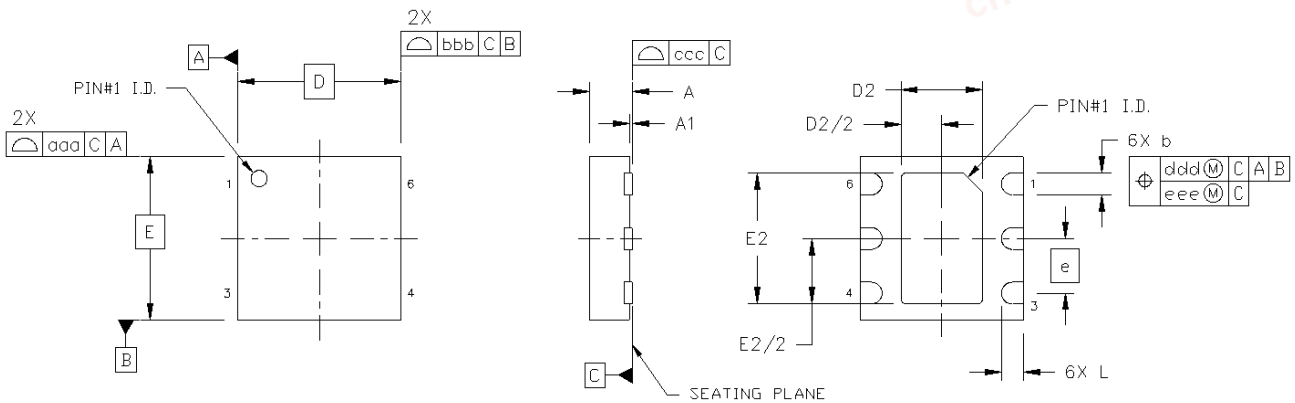

Figure 10. 3x3 6-pin DFN

Table 13. Package Diagram Dimensions

Dimension	Min	Nom	Max
A	0.70	0.75	0.80
A1	0.00	0.02	0.05
b	0.35	0.40	0.45
D		3.00 BSC.	
D2	1.40	1.50	1.60
e		1.00 BSC.	
E		3.00 BSC.	
E2	2.30	2.40	2.50
L	0.35	0.40	0.45
aaa		0.10	
bbb		0.10	
ccc		0.05	
ddd		0.10	
eee		0.05	

Notes:
1. All dimensions shown are in millimeters (mm).
2. Dimensioning and Tolerancing per ANSI Y14.5M-1994.

chanhvinh.com

10. PCB Land Pattern and Solder Mask Design

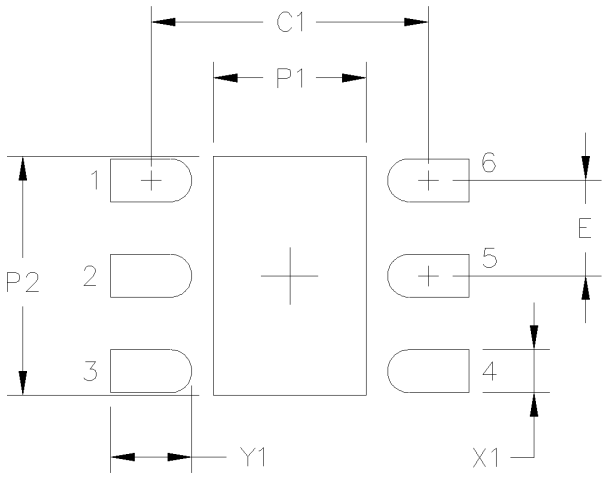

Figure 4. Si705x PCB Land Pattern

Table 14. PCB Land Pattern Dimensions

Symbol	mm
C1	2.90
E	1.00
P1	1.60
P2	2.50
X1	0.45
Y1	0.85

Notes:

General

1. All dimensions shown are at Maximum Material Condition (MMC). Least Material Condition (LMC) is calculated based on a Fabrication Allowance of 0.05 mm.
2. This Land Pattern Design is based on the IPC-7351 guidelines.

Solder Mask Design

3. All metal pads are to be non-solder mask defined (NSMD). Clearance between the solder mask and the metal pad is to be 60 µm minimum, all the way around the pad.

Stencil Design

4. A stainless steel, laser-cut and electro-polished stencil with trapezoidal walls should be used to assure good solder paste release.
5. The stencil thickness should be 0.125 mm (5 mils).
6. The ratio of stencil aperture to land pad size should be 1:1 for all perimeter pins.
7. A 2x1 array of 1.00 mm square openings on 1.30 mm pitch should be used for the center ground pad to achieve a target solder coverage of 50%.

Card Assembly

8. The recommended card reflow profile is per the JEDEC/IPC J-STD-020 specification for Small Body Components.

chanhvinh.com

11. Top Marking

11.1. Si705x Top Marking

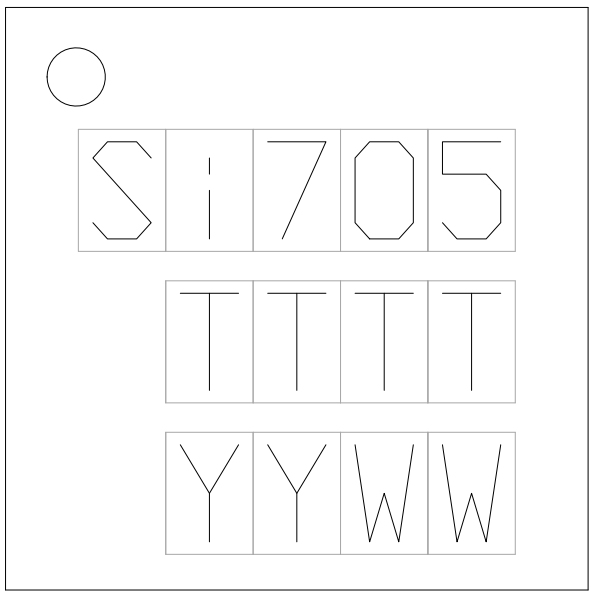

11.2. Top Marking Explanation

Mark Method:	Laser	
Pin 1 Mark:	Circle = 0.30 mm Diameter (Upper-Left Corner)	
Font Size:	0.05 mm	
Line 1 Mark Format:	Device Code	Si705
Line 2 Mark Format:	TTTT	Manufacturing Code from the Assembly Purchase Order form.
Line 3 Mark Format:	YY = Year WW = Work Week	Assigned by the Assembly House. Corresponds to the year and work week of the assembly release.

chanhvinh.com

11.3. Si7055-A20-ZM (Matte Tin Finish Lead Frame) Top Marking

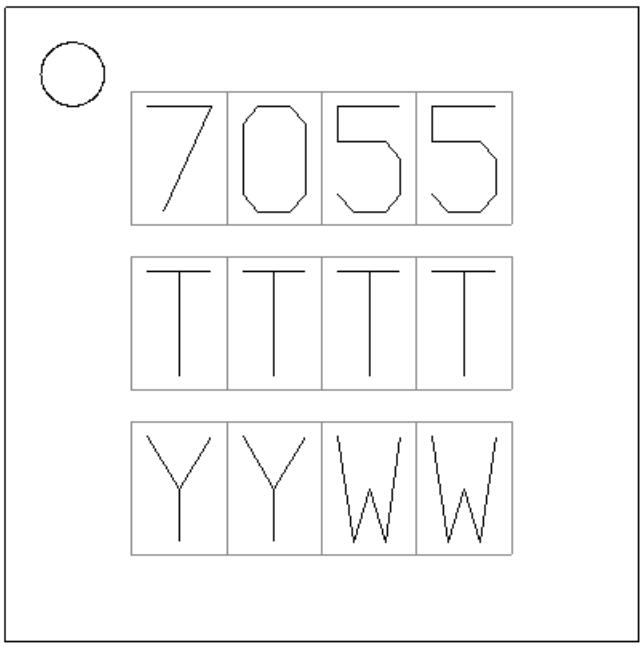

11.4. Si7055-A20-ZM (Matte Tin Finish Lead Frame) Top Marking Explanation

Mark Method:	Laser	
Pin 1 Mark:	Circle = 0.30 mm Diameter (Upper-Left Corner)	
Font Size:	0.05 mm	
Line 1 Mark Format:	Device Code	Si7055
Line 2 Mark Format:	TTTT	Manufacturing Code from the Assembly Purchase Order form.
Line 3 Mark Format:	YY = Year WW = Work Week	Assigned by the Assembly House. Corresponds to the year and work week of the assembly release.

chanhvinh.com

12. Additional Reference Resources

- AN607: Si70xx Humidity and Temperature Sensor Designer's Guide

chanhvinh.com

chanhvinh.com

Document Change List

Revision 0.9 to Revision 1.0

- Updated Section "5. I2C Interface" on page 12
- Updated Table 12, “Device Ordering Guide,” on page 19

Revision 1.0 to Revision 1.1

- Added part number Si7051
- Updated "9. Package Outline" on page 20

Revision 1.1 to Revision 1.11

- Added new OPN: Si7055-A20-ZM with matte tin finish lead frame

Revision 1.11 to Revision 1.12

- Removed erroneous typical value for Si7051 accuracy from Table 4.

Revision 1.12 to Revision 1.13

- Removed “YM0” and “YM0R” automotive qualified part numbers from Table 12, “Device Ordering Guide,” on page 19.

Revision 1.13 to Revision 1.14

- Updated “No Hold Master Mode” diagram in "5.1. Issuing a Measurement Command" on page 13.
- Updated diagram in "5.4. Firmware Revision" on page 16.‘
- Updated notes in Table 14, “PCB Land Pattern Dimensions,” on page 21.

Revision 1.14 to Revision 1.15

- Updated Table 12, “Device Ordering Guide,” on page 19.

Revision 1.15 to Revision 1.2

- Updated "8. Ordering Guide" on page 19 to include Si7055-A21-IM and Si7055-A21-IMR part numbers.

chanhvinh.com



IoT Portfolio
www.silabs.com/products

Quality
www.silabs.com/quality

Support & Community
www.silabs.com/community

Disclaimer
Silicon Labs intends to provide customers with the latest, accurate, and in-depth documentation of all peripherals and modules available for system and software implementers using or intending to use the Silicon Labs products. Characterization data, available modules and peripherals, memory sizes and memory addresses refer to each specific device, and "Typical" parameters provided can and do vary in different applications. Application examples described herein are for illustrative purposes only. Silicon Labs reserves the right to make changes without further notice to the product information, specifications, and descriptions herein, and does not give warranties as to the accuracy or completeness of the included information. Without prior notification, Silicon Labs may update product firmware during the manufacturing process for security or reliability reasons. Such changes will not alter the specifications or the performance of the product. Silicon Labs shall have no liability for the consequences of use of the information supplied in this document. This document does not imply or expressly grant any license to design or fabricate any integrated circuits. The products are not designed or authorized to be used within any FDA Class III devices, applications for which FDA premarket approval is required or Life Support Systems without the specific written consent of Silicon Labs. A "Life Support System" is any product or system intended to support or sustain life and/or health, which, if it fails, can be reasonably expected to result in significant personal injury or death. Silicon Labs products are not designed or authorized for military applications. Silicon Labs products shall under no circumstances be used in weapons of mass destruction including (but not limited to) nuclear, biological or chemical weapons, or missiles capable of delivering such weapons. Silicon Labs disclaims all express and implied warranties and shall not be responsible or liable for any injuries or damages related to use of a Silicon Labs product in such unauthorized applications.
Note: This content may contain offensive terminology that is now obsolete. Silicon Labs is replacing these terms with inclusive language wherever possible. For more information, visit www.silabs.com/about-us/inclusive-lexicon-project

Trademark Information
Silicon Laboratories Inc.®, Silicon Laboratories®, Silicon Labs®, SiLabs® and the Silicon Labs logo®, Bluegiga®, Bluegiga Logo®, EFM®, EFM32®, EFR, Ember®, Energy Micro, Energy Micro logo and combinations thereof, "the world's most energy friendly microcontrollers", Redpine Signals®, WiSeConnect , n-Link, ThreadArch®, EZLink®, EZRadio®, EZRadioPRO®, Gecko®, Gecko OS, Gecko OS Studio, Precision32®, Simplicity Studio®, Telegesis, the Telegesis Logo®, USBXpress® , Zentri, the Zentri logo and Zentri DMS, Z-Wave®, and others are trademarks or registered trademarks of Silicon Labs. ARM, CORTEX, Cortex-M3 and THUMB are trademarks or registered trademarks of ARM Holdings. Keil is a registered trademark of ARM Limited. Wi-Fi is a registered trademark of the Wi-Fi Alliance. All other products or brand names mentioned herein are trademarks of their respective holders.

SILICON LABS

Silicon Laboratories Inc.
400 West Cesar Chavez
Austin, TX 78701
USA

www.silabs.com