chanhvinh.com

SIEMENS

Data sheet 3SU1401-1BF24-1AA0



LED module w. indicator lights with integrated LED 230 V AC, red-yellow-green, screw terminal, for front plate mounting

product brand name	SIRIUS ACT
product designation	LED module
product type designation	3SU1
General technical data	
product component	
● diode	Yes
● lamp transformer	No
● light source	Yes
● series resistor	No
insulation voltage rated value	320 V
degree of pollution	3
type of voltage of the operating voltage	AC/DC
● for actuation	AC/DC
surge voltage resistance rated value	4 kV
consumed current maximum	20 mA
protection class IP	
● of the enclosure	IP40
● of the terminal	IP20, clamping screw tightened
shock resistance	
● **according to IEC 60068-2-27**	sinusoidal half-wave 15g / 11 ms
● for railway applications according to EN 61373	Category 1, Class B
operating period typical	100 000 h
reference code according to IEC 81346-2	P
Substance Prohibitance (Date)	10/01/2014
SVHC substance name	Bleimonoxid (Bleioxid) - 1317-36-8 2-Methyl-1-(4-methylthiophenyl)-2-morpho - 71868-10-5
operating voltage 1	
● at AC	
— at 50 Hz rated value	230 V
● at DC rated value	230 V
relative positive tolerance of the operating voltage	20 %
relative negative tolerance of the operating voltage	10 %
Control circuit/ Control	
inrush current maximum	2 A
Connections/ Terminals	
type of electrical connection	screw-type terminals
type of connectable conductor cross-sections	
● solid with core end processing	2x (0.5 ... 0.75 mm²)
● solid without core end processing	2x (1.0 ... 1.5 mm²)
● finely stranded with core end processing	2x (0.5 ... 1.5 mm²)

Subject to change without notice
© Copyright Siemens

chanhvinh.com

● finely stranded without core end processing	2x (1,0 ... 1,5 mm²)
● for AWG cables	2x (18 ... 14)
connectable conductor cross-section finely stranded with core end processing	0.5 ... 1.5 mm²
tightening torque with screw-type terminals	0.8 ... 0.9 N·m

Lamp	
type of light source	LED
color of the light source	red/yellow/ green
certificate of suitability	
● ATEX	No
● IECEx	No

Ambient conditions	
ambient temperature	
● during operation	-25 ... +70 °C
● during storage	-40 ... +80 °C
environmental category during operation according to IEC 60721	3M6, 3S2, 3B2, 3K6 (with relative air humidity of 10 ... 95%, no condensation in operation permitted)

Environmental footprint	
Environmental Product Declaration(EPD)	Yes
Global Warming Potential [CO2 eq] total	0.787 kg
Global Warming Potential [CO2 eq] during manufacturing	0.566 kg
Global Warming Potential [CO2 eq] during operation	0.235 kg
global warming potential [CO2 eq] after end of life	-0.015 kg

Installation/ mounting/ dimensions	
fastening method	
● of modules and accessories	Front plate mounting
height	36 mm
width	9.8 mm
depth	49.7 mm

Approvals Certificates

General Product Approval	EMC	Declaration of Conformity
Confirmation		

Test Certificates		Marine / Shipping			
Type Test Certificates/Test Report	Special Test Certificate				

other	Environment
Confirmation	Environmental Confirmations

Further information

Siemens has decided to exit the Russian market (see here).
https://press.siemens.com/global/en/pressrelease/siemens-wind-down-russian-business
Siemens is working on the renewal of the current EAC certificates.
Please contact your local Siemens office on the status of validity of the EAC certification if you intend to import or offer to supply these products to an EAC relevant market (other than the sanctioned EAEU member states Russia or Belarus).
Information on the packaging
https://support.industry.siemens.com/cs/ww/en/view/109813875
Information- and Downloadcenter (Catalogs, Brochures,…)
https://www.siemens.com/ic10
Industry Mall (Online ordering system)
https://mall.industry.siemens.com/mall/en/en/Catalog/product?mlfb=3SU1401-1BF24-1AA0

Subject to change without notice
© Copyright Siemens

chanhvinh.com

Cax online generator
http://support.automation.siemens.com/WW/CAXorder/default.aspx?lang=en&mlfb=3SU1401-1BF24-1AA0
Service&Support (Manuals, Certificates, Characteristics, FAQs,...)
https://support.industry.siemens.com/cs/ww/en/ps/3SU1401-1BF24-1AA0
Image database (product images, 2D dimension drawings, 3D models, device circuit diagrams, EPLAN macros, ...)
http://www.automation.siemens.com/bilddb/cax_de.aspx?mlfb=3SU1401-1BF24-1AA0&lang=en

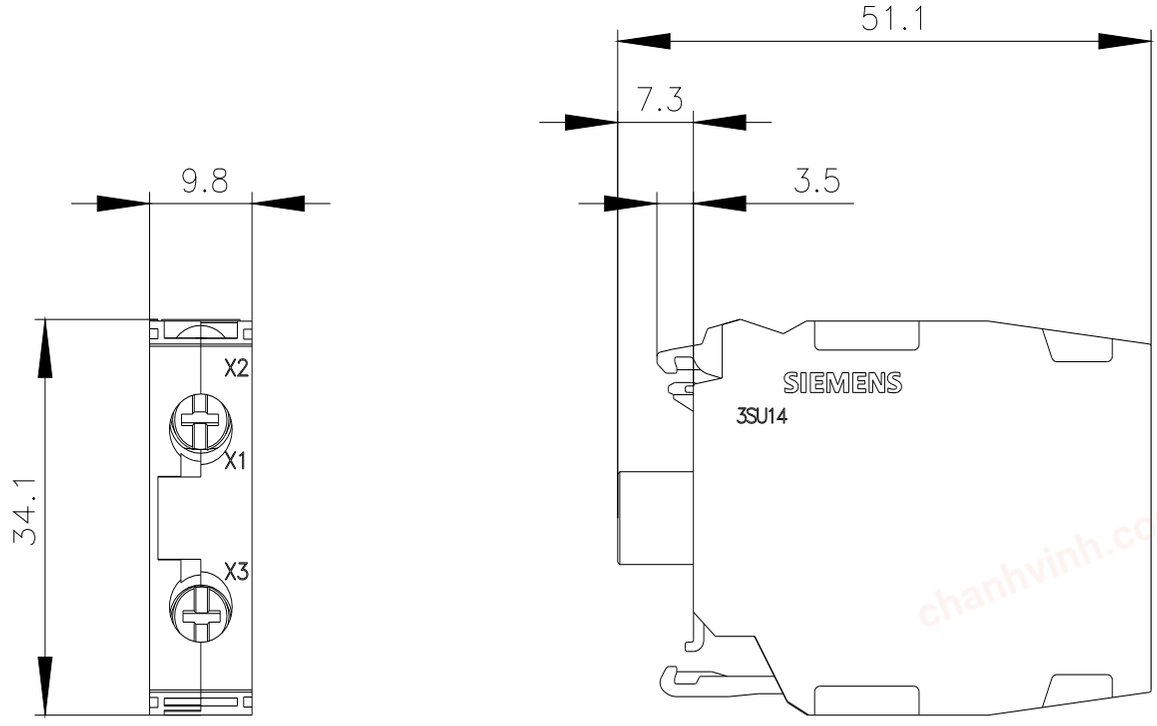

Subject to change without notice
© Copyright Siemens

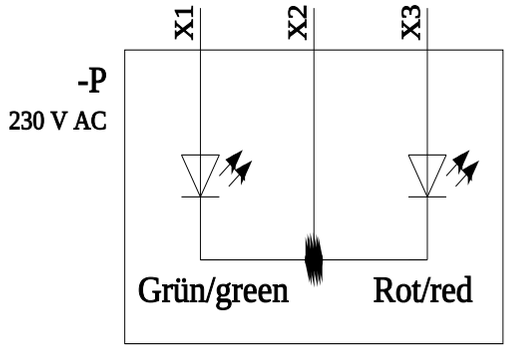

X1	X2	X3	Farbe/color
X	X		Grün/green
	X	X	Rot/red
X	X	X	Gelb/yellow

last modified: 11/9/2023

Subject to change without notice
© Copyright Siemens