chanhvinh.com

SIEMENS

Data sheet 3SU1100-7BF10-1QA0

Siemens EcoTech

Coordinate switch, 22 mm, round, plastic, black, 4 switch positions, momentary contact type, with mechanical interlocking in O position, with holder, 1 NO, 1 NO, 1 NO, 1 NO, screw terminal



product brand name	SIRIUS ACT
product designation	Coordinate switches
design of the product	Complete unit
product type designation	3SU1
product line	Plastic, black, 22 mm
manufacturer's article number	
● of supplied contact module at position 1	3SU1400-1AA10-1BA0
● of supplied contact module at position 2	3SU1400-1AA10-1BA0
● of supplied contact module at position 3	3SU1400-1AA10-1BA0
● of supplied contact module at position 4	3SU1400-1AA10-1BA0
● of the supplied holder	3SU1550-0BA10-0AA0
● of the supplied actuator	3SU1000-7BF10-0AA0
Enclosure	
shape of the enclosure front	round
Actuator	
design of the actuating element	with mechanical interlocking
principle of operation of the actuating element	momentary contact type
direction of actuation	horizontal / vertical
product extension optional light source	No
color of the actuating element	black
material of the actuating element	plastic
shape of the actuating element	Extended handle
outer diameter of the actuating element	30.5 mm
number of contact modules	4
type of unlocking device	push-to-unlatch mechanism
number of switching positions	4
Maximum deflection angle [°]	30°
Front ring	
product component front ring	Yes
design of the front ring	high
material of the front ring	plastic
color of the front ring	black
Holder	
material of the holder	Plastic
General technical data	
product function positive opening	No
insulation voltage rated value	500 V

Subject to change without notice
© Copyright Siemens

chanhvinh.com

degree of pollution	3
type of voltage of the operating voltage	AC/DC
surge voltage resistance rated value	6 kV
protection class IP	IP65, IP67
● of the terminal	IP20
shock resistance	
● **according to IEC 60068-2-27**	sinusoidal half-wave 15g / 11 ms
vibration resistance	
● **according to IEC 60068-2-6**	10 ... 500 Hz: 5g
operating frequency maximum	2 400 1/h
mechanical service life (operating cycles)	
● as operating period per direction of actuation typical	500 000
electrical endurance (operating cycles) typical	10 000 000
electrical endurance (operating cycles) with contactors 3RT1015 to 3RT1026 typical	10 000 000
thermal current	10 A
reference code according to IEC 81346-2	S
continuous current of the C characteristic MCB	10 A; for a short-circuit current smaller than 400 A
continuous current of the quick DIAZED fuse link	10 A
continuous current of the DIAZED fuse link gG	10 A
Substance Prohibitance (Date)	10/01/2014
operating voltage	
● at AC	
— at 50 Hz rated value	5 ... 500 V
— at 60 Hz rated value	5 ... 500 V
● at DC rated value	5 ... 500 V
Power Electronics	
contact reliability	One maloperation per 100 million (17 V, 5 mA), one maloperation per 10 million (5 V, 1 mA)
Auxiliary circuit	
design of the contact of auxiliary contacts	Silver alloy
number of NC contacts for auxiliary contacts	0
number of NO contacts for auxiliary contacts	4
Connections/ Terminals	
type of electrical connection of modules and accessories	Screw-type terminal
type of connectable conductor cross-sections	
● solid with core end processing	2x (0.5 ... 0.75 mm²)
● solid without core end processing	2x (1.0 ... 1.5 mm²)
● finely stranded with core end processing	2x (0.5 ... 1.5 mm²)
● finely stranded without core end processing	2x (1,0 ... 1,5 mm²)
● for AWG cables	2x (18 ... 14)
tightening torque of the screws in the bracket	1 ... 1.2 N·m
tightening torque for auxiliary contacts with screw-type terminals	0.8 ... 1 N·m
Safety related data	
proportion of dangerous failures	
● with low demand rate according to SN 31920	20 %
● with high demand rate according to SN 31920	20 %
B10 value with high demand rate according to SN 31920	250 000
failure rate [FIT] with low demand rate according to SN 31920	100 FIT
IEC 61508	
T1 value for proof test interval or service life according to IEC 61508	20 a
Ambient conditions	
ambient temperature	
● during operation	-25 ... +70 °C
● during storage	-40 ... +80 °C
environmental category during operation according to IEC 60721	3M6, 3S2, 3B2, 3C3, 3K6 (with relative air humidity of 10 ... 95%, no condensation in operation permitted for all devices behind front panel)
Environmental footprint	
Environmental Product Declaration(EPD)	Yes
Global Warming Potential [CO2 eq] total	0.787 kg

Subject to change without notice
© Copyright Siemens

chanhvinh.com

Global Warming Potential [CO2 eq] during manufacturing	0.566 kg
Global Warming Potential [CO2 eq] during operation	0.235 kg
Global Warming Potential [CO2 eq] after end of life	-0.015 kg
Siemens Eco Profile (SEP)	Siemens EcoTech

Installation/ mounting/ dimensions

fastening method	front plate mounting
• of modules and accessories	Front plate mounting
height	40 mm
width	40 mm
shape of the installation opening	round
mounting diameter	22.3 mm
positive tolerance of installation diameter	0.4 mm
mounting height	75.6 mm
installation width	30.5 mm
installation depth	53.7 mm

Approvals Certificates

General Product Approval

Confirmation

Test Certificates

Special Test Certificate

Type Test Certificates/Test Report

other

Confirmation

Environment

Environmental Confirmations

Further information

Information on the packaging
https://support.industry.siemens.com/cs/ww/en/view/109813875
Information- and Downloadcenter (Catalogs, Brochures,…)
https://www.siemens.com/ic10
Industry Mall (Online ordering system)
https://mall.industry.siemens.com/mall/en/en/Catalog/product?mlfb=3SU1100-7BF10-1QA0
Cax online generator
http://support.automation.siemens.com/WW/CAXorder/default.aspx?lang=en&mlfb=3SU1100-7BF10-1QA0
Service&Support (Manuals, Certificates, Characteristics, FAQs,...)
https://support.industry.siemens.com/cs/ww/en/ps/3SU1100-7BF10-1QA0
Image database (product images, 2D dimension drawings, 3D models, device circuit diagrams, EPLAN macros, ...)
http://www.automation.siemens.com/bilddb/cax_de.aspx?mlfb=3SU1100-7BF10-1QA0&lang=en

Subject to change without notice
© Copyright Siemens

chanhvinh.com

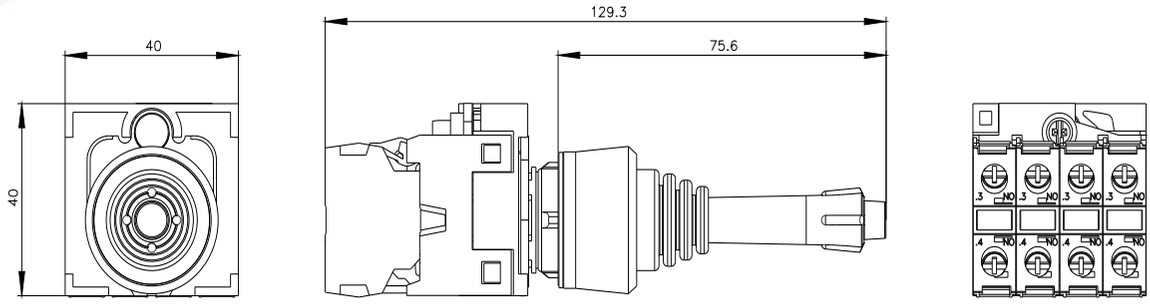

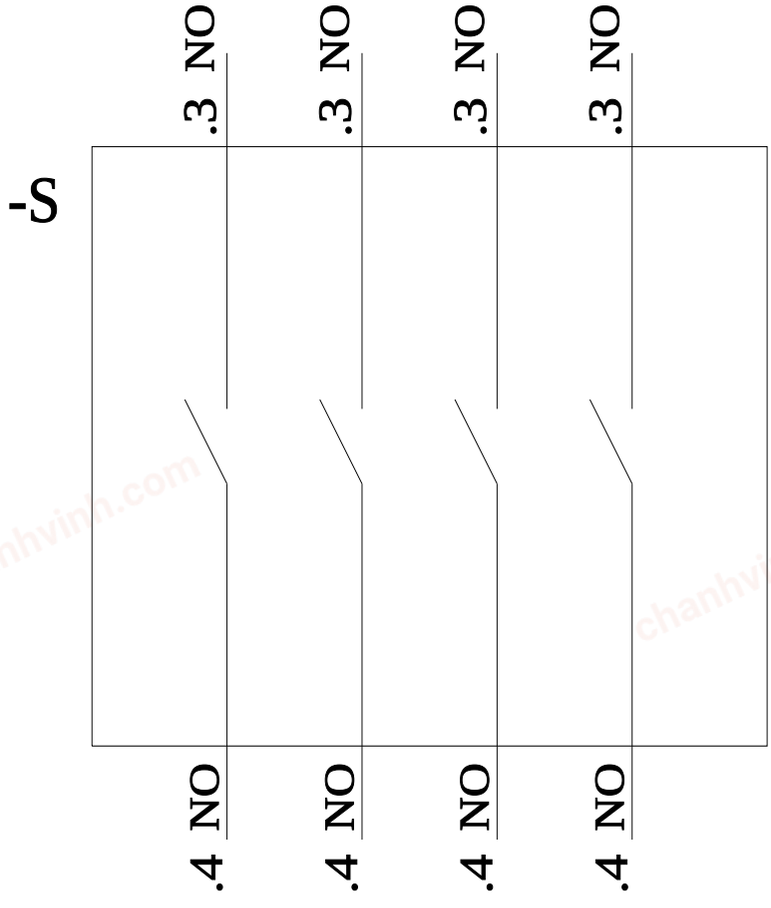

last modified: 2/7/2024

Subject to change without notice
© Copyright Siemens

chanhvinh.com

Subject to change without notice
© Copyright Siemens