chanhvinh.com

SIEMENS

Data sheet 3SU1000-7AF10-0AA0

Siemens EcoTech

Coordinate switch, 22 mm, round, plastic, black, 4 switch positions, momentary contact type, without mechanical interlocking



product brand name	SIRIUS ACT
product designation	Coordinate switches
design of the product	Actuating/signaling element
product type designation	3SU1
product line	Plastic, black, 22 mm
Enclosure	
number of command points	1
Actuator	
design of the actuating element	without mechanical interlock
principle of operation of the actuating element	momentary contact type
direction of actuation	horizontal / vertical
product extension optional	
● light source	No
● contact module	Yes
color of the actuating element	black
material of the actuating element	plastic
shape of the actuating element	Extended handle
outer diameter of the actuating element	30.5 mm
number of switching positions	4
Maximum deflection angle [°]	30°
Front ring	
product component front ring	Yes
design of the front ring	high
material of the front ring	plastic
color of the front ring	black
General technical data	
protection class IP	IP65, IP67
degree of protection NEMA rating	1, 2, 3, 3R, 4, 4X, 12, 13
shock resistance	
● according to IEC 60068-2-27	sinusoidal half-wave 15g / 11 ms
vibration resistance	
● according to IEC 60068-2-6	10 ... 500 Hz: 5g
operating frequency maximum	2 400 1/h
mechanical service life (operating cycles)	
● as operating period per direction of actuation typical	500 000
reference code according to IEC 81346-2	S
Substance Prohibitance (Date)	10/01/2014

Subject to change without notice
© Copyright Siemens

chanhvinh.com

Weight	0.037 kg
Safety related data	
proportion of dangerous failures	
● with low demand rate according to SN 31920	20 %
● with high demand rate according to SN 31920	20 %
B10 value with high demand rate according to SN 31920	250 000
failure rate [FIT] with low demand rate according to SN 31920	100 FIT
IEC 61508	
T1 value for proof test interval or service life according to IEC 61508	20 a
Ambient conditions	
ambient temperature	
● during operation	-25 ... +70 °C
● during storage	-40 ... +80 °C
environmental category during operation according to IEC 60721	3M6, 3S2, 3B2, 3C3, 3K6 (with relative air humidity of 10 ... 95%)
Environmental footprint	
Environmental Product Declaration(EPD)	Yes
Global Warming Potential [CO2 eq] total	0.787 kg
Global Warming Potential [CO2 eq] during manufacturing	0.566 kg
Global Warming Potential [CO2 eq] during operation	0.235 kg
Global Warming Potential [CO2 eq] after end of life	-0.015 kg
Siemens Eco Profile (SEP)	Siemens EcoTech
Installation/ mounting/ dimensions	
height	30.5 mm
width	30.5 mm
shape of the installation opening	round
mounting diameter	22.3 mm
positive tolerance of installation diameter	0.4 mm
mounting height	71.3 mm
installation width	30.5 mm
installation depth	25.6 mm

Approvals Certificates

General Product Approval					Test Certificates
CE EG-Konf.	UKCA	Confirmation	cULus	EAC	Type Test Certificates/Test Report

Test Certificates	other	Environment		
Special Test Certificate	Confirmation	EPD	Siemens EcoTech	Environmental Confirmations

Further information

Information on the packaging
https://support.industry.siemens.com/cs/ww/en/view/109813875
Information- and Downloadcenter (Catalogs, Brochures,…)
https://www.siemens.com/ic10
Industry Mall (Online ordering system)
https://mall.industry.siemens.com/mall/en/en/Catalog/product?mlfb=3SU1000-7AF10-0AA0
Cax online generator
http://support.automation.siemens.com/WW/CAXorder/default.aspx?lang=en&mlfb=3SU1000-7AF10-0AA0
Service&Support (Manuals, Certificates, Characteristics, FAQs,...)
https://support.industry.siemens.com/cs/ww/en/ps/3SU1000-7AF10-0AA0
Image database (product images, 2D dimension drawings, 3D models, device circuit diagrams, EPLAN macros, ...)
http://www.automation.siemens.com/bilddb/cax_de.aspx?mlfb=3SU1000-7AF10-0AA0&lang=en

Subject to change without notice
© Copyright Siemens

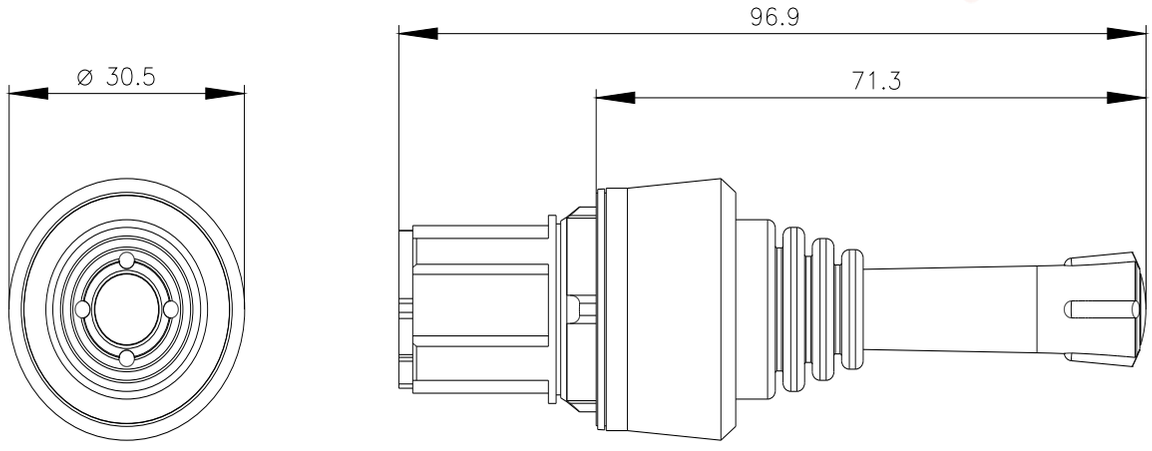

last modified: 2/6/2024

Subject to change without notice
© Copyright Siemens