chanhvinh.com

SIEMENS

Data sheet 3RF2050-1AA45



Semiconductor relay, 1-phase 3RF2 Overall width 45 mm, 50 A 48-600 V / 4-30 V DC screw terminal Blocking voltage 1200 V

product brand name	SIRIUS
product designation	solid-state relay
design of the product	single-phase
product type designation	3RF20
General technical data	
product function	zero-point switching
power loss [W] for rated value of the current	
● at AC in hot operating state	66 W
● at AC in hot operating state per pole	66 W
● without load current share typical	0.5 W
insulation voltage rated value	600 V
type of voltage	
● of the operating voltage	AC
● of the control supply voltage	DC
shock resistance according to IEC 60068-2-27	15g / 11 ms
vibration resistance according to IEC 60068-2-6	2g
reference code according to EN 61346-2	Q
reference code according to IEC 81346-2	Q
Substance Prohibitance (Date)	05/28/2009
Main circuit	
number of poles for main current circuit	1
number of NO contacts for main contacts	1
number of NC contacts for main contacts	0
type of voltage of the operating voltage	AC
operating voltage	
● at AC	
— at 50 Hz rated value	48 ... 600 V
— at 60 Hz rated value	48 ... 600 V
operating frequency rated value	50 ... 60 Hz
relative symmetrical tolerance of the operating frequency	10 %
operating range relative to the operating voltage at AC	
● at 50 Hz	40 ... 660 V
● at 60 Hz	40 ... 660 V
operational current	
● at AC-51 rated value	50 A
● according to UL 508 rated value	50 A
ampacity maximum	50 A
operational current minimum	500 mA
rate of voltage rise at the thyristor for main contacts maximum permissible	1 000 V/µs

Subject to change without notice
© Copyright Siemens

chanhvinh.com

blocking voltage at the thyristor for main contacts maximum permissible	1 200 V
reverse current of the thyristor	10 mA
derating temperature	40 °C
surge current resistance rated value	600 A
I2t value maximum	1 800 A²·s
Control circuit/ Control	
type of voltage of the control supply voltage	DC
control supply voltage 1	
● at DC rated value	30 V
● at DC	4 ... 30 V
control supply voltage	
● at DC initial value for signal <1> detection	4 V
● at DC full-scale value for signal<0> recognition	1 V
control current at minimum control supply voltage	
● at DC	13 mA
control current at DC rated value	15 mA
ON-delay time	1 ms; additionally max. one half-wave
OFF-delay time	1 ms; additionally max. one half-wave
Auxiliary circuit	
number of NC contacts for auxiliary contacts	0
number of NO contacts for auxiliary contacts	0
number of CO contacts for auxiliary contacts	0
Installation/ mounting/ dimensions	
fastening method	screw fixing
● side-by-side mounting	Yes
design of the thread of the screw for securing the equipment	M4
tightening torque of fixing screw maximum	1.5 N·m
tightening torque [lbf·in] of fixing screw maximum	13 lbf·in
height	58 mm
width	45 mm
depth	48 mm
Connections/ Terminals	
product component removable terminal for auxiliary and control circuit	Yes
type of electrical connection	
● for main current circuit	screw-type terminals
● for auxiliary and control circuit	screw-type terminals
type of connectable conductor cross-sections	
● for main contacts	
— solid	2x (1.5 ... 2.5 mm²), 2x (2.5 ... 6 mm²)
— finely stranded with core end processing	2x (1 ... 2.5 mm²), 2x (2.5 ... 6 mm²), 1x 10 mm²
● for AWG cables for main contacts	2x (14 ... 10)
connectable conductor cross-section for main contacts	
● solid or stranded	1.5 ... 6 mm²
● finely stranded with core end processing	1 ... 10 mm²
type of connectable conductor cross-sections	
● for auxiliary and control contacts	
— solid	1x (0.5 ... 2.5 mm²), 2x (0.5 ... 1.0 mm²)
— finely stranded with core end processing	1x (0.5 ... 2.5 mm²), 2x (0.5 ... 1.0 mm²)
— finely stranded without core end processing	1x (0.5 ... 2.5 mm²), 2x (0.5 ... 1.0 mm²)
● for AWG cables for auxiliary and control contacts	1x (AWG 20 ... 12)
AWG number as coded connectable conductor cross section for main contacts	14 ... 10
tightening torque	
● for main contacts with screw-type terminals	2 ... 2.5 N·m
● for auxiliary and control contacts with screw-type terminals	0.5 ... 0.6 N·m
tightening torque [lbf·in]	
● for main contacts with screw-type terminals	7 ... 10.3 lbf·in
● for auxiliary and control contacts with screw-type	4.5 ... 5.3 lbf·in

Subject to change without notice
© Copyright Siemens

chanhvinh.com

terminals	
design of the thread of the connection screw	
● for main contacts	M4
● of the auxiliary and control contacts	M3
stripped length of the cable	
● for main contacts	10 mm
● for auxiliary and control contacts	7 mm
Safety related data	
protection class IP on the front according to IEC 60529	IP20
touch protection on the front according to IEC 60529	finger-safe, for vertical contact from the front
Ambient conditions	
installation altitude at height above sea level maximum	1 000 m
ambient temperature	
● during operation	-25 ... +60 °C
● during storage	-55 ... +80 °C
Electromagnetic compatibility	
conducted interference	
● due to burst according to IEC 61000-4-4	2 kV / 5 kHz behavior criterion 2
● due to conductor-earth surge according to IEC 61000-4-5	2 kV behavior criterion 2
● due to conductor-conductor surge according to IEC 61000-4-5	1 kV behavior criterion 2
● due to high-frequency radiation according to IEC 61000-4-6	140 dBuV in the frequency range 0.15 ... 80 MHz, behavior criterion 1
field-based interference according to IEC 61000-4-3	80 MHz ... 1 GHz 10 V/m, behavior criterion 1
electrostatic discharge according to IEC 61000-4-2	4 kV contact discharging / 8 kV air discharging, behavior criterion 2
conducted HF interference emissions according to CISPR11	Class A for industrial environment
field-bound HF interference emission according to CISPR11	Class B for the domestic, business and commercial environments
Short-circuit protection, design of the fuse link	
manufacturer's article number	
● of gS fuse for semiconductor protection at NH design usable	3NE1802-0; These fuses have a smaller rated current than the semiconductor relays
● of full range R fuse link for semiconductor protection at cylindrical design usable	5SE1335; These fuses have a smaller rated current than the semiconductor relays
● of back-up R fuse link for semiconductor protection at NH design usable	3NE8017-1
● of back-up R fuse link for semiconductor protection at cylindrical design 14 x 51 mm usable	3NC1450
● of back-up R fuse link for semiconductor protection at cylindrical design 22 x 58 mm usable	3NC2250
manufacturer's article number of the gG fuse	
● at NH design usable	3NA6807; These fuses have a smaller rated current than the semiconductor relays
● at cylindrical design 22 x 58 mm usable	3NW6205-1; These fuses have a smaller rated current than the semiconductor relays
manufacturer's article number	
● of NEOZED fuse usable	5SE2320; These fuses have a smaller rated current than the semiconductor relays

Certificates/ approvals

General Product Approval				EMC	Declaration of Conformity
CSA	Confirmation	UR	EAC	RCM	UK CA

Declaration of Conformity	Test Certificates	other
EG-Konf.	Type Test Certificates/Test Report	Confirmation

Subject to change without notice
© Copyright Siemens

chanhvinh.com

Further information

Siemens has decided to exit the Russian market (see here).
https://press.siemens.com/global/en/pressrelease/siemens-wind-down-russian-business
Siemens is working on the renewal of the current EAC certificates.
Please contact your local Siemens office on the status of validity of the EAC certification if you intend to import or offer to supply these products to an EAC relevant market (other than the sanctioned EAEU member states Russia or Belarus).
Information on the packaging
https://support.industry.siemens.com/cs/ww/en/view/109813875
Information- and Downloadcenter (Catalogs, Brochures,…)
https://www.siemens.com/ic10
Industry Mall (Online ordering system)
https://mall.industry.siemens.com/mall/en/en/Catalog/product?mlfb=3RF2050-1AA45
Cax online generator
http://support.automation.siemens.com/WW/CAXorder/default.aspx?lang=en&mlfb=3RF2050-1AA45
Service&Support (Manuals, Certificates, Characteristics, FAQs,...)
https://support.industry.siemens.com/cs/ww/en/ps/3RF2050-1AA45
Image database (product images, 2D dimension drawings, 3D models, device circuit diagrams, EPLAN macros, ...)
http://www.automation.siemens.com/bilddb/cax_de.aspx?mlfb=3RF2050-1AA45&lang=en

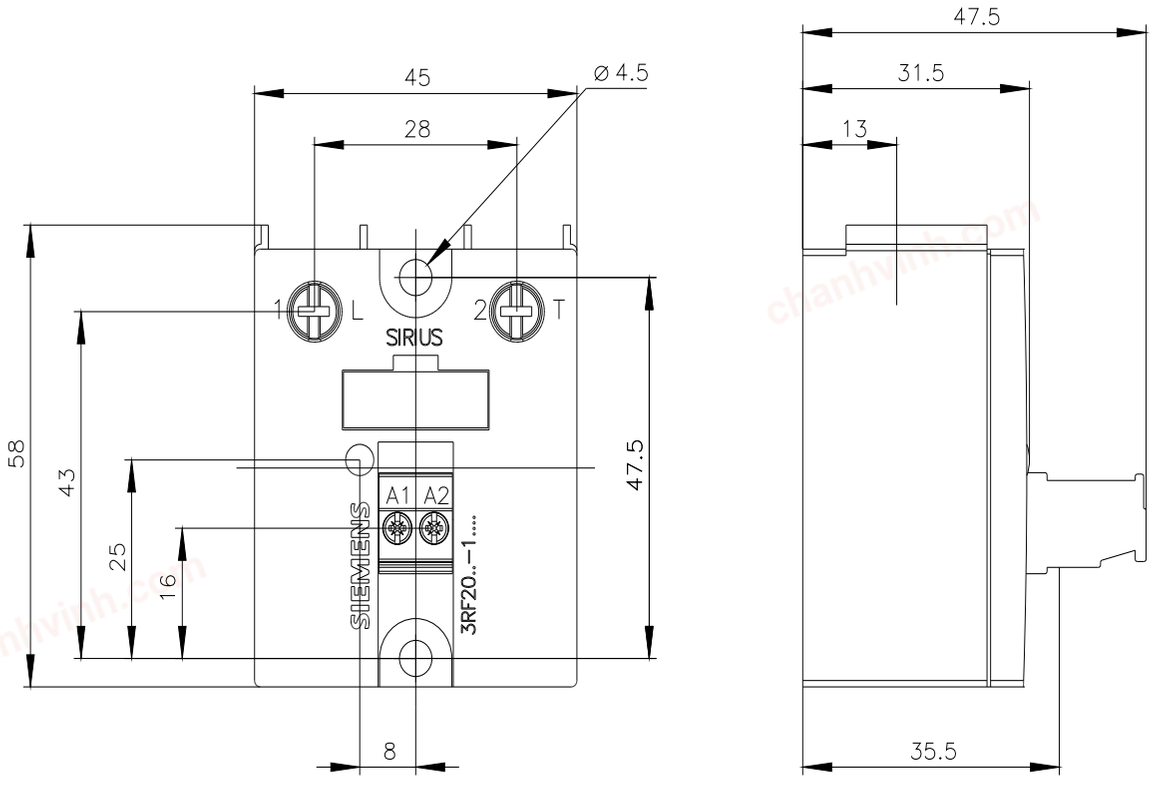

Subject to change without notice
© Copyright Siemens

chanhvinh.com

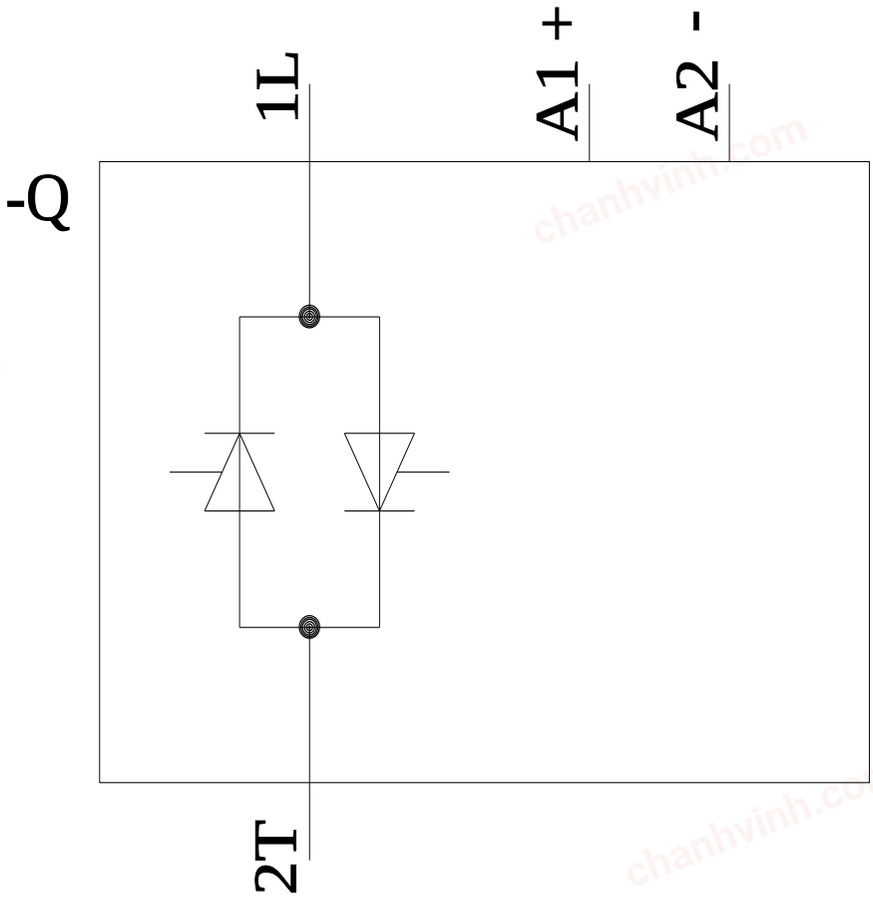

last modified: 8/29/2023

Subject to change without notice
© Copyright Siemens