chanhvinh.com

SIEMENS

Data sheet 3NW7511-5HG



SENTRON, fuse holder, Class J, 1-pole, In: 60 A, Un AC: 600 V, for mounting on DIN rail, respect national installation rules!

Model	
product brand name	SENTRON
product designation	Fuse holder
design of the product	Mounting on DIN rail
General technical data	
number of poles	1
size of fuse link	Class J
Supply voltage	
operating voltage	
● at AC rated value	600 V
protection class IP	IP20
Mechanical Design	
height	118 mm
width	40 mm
depth	82 mm
net weight	182 g
Certificates	
reference code according to IEC 81346-2	F
Approvals Certificates	

General Product Approval	other	Environment
UL EAC	Confirmation	Environmental Confirmations

Further information

Information on the packaging
https://support.industry.siemens.com/cs/ww/en/view/109813875
Information- and Downloadcenter (Catalogs, Brochures,…)
http://www.siemens.com/lowvoltage/catalogs
Industry Mall (Online ordering system)
https://mall.industry.siemens.com/mall/en/en/Catalog/product?mlfb=3NW7511-5HG
Service&Support (Manuals, Certificates, Characteristics, FAQs,...)
https://support.industry.siemens.com/cs/ww/en/ps/3NW7511-5HG
Image database (product images, 2D dimension drawings, 3D models, device circuit diagrams, ...)
http://www.automation.siemens.com/bilddb/cax_en.aspx?mlfb=3NW7511-5HG
CAx-Online-Generator
http://www.siemens.com/cax
Tender specifications
http://www.siemens.com/specifications

Subject to change without notice
© Copyright Siemens

chanhvinh.com

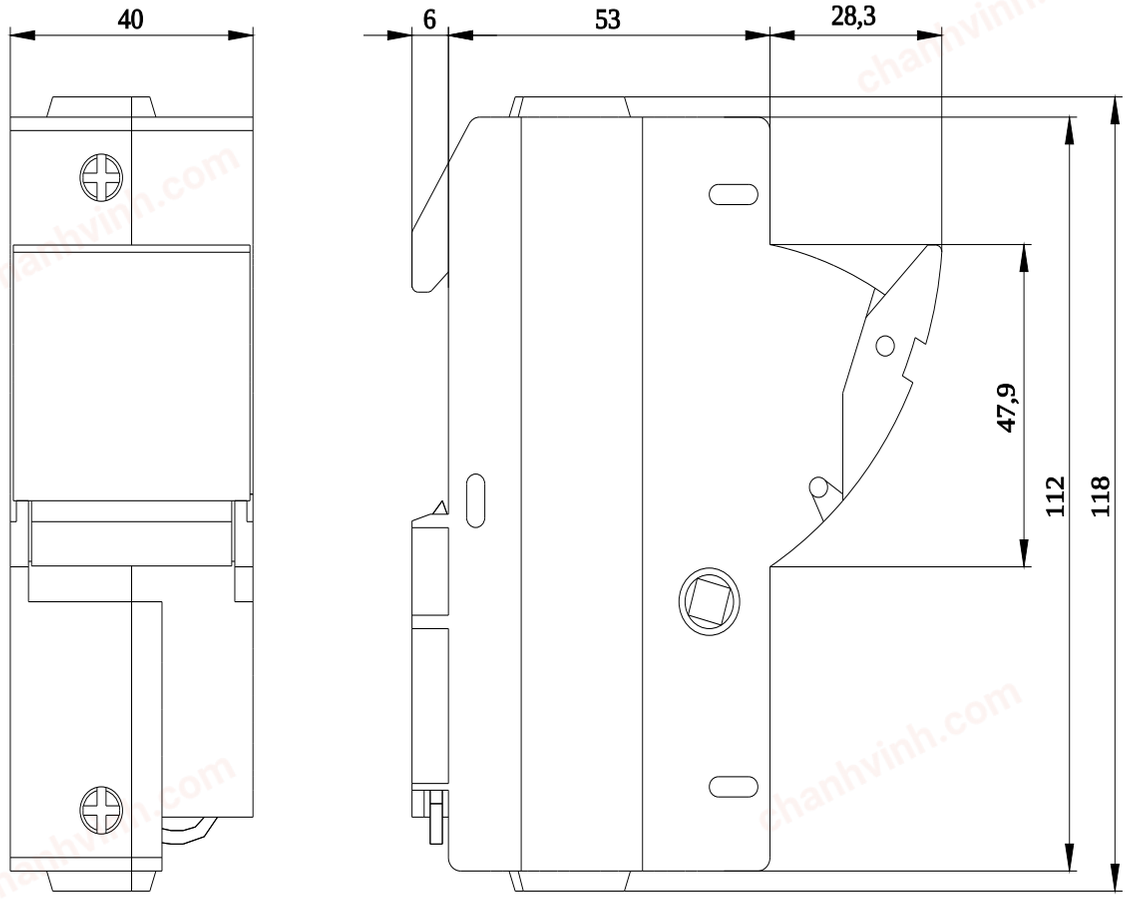

last modified: 4/11/2025

Subject to change without notice
© Copyright Siemens

chanhvinh.com

Subject to change without notice
© Copyright Siemens