chanhvinh.com

SIEMENS

Data sheet 3NB1721-0KK13



SITOR fuse size 00 63A aR 440V dc/700V VSI 500V dc UL @MBC 6xIn screw connection M10 80mm brackets

Model	
product brand name	SENTRON
product designation	SITOR fuse link
design of the product	with angle connector
design of an identification indicator	with front indicator
design of the switching contact	M10 80 mm angle connector
design of the fuse link	SITOR, LV HRC design
General technical data	
size of fuse system according to EN 60269-1	NH00
operating class of the fuse link	aR
type of voltage of the operating voltage	DC
Supply voltage	
supply voltage	
● at DC	440 V
Breaking Capacity	
switching capacity current	
● at DC according to IEC 60947-2 rated value	100 kA
● according to IEC 60947-2 rated value	100 kA
Dissipation	
power loss [W]	18.5 W
power loss [W]	
● for rated value of the current at AC in hot operating state per pole	18.5 W
● maximum	18.5 W
Product details	
product description	with bolt-on links, silver-plated
accessories included	no
Mechanical Design	
mounting position	Any, preferably vertical
net weight	205 g
Environmental conditions	
ambient temperature during operation	
● minimum	-20 °C
● maximum	50 °C
environmental category	-20 to +50 at 95% relative humidity
Approvals Certificates	

General Product Approval	other	Environment

Subject to change without notice
© Copyright Siemens

chanhvinh.com

Confirmation

Environmental Confirmations

Further information

Information on the packaging
https://support.industry.siemens.com/cs/ww/en/view/109813875
Information- and Downloadcenter (Catalogs, Brochures,…)
http://www.siemens.com/lowvoltage/catalogs
Industry Mall (Online ordering system)
https://mall.industry.siemens.com/mall/en/en/Catalog/product?mlfb=3NB1721-0KK13
Service&Support (Manuals, Certificates, Characteristics, FAQs,...)
https://support.industry.siemens.com/cs/ww/en/ps/3NB1721-0KK13
Image database (product images, 2D dimension drawings, 3D models, device circuit diagrams, ...)
http://www.automation.siemens.com/bilddb/cax_en.aspx?mlfb=3NB1721-0KK13
CAx-Online-Generator
http://www.siemens.com/cax
Tender specifications
http://www.siemens.com/specifications

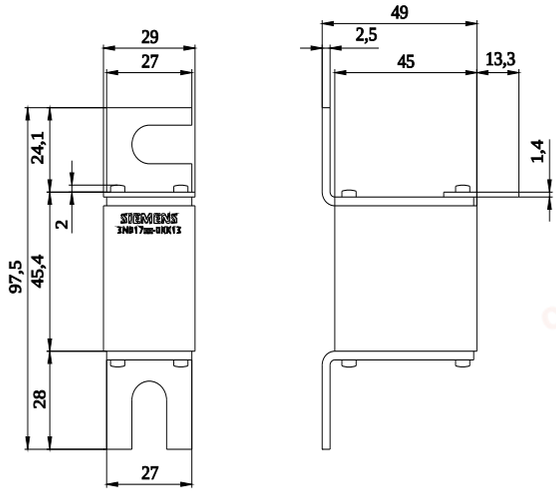

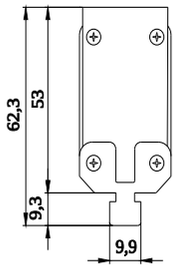

last modified: 5/24/2025

Subject to change without notice
© Copyright Siemens

chanhvinh.com

Subject to change without notice
© Copyright Siemens